**COUNTY OF McHENRY**
**McHENRY COUNTY ADMINISTRATION BUILDING**
**PURCHASING DEPARTMENT – ROOM 200**
**2200 N. SEMINARY AVENUE**
**WOODSTOCK, IL 60098**

Sealed bids will be accepted in the above office until

***January 7, 2014 at 2:00 P.M.(CST)***

**For**

# BID #14-03

# *Installation of Pre-Purchased Air-Cooled Chillers*

CONTACT PERSON – DONALD A. GRAY, CPPB
DIRECTOR OF PURCHASING
MCHENRY COUNTY ADMINISTRATION BUILDING
2200 N. SEMINARY AVENUE-- ROOM 200
WOODSTOCK, IL 60098
Phone - (815) 334-4818
Fax - (815) 334-4680

| | |
|---|---|
| COMPANY | DATE |
| CONTACT PERSON | |
| ADDRESS | E-MAIL ADDRESS |
| CITY, STATE AND ZIP | |
| TELEPHONE NO | FAX NO. |
| FEIN, or Social Security NUMBER | |

The attention of bidders is directed to the McHenry County Purchasing Ordinance, approved December 1, 2006. This Ordinance is incorporated by reference into this bid as if it were contained herein. If you have not received a copy of the above Ordinance and desire a copy, please contact the office of the Director of Purchasing.

## SCOPE OF WORK

*Installation of Pre-Purchased Air-Cooled Chillers*, subject to continuing need and availability of funds. Bid per specifications contained herein.

## SCHEDULE OF EVENTS

| | |
|---|---|
| December 4, 2013---------- | Bid Available |
| December 11, 2013---------- | ***MANDATORY Pre-Bid, onsite Meeting*** located at 667 Ware Road, Room 200 Purchasing Conference Room, Woodstock, Illinois 60098 @ 9:00 AM |
| December 17, 2013-- ---------- | Vendors Questions Submitted via fax to 815-334-4680 by 4:00 P.M.(CST) |
| December 20, 2013---------- | Vendors Questions Answered via fax and Posted on Website by 4:00 P.M.(CST) |
| January 7, 2014---------- | Bid due in Purchasing at 2:00 P.M.(CST) |

## PAYMENT

Payment will be processed after receipt of delivery invoice and appropriate affidavit.

## NON-DISCRIMINATION

Contractor shall comply with the Illinois Human Rights Act, 775 ILCS 5/1-101 et seq., as amended and any rules and regulations promulgated in accordance therewith, including, but not limited to the Equal Employment Opportunity Clause, Illinois Administrative Code, Title 44, Part 750 (Appendix A), 775 ILCS 5/1-102, which is incorporated herein by reference, and constituting of a written EEO Policy and a workforce profile that demonstrates its EEO practices. Furthermore, the Contractor shall comply the Public Works Employment Discrimination Act, 775 ILCS 10/0.01 et seq., as amended. The Contractor must have a written sexual harassment policy, which meets Illinois State Statutes, 775 ILCS, 15/3.

## PREVAILING WAGE

The State of Illinois requires that all wages paid by the Contractor and each subcontractor shall be in compliance with The Prevailing Wage Act (820 ILCS 130), as amended. This requires payment of the general prevailing rate for each craft or type of worker, including payment of the general prevailing rate for legal holiday and overtime work. The Illinois Department of Labor publishes the prevailing wage rates on its website at www.state.il.us/agency/idol/rates.htm. The Contractor shall review the wage rates applicable to the work of the contract at regular intervals in order to ensure the timely payment of current wage rates. The Contractor agrees that no additional notice is required. The Contractor shall be responsible to notify each subcontractor of the wage rates set forth in this contract and any revisions thereto. A copy of the prevailing wage rates is posted on the McHenry County website at www.co.mchenry.il.us under BIDS and RFP's. If wage rates change during the course of the project, the new rates will be available in the County of McHenry Purchasing Office. Vendors may access the Illinois Department of Labor website for updates www.state.il.us/agency/idol.

## CERTIFIED PAYROLL REQUIREMENTS (Public Act 94-0515)

Effective August 10, 2005 contractors and subcontractors on public works projects must submit certified payroll records on a monthly basis to the public body in charge of the construction project,

along with a statement affirming that such records are true and accurate, that the wages paid to each worker are not less than the required prevailing rate and that the contractor is aware that filing records he or she knows to be false is a Class B misdemeanor.

The certified payroll records must include for every worker employed on the public works project the name, address, telephone number, social security number, job classification, hourly wages paid in each pay period, number of hours worked each day, and starting and ending time of work each day. These certified payroll records are considered public records and public bodies must make these records available to the public under the Freedom of Information Act, with the exception of the employee's address, telephone number and social security number. Any contractor who fails to submit a certified payroll or knowingly files a false certified payroll is guilty of a Class B misdemeanor.

## INCREASED PENALTIES FOR PREVAILING WAGE VIOLATIONS (Public Act 94-0488)

Effective January 1, 2006, penalties for violations of the Prevailing Wage Act will increase from 20% to 50% of the underpaid amounts for second or subsequent violations. An additional penalty of 5% of the underpayment penalty must be paid to workers for each month the wages remain unpaid (up from the current 2% penalty).

For violations that occur after January 1, 2006, the debarment period --during which contractors are ineligible for public works contracts -increases from 2 years to 4 years if two notices of violation are issued/serious violations occur within a 5-year period. In addition, a new monetary penalty of $5,000 may be assessed against contractors who retaliate against employees who report violations or file complaints under the Prevailing Wage Act.

## OSHA REQUIREMENTS

The Occupational Safety and Health Act of 1970 (OSHA) “guarantees workers the right to a safe and healthful workplace”. Under Section 5(a) (1) of the OSHA Act, the employer must “furnish to each of his employees’ employment and a place of employment which are free from recognized hazards that are causing or likely to cause death or serious physical harm to his employees.”

There are times when the County must hire entitles and individuals (contractors) to perform services. To this end, contractors hired by the County of McHenry must perform their duties in a manner that is complaint with all state and federal health and safety laws and industry guidelines. It is the responsibility of the contractor to ensure that their personnel and subcontractors comply with all state and federal health and safety laws and regulations and industry guidelines, including, but not limited to those set forth by: OSHA and related regulations, the Safety Inspection and Education Act, the Health and Safety Act, the National Institute of Occupational Safety and Health, the National Fire Protection Association, the Centers for Disease Control, American Industrial Hygiene Association, the American Council of Governmental Industrial Hygienists, the Environmental Protection Agency, and the Department of Transportation.

## SUBSTANCE ABUSE PREVENTION ON PUBLIC WORKS PROJECTS ACT

The successful bidder must be in compliance with State of Illinois HB-1855 (Public Act095-0635), which amends the Prevailing Wage Act. Before an employer commences work on a public works project, the employer shall have in place a written program, which meets or exceeds the program requirements in this Act, to be filed with the public body engaged in the construction of the public works and made available to the general public, for the prevention of substance abuse among its employees. The testing must be performed by a laboratory that is certified for Federal Workplace Drug Testing Programs by the Substance Abuse and Mental Health Service Administration of the U.S. Department of Health and Human Services.

## PROCUREMENT OF GREEN PRODUCTS AND TECHNOLOGIES

As approved by the McHenry County Board in April 2008, it is in the interest of public health, safety and welfare and the conservation of energy and natural resources to use and promote

environmentally responsible products. The County should strive to influence private purchases through the example of using government specifications and standards that are green or environmentally friendly when making its purchases.

Whenever available and cost-justified, the County should purchase those materials including the purchase of recycled products containing post-consumer materials rather than residual materials resulting from the processing or manufacturing from another product. To the extent practicable, all products standards shall emphasize functional or performance criteria, which do not discriminate against the use of, recycled materials.

McHenry County should cooperate to the greatest extent feasible with other governments and organizations to develop a comprehensive, consistent, and effective procurement effort intended to stimulate the market for recycled products, reusable products, products designed to be recycled, and other environmentally responsible products.

McHenry County shall continue to participate in and shall encourage other public jurisdictions to participate with the County in the purchase of products containing recycled content. Participation in such cooperative systems shall be aimed at obtaining maximum practical recycled content in County purchases, to obtain best available price for products with recycled content, to facilitate or encourage lower prices industry-wide and to encourage development of industries and markets dealing with recycled content products.

## PROCUREMENT OF PRODUCTS THAT ARE ENERGY STAR QUALIFIED

McHenry County shall select, where life cycle and cost-effective, ENERGY STAR and other energy efficient products, when acquiring energy-using products. This information will be required by the bidder in their bid submittal.

## SECURITY

The contractor represents and warrants to the County of McHenry that neither it nor any of its principals, shareholders, members, partners or affiliates, as applicable, is a person or entity named as a Specially Designated National and Blocked Person (as defined in Presidential Executive Order 13224) and that it is not acting, directly or indirectly, for or on behalf of a Specially Designated National and Blocked Person. The Contractor further represents and warrants to the County of McHenry that the Contractor and its principals, shareholders, members, partners, or affiliates, as applicable, are not directly or indirectly, engaged in, and are not facilitating, the transactions contemplated by this Agreement on behalf of any person or entity named as Specially Designated National and Blocked Person. The Contractor hereby agrees to defend, indemnify and hold harmless the County of McHenry, the Corporate Authorities, and all County of McHenry elected or appointed officials, officers, employees, agents, representatives, engineers and attorneys, from and against any and all claims, damages, losses, risks, liabilities, and expenses (including reasonable attorneys' fees and costs) arising from or related to any breach of the foregoing representation and warranties.

## PURCHASE EXTENSION

This contract shall be offered for purchases to be made by other counties and governmental units within the State of Illinois as authorized by the Government Joint Purchasing Act. All purchases and payments made under this authority shall be made directly by the governmental unit to the Vendor. The County of McHenry shall not be responsible in any way for such purchase orders or payments. All terms and conditions of this contract shall apply to all orders placed by another governmental unit.

## ADDENDUM

Should the Vendor require any additional information about this Bid, please fax to Purchasing (815-334-4680) any questions by the deadline as outlined in the schedule of events. ANY AND ALL changes to these specifications are valid only if they are included by Written Addendum to All Bidders. NO interpretation of the meaning of the plans, specifications, or other contract

documents will be made orally. If required, all addenda will be faxed to bidder if a Notice of Intent to Bid has been completed and faxed to the Purchasing Office. In addition, all addenda are posted on the County of McHenry's website. Failure of the bidder to receive any such addendum or interpretation shall not relieve the bidder from obligation under this Bid as submitted. All addenda so issued shall become part of the bid documents. Failure to request an interpretation constitutes a waiver to later claim that ambiguities or misunderstandings caused by a bidder to improperly submit a bid.

Response to these questions will be made by means of an addendum. Only the Director of Purchasing has the authority to issue an addendum.

Addenda are written instruments issued by the County prior to the date for receipt of proposals, which modify or interpret the Bid by addition, deletions, clarifications or corrections.

Prior to the receipt of bids, addenda will be faxed or delivered to all who are known to have received a Notice to Bid. Each vendor shall ascertain prior to submitting a bid that all addenda issued have been received and, by submission of a bid, such act shall be taken to mean that such vendor has received all addenda and that the vendor is familiar with the terms thereof and understands fully the contents of the addenda.

TAXES

The County of McHenry is exempt from paying Illinois Use Tax, Illinois Retailers Occupation Tax, and Federal Excise Tax. The bidder's attention is directed to the McHenry County Purchasing Ordinance {S3-10, (9), (10), and (11)}.

INSURANCE

(1) GENERAL

The successful bidder shall maintain for the duration of the contract and any extensions thereof, at bidder's expense, insurance that includes "Occurrence" basis wording and is issued by a company or companies qualified to do business in the State of Illinois that are acceptable to the County, which generally requires that the company(ies) be assigned a Best's Rating of A or higher with a Best's financial size category of Class XIV or higher, in the following types and amounts:

(a) Commercial General Liability in a broad form, to include, but not limited to, coverage for the following where exposure exists: Bodily Injury and Property Damage, Premises/Operations, Independent contractors, Products/Completed Operations, Personal Injury and Contractual Liability; limits of liability not less than:

$500,000 per occurrence and $1,000,000 in the aggregate;

(b) Business Auto Liability to include, but not be limited to, coverage for the following where exposure exists: Owned Vehicles, Hired and Non-Owned Vehicles and Employee Non-Ownership; limits of liability not less than:

$300,000 per occurrence, combined single limit for:
Bodily Injury Liability and Property Damage Liability;

(c) Workers' Compensation Insurance to cover all employees and meet statutory limits in compliance with applicable state and federal laws. The

coverage must also include Employer's Liability with minimum limits of $100,000 for each incident.

(2) EVIDENCE OF INSURANCE

The successful bidder agrees that with respect to the above required insurance that:

(a) The County of McHenry shall be provided with Certificates of Insurance evidencing the above required insurance, prior to commencement of the contract and thereafter with certificates evidencing renewals or replacements of said policies of insurance at least fifteen (15) days prior to the expiration or cancellation of any such policies;

(b) The contractual liability arising out of the contract shall be acknowledged on the Certificate of Insurance by the insurance company;

(c) The County of McHenry shall be provided with thirty (30) days prior notice, in writing, of Notice of Cancellation or material change and said notification requirement shall be stated on the Certificate of Insurance;

(d) Subcontractors, if any, comply with the same insurance requirements. In addition to being named as an additional insured on the Certificate of Insurance, each liability policy shall contain an endorsement naming the County of McHenry as an additional insured. A copy of the endorsement shall be provided to McHenry County along with the Certificate of Insurance; and,

(e) have McHenry County named as an additional insured and the address for certificate holder must read exactly as:

County of McHenry, **a body politic**
2200 N. Seminary Avenue
Woodstock, IL 60098

(f) Insurance Notices and Certificates of Insurance shall be provided to:

McHenry County, Purchasing Department
2200 N. Seminary Avenue, Room 200
Woodstock, Illinois 60098

HOLD HARMLESS CLAUSE

The successful bidder will agree to indemnify, save harmless and defend the County of McHenry, its agents, servants, and employees, and each of them against and hold it and them harmless from any and all lawsuits, claims, demands, liabilities, losses and expenses, including court costs and attorney's fees, for or on account of any injury to any person, or any death at any time resulting from such injury, or any damage to property, which may arise or which may be alleged to have arisen out of or in connection with the work covered by this contract upon award. The foregoing indemnity shall apply except if such injury, death or damage is caused directly by the willful and wanton conduct of the County of McHenry, its agents, servants, or employees or any other person indemnified hereunder.

BID RESPONSE

It is highly recommended that the vendor completely read the bid prior to filling out to become acquainted with terms and conditions of the bid document and merchandise requirements. No relief will be allowed from the bid conditions unless you take written exception to that condition on your bid. **BIDS MUST BE SUBMITTED IN DUPLICATE FORM, (One Original, and One Copy). BIDS ARE DUE BACK BY 2:00 P.M. (CST) ON January 7, 2014.**

**SEALED BID ENVELOPES ARE TO BE CLEARLY MARKED WITH THE BID/RFP TITLE, TIME & DATE OF OPENING.**

Bidders are urged to respond to this bid request in every case to insure being maintained on current bid lists. Explanations of the reasons for not bidding will assist in maintaining the bidder on the correct bid list(s).

**SUBMITTAL**

**Submit one (1) bid, multiple bids will not be accepted.**

GENERAL CONDITIONS

This bid shall be firm for at least 120 days after the latest time specified for submission for bids and thereafter until written notice is received from the bidder.

AWARD OF ORDER

The County will award a purchase order to the lowest responsive, responsible bidder meeting the County's requirements as listed in this document. The County will be the sole judge of acceptability of any products offered.

WORKMANSHIP

Items shall be manufactured according to the highest traditions of the industry and shall meet all commercial standards of quality. The County shall be the sole judge of acceptable products. Unacceptable products will be rejected and suitable price adjustments made.

MISCELLANEOUS

It is the bidder's task to be familiar with the referenced items and to offer only products of equal or greater quality. Any questions on specifications should be directed to the Purchasing Department.

EXCEPTIONS

The bid speaks for itself. Bidders taking exception to any terms, conditions or specifications of this bid must clearly state in writing such exception(s) either on or with their bid. The County will be the sole judge of the acceptability of any exception noted, and is not bound to consider any bid submitted with exceptions.

ALTERNATES

Trade names are used solely for the purpose of setting minimum standards of quality and performance and are not to be construed as exclusionary. Bidders are encouraged to contact the Purchasing Department prior to the bid opening for the purpose of clarifying specifications.

FULL PRICING AND CONTINGENCIES

The County shall hold the successful bidder to bid pricing. Additional charges for contingencies discovered by the vendor at any time after the date of opening of this bid will not be considered for payment by the County.

## RECOURSE FOR UNSATISFACTORY MATERIALS

Payment shall be contingent upon the County's inspection of and satisfaction with completed work. Any defective work or materials, non-conformance to bid specifications, damaged materials, or unsatisfactory installation shall be corrected to the County's satisfaction by the successful bidder at no additional charge.

## TERMINATION

Failure to comply with the terms and conditions as herein stated shall be cause for cancellation of the contract. The County will give written notice of unsatisfactory performance and the contractor will be allowed thirty (30) days to take corrective action and accomplish satisfactory control. If at the end of the thirty days, the County deems the contractor's performance still unsatisfactory, the contract shall be canceled. The exercise of its right of cancellations shall not limit the County's right to seek any other remedies allowed by law.

The successful bidder will agree that the resulting contract is made subject to available budgetary appropriations and shall not create any obligation on behalf of the County in excess of such appropriations. In the event that no funds or insufficient funds are appropriated and budgeted, this Contract shall terminate without penalty or expense to the County thirty (30) days after written notification of termination from the County.

The successful bidder will agree that pursuant to requirements imposed under Illinois law, the County shall have 120 days after each election of county board members to terminate this Agreement, without cause and without penalty.

## CHOICE OF LAW AND VENUE

The bidder agrees that this bid has been executed and delivered in Illinois and that their relationship and any and all disputes, controversies or claims arising under this bid or any resulting contract shall be governed by the laws of the State of Illinois, without regard to conflicts of laws principles. The bidder further agrees that the exclusive venue for all such disputes shall be the Circuit Court of the 22nd Judicial Circuit of McHenry County, Illinois, and the bidder hereby consent to the personal jurisdiction thereof.

## REJECTION OF BIDS, WAIVER OF IRREGULARITIES

McHenry County reserves the right to reject any or all bids, to waive irregularities, and to accept that bid which is considered to be in the best interest of the County. Any such decision shall be considered final.

## PROTEST PROCEDURES

Any Bidder who believes contractual terms or specifications are unnecessarily restrictive or limit competition may submit a protest, in writing, to the Director of Purchasing. To be considered, the protest must be received by McHenry County five (5) days prior to the stated bid opening. Any adversely affected or aggrieved Bidder shall have ten (10) days from the date of the bid opening to file a written protest regarding the intent to award the bid. Protests submitted after that date will not be accepted. Protests must specify the grounds upon which the protest is based (refer to appropriate statute, rule, code, or ordinance which defines the protest process).

## BIDDER'S ATTACHMENT TO THE BID

Any attachment to this bid, as required by the bid conditions, or made at the bidder's option, must reference on their face the bid title, opening date, and time.

DELIVERY

Delivery will be considered in making the award and the bidders shall state, in the spaces provided, expected delivery after receipt of Purchase Order. Failure to meet said delivery promises without prior consent of the Director of Purchasing will be considered a breach of faith.

FREIGHT

Freight is all inclusive unless otherwise stated.

FUEL SURCHARGE

The County of McHenry does NOT accept any fuel surcharges.

## SPECIFICATIONS

Please refer to the following pages (Chiller Replacement Plans, Project Manual and Exhibit A) for complete specifications.

In addition, by submitting this Bid, Bidder represents that:

- **Bidder HAS VISITED THE SITE, during the MANDATORY PRE-BID MEETING, December 11, 2013** (as shown in the BID SCHEDULE) and become familiar with and is satisfied as to the general, local and Site conditions that may affect cost, progress and performance of the Work.
- Bidder has examined and carefully studied the Bidding Documents and the other related data identified in the Bidding Documents.
- Bidder is familiar with and is satisfied as to all federal, state and local Laws and Regulations that may affect cost, progress and performance of the Work.
- Bidder is aware of the general nature of work to be performed by Owner and others at the Site that relates to the Work as indicated in the Bidding Documents.
- Bidder has correlated the information known to Bidder, information and observations obtained from visits to the Site, reports and drawings identified in the Bidding Documents, and all additional examinations, investigations, explorations, tests, studies, and data with the Bidding Documents.
- The Bidding Documents are generally sufficient to indicate and convey understanding of all terms and conditions for the performance of the Work for which this Bid is submitted.
- Bidder will submit written evidence of its authority to do business in the state where the Project is located not later than the date of its execution of the Agreement.
- This Bid is genuine and not made in the interest of or on behalf of any undisclosed individual or entity and is not submitted in conformity with any agreement or rules of any group, association, organization or corporation.
- Bidder has not directly or indirectly induced or solicited any other Bidder to submit a false or sham Bid.
- Bidder has not solicited or induced any individual or entity to refrain from bidding.
- Bidder has not sought by collusion to obtain for itself any advantage over any other Bidder or over Owner.
- The Bidder must be able to demonstrate recent successful completion of similar projects on similar building types. The County may ask the bidder to supply a list of these projects along with the names of the owner's rep for reference. This supporting documentation will be requested prior to PO issuance. Failure to demonstrate this qualification will result in the disqualification of the bid.
- ❖ Equipment pre-purchased by Owner will be assigned to the successful contractor so that, once selected, that contractor becomes (1) responsible for coordination of the installation and (2) the single construction and warranty period contact for the project thereafter. **Bidder agrees to accept, honor and acknowledge Owner's assignment of its obligations under the pre-purchase agreement.**

***Project Schedule:** Expected ship date for the chillers is late February, 2014. **Bidder shall commit to having substantial completion including startup and availability of the chillers for cooling no later than March 28, 2014**.

****Subcontractors:** **BIDDER MUST INCLUDE IN SUBMITTAL, THE SUBCONTRACTORS TO BE UTILIZED**.

# A-MOD CHILLER REPLACEMENTS
# MCHENRY COUNTY GOVERNMENT CENTER
# 2200 NORTH SEMINARY AVENUE
# WOODSTOCK, IL 60098

## LOCATION PLAN

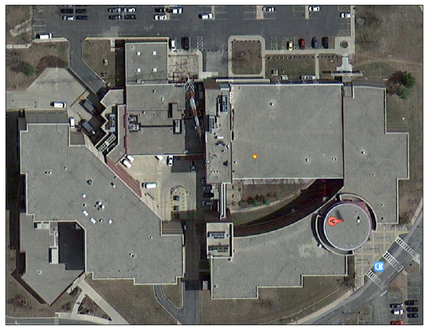

## CAMPUS PLAN

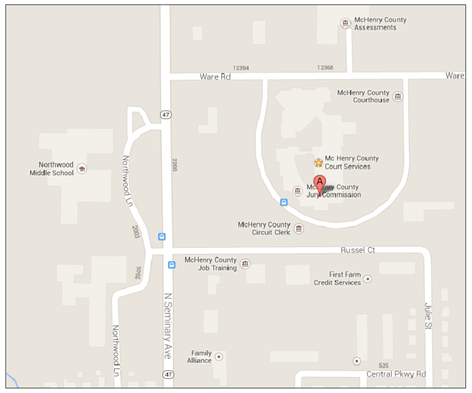


## KEY PLAN

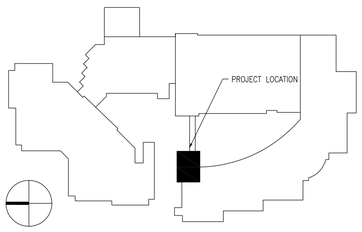


## GENERAL PROJECT NOTES

1. OWNER HAS SPECIFIC REQUIREMENTS REGARDING SITE ACCESS INCLUDING EMPLOYEE BACKGROUND CHECKS. PLEASE REFER TO FRONT END DOCUMENTS FOR ADDITIONAL INFORMATION.
2. CHILLERS ACC-A1, ACC-A2 HAVE BEEN PREPURCHASED BY THE OWNER TO FACILITATE DELIVERY TIME AND CONSTRUCTION SCHEDULE. PREPURCHASED EQUIPMENT WILL BE ASSIGNED TO THE SUCCESSFUL CONTRACTOR SO THAT ONCE SELECTED, THAT CONTRACTOR BECOMES (1) RESPONSIBLE FOR COORDINATION OF THE INSTALLATION AND (2) THE SINGLE CONSTRUCTION AND WARRANTY PERIOD CONTACT FOR THE PROJECT THEREAFTER. REFER TO PROJECT MANUAL FOR EQUIPMENT DATA, COPIES OF EQUIPMENT SHOP DRAWINGS AND ADDITIONAL INFORMATION.
3. RIGGING OF THE CHILLERS WILL NEED TO TAKE PLACE WHEN THE COURTHOUSE IS UNOCCUPIED, PREFERABLY ON A SATURDAY. STAGING AREA WILL NEED TO BE COORDINATED AND PREAPPROVED BY OWNER. PLEASE REFER TO FRONT END DOCUMENTS FOR ADDITIONAL INFORMATION.
4. OUTDOOR NOISE RELATED CONSTRUCTION SUCH AS HAMMERING, GRINDING, ETC. WILL NEED TO TAKE PLACE WHEN COURT IS NOT IN SESSION. PLEASE REFER TO FRONT END DOCUMENTS FOR ADDITIONAL INFORMATION.
5. THE MECHANICAL CONTRACTOR SHALL BE THE PRIME CONTRACTOR FOR THE PROJECT. THE MECHANICAL CONTRACTOR SHALL INCLUDE ALL COSTS ASSOCIATED WITH THE WORK OF SUB-CONTRACTORS AND THE COORDINATION AND ADMINISTRATION OF THAT WORK IN THE BID SUBMITTED.
6. TEMPERATURE CONTROLS WORK SHALL BE A SUB-CONTRACT TO THE PRIME CONTRACTOR. ALPHA CONTROLS AND SERVICES SHALL BE THE TEMPERATURE CONTROLS CONTRACTOR. CONTACT JASON VOGELBAUGH AT 217-299-1379.
7. CHEMICAL TREATMENT WORK SHALL BE A SUB-CONTRACT TO THE PRIME CONTRACTOR. CONTACT GREG GEHRKE AT GEHRKE TECHNOLOGY GROUP, 847-878-0716.
8. CONTRACTOR SHALL PROVIDE ALL TAPS FOR CONTROLS, ETC. THE PRIME CONTRACTOR SHALL COORDINATE WITH CONTROLS FOR ALL TAPS REQUIRED.
9. RELOCATE ANY DUCT, SPRINKLER, FIRE ALARM DEVICE, LIGHT, CONDUIT, PIPE, SWITCH, VENT, WIRE, ETC. REQUIRED FOR DEMOLITION OR INSTALLATION OF NEW WORK.
10. PROVIDE TESTING, ADJUSTING AND BALANCING OF WATER FLOWS AS SPECIFIED.
11. PROVIDE EQUIPMENT AND SYSTEM STARTUP AND TESTING. EACH VENDOR FOR THE CHILLERS, VFDS, CONTROLS, VIBRATION ISOLATION, AND REFRIGERANT MONITOR SYSTEM SHALL VISIT THE SITE AND PROVIDE DOCUMENTATION REPORT PER FRONT END DOCUMENTS.
12. PROVIDE WARRANTY, O&M MANUALS, RECORD AS-BUILT DRAWINGS AND ALL OTHER SPECIFIED CLOSEOUT DOCUMENTATION PER FRONT END DOCUMENTS.
13. REMOVE EVERYTHING FROM THE JOB SITE MADE OBSOLETE OR NOT NEEDED BY THIS WORK.

## GENERAL DESCRIPTION OF SCOPE OF WORK

1. THE DRAWINGS AND SPECIFICATIONS ARE THE CONTRACT DOCUMENTS AND INCLUDE THE COMPLETE SCOPE OF WORK TO BE PROVIDED. THE FOLLOWING IS A GENERAL DESCRIPTION OF THE SCOPE AND DOES NOT INCLUDE ALL SCOPE ITEMS.
2. ACCEPT ASSIGNMENT OF AND INSTALL PREPURCHASED AIR-COOLED CHILLERS AND ACCESSORIES. PROVIDE MANUFACTURER SUPERVISED INSTALLATION INCLUDING STARTUP AND STARTUP REPORTS.
3. DEMOLISH MECHANICAL AND ELECTRICAL AS NOTED. DISPOSE OF REFRIGERANT IN ACCORDANCE WITH AUTHORITY HAVING JURISDICTION. DEMOLISH CHILLERS, PUMP MOTORS, ELECTRICAL, CONTROLS, PIPES, INSULATION, AND ALL ITEMS MADE OBSOLETE BY THIS WORK. DEMOLISHED EQUIPMENT AND MATERIALS SHALL BE REMOVED FROM THE PROJECT SITE - ELEVATOR MAY BE USED AT CONTRACTOR'S OPTION TO REMOVE DEMOLISHED MATERIALS (CONFIRM WITH OWNER).
3. PROVIDE PREMIUM EFFICIENCY CHILLED WATER PUMP MOTORS AND PUMP VARIABLE FREQUENCY DRIVES.
4. MODIFY EXISTING CHILLER STRUCTURAL SUPPORTS AS REQUIRED FOR USE WITH NEW CHILLERS.
5. INSTALL VIBRATION ISOLATORS PROVIDED WITH CHILLERS.
6. RIG NEW EQUIPMENT INTO SPACE AND ONTO ROOF. CRANE LIFT CHILLERS.
7. PROVIDE NEW CHILLED WATER PIPING TO EXTEND EXISTING PIPING TO NEW CHILLERS.
8. PROVIDE INSULATION FOR CHILLERS AND CHILLED WATER PIPING. INSULATE ALL COLD SURFACES THAT MAY CONDENSE. PROVIDE ALUMINUM SERVICE JACKET FOR OUTDOOR PIPING.
9. PROVIDE CHEMICAL TREATMENT. CHEMICAL TREATMENT CONTRACTOR IS GEHRKE TECHNOLOGY GROUP CONTACT GREG GEHRKE AT 847-878-0716.
10. PROVIDE AUTOMATIC ISOLATION VALVES FOR CHILLERS.
11. PROVIDE POWER WIRING FOR THE CHILLERS, PUMP MOTORS, CONTROLS, VARIABLE FREQUENCY DRIVES, ETC.
12. EXTEND EXISTING HEAT TRACE.
13. PROVIDE CONTROLS INTEGRATION FOR CHILLERS, VARIABLE FREQUENCY DRIVES, AND AUTOMATIC ISOLATION VALVES. CONTROLS SHALL BE BY ALPHA. DEMOLISH ALL ITEMS MADE OBSOLETE BY THIS WORK. AUTOMATIC VALVES MAY BE PROVIDED BY THE PRIME CONTRACTOR. PROVIDE SENSORS AND DEVICES INTERFACED WITH THE EXISTING SYSTEM AND COLOR GRAPHICS. ALL WIRING SHALL BE IN CONDUIT.
14. CLEAN THE WORK SITE EACH EVENING.
15. PROVIDE TESTING, ADJUSTING AND BALANCING OF CHILLED WATER SYSTEM AND TESTING/STARTUP OF ALL NEW SYSTEMS AND EQUIPMENT INCLUDING THE CHILLERS, VFDS, AND CONTROLS,
16. PROVIDE CLOSEOUT DOCUMENTATION INCLUDING TRAINING, EQUIPMENT STARTUP REPORTS, TEST AND BALANCE REPORTS, WARRANTIES, ETC.

## PROJECT CODES

MCHENRY COUNTY BUILDING CODES:
2006 INTERNATIONAL BUILDING CODE WITH AMENDMENTS
2006 INTERNATIONAL MECHANICAL CODE WITH AMENDMENTS
2008 NATIONAL ELECTRICAL CODE WITH AMENDMENTS
2006 INTERNATIONAL FIRE CODE WITH AMENDMENTS
2004 ILLINOIS STATE PLUMBING CODE
2012 INTERNATIONAL ENERGY CONSERVATION CODE WITH AMENDMENTS & STATE OF ILLINOIS AMENDMENTS

## DRAWING INDEX


| | |
|---|---|
| CS | COVER SHEET |
| M0.1 | MECHANICAL SYMBOLS AND ABBREVIATIONS |
| M1.0 | PENTHOUSE MECHANICAL PLAN - DEMOLITION AND NEW WORK |
| M2.0 | ROOF MECHANICAL PLAN - DEMOLITION AND NEW WORK |
| M3.0 | MECHANICAL FLOW DIAGRAMS - DEMOLITION AND NEW WORK |
| M4.0 | MECHANICAL SCHEDULES AND TEMPERATURE CONTROLS |
| E0.1 | ELECTRICAL SYMBOLS, GENERAL NOTES, AND SPECIFICATIONS |
| E1.0 | PENTHOUSE ELECTRICAL PLAN - DEMOLITION AND NEW WORK |
| E2.0 | ROOF ELECTRICAL PLAN - DEMOLITION AND NEW WORK |
| E3.0 | PARTIAL ELECTRICAL RISER DIAGRAMS - DEMOLITION AND NEW WORK |


## SEALS


Grumman/Butkus Associates
Energy Efficiency Consultants and Sustainable Design Engineers
820 Davis St, Ste 300
Evanston, Illinois 60201 4446
847 328.3555 www.grummanbutkus.com


Copyright © 2013 Grumman/Butkus Associates Illinois Registration: #184-000926


| ISSUES & REVISIONS | | |
|---|---|---|
| NO. | DESCRIPTION | DATE |
| | 100% OWNER REVIEW | 11/15/13 |
| | ISSUED FOR BID | 11/22/13 |
| | ISSUED FOR PERMIT | |

COVER SHEET

AIR-COOLED CHILLER REPLACEMENT
McHENRY COUNTY GOVERNMENT CENTER
2200 NORTH SEMINARY AVENUE
WOODSTOCK, IL 60098

| | |
|---|---|
| DATE | 2013/10/07 |
| SCALE | NO SCALE |
| DRAWN | MSB |
| CHECKED | JDV |
| APPROVED | JDV |
| JOB NO. | P13-0334-00 |

CS

## GENERAL

| DESIGNATION | DESCRIPTION |
|---|---|
| 1 | DETAIL OR ENLARGED PLAN (SAME DRAWING) |
| 1 / M2.6 | DETAIL OR ENLARGED PLAN (DIFFERENT DRAWING) |
| A | SECTION OR ELEVATION (SAME DRAWING) |
| A / M3.4 | SECTION OR ELEVATION (DIFFERENT DRAWING) |
| | (HEAVY LINES) – NEW PIPING/DUCTWORK/EQUIPMENT |
| | (THIN LINES) – EXISTING PIPING/DUCTWORK/ EQUIPMENT TO REMAIN |
| | (THIN HATCHED LINES) – EXISTING PIPING/DUCTWORK/ EQUIPMENT TO BE DEMOLISHED |
| | POINT OF CONNECTION BETWEEN NEW/DEMO WORK AND EXISTING |
| | MATCH LINE |

## RISER TAGS

| DESIGNATION | DESCRIPTION |
|---|---|
| DESCRIPTION / CHW 1 / RISER NUMBER | |
| CD | CONDENSATE DRAIN |
| CHW | CHILLED WATER |
| CR | CONDENSATE (STEAM) |
| CW | CONDENSER WATER |
| FO | FUEL OIL |
| GLY | GLYCOL |
| HW | HOT WATER |
| MGV | MEDICAL GAS/VACUUM |
| PCHW | PRIMARY CHILLED WATER |
| R | REFRIGERANT |
| SCHW | SECONDARY CHILLED WATER |
| STM | STEAM |

## EQUIPMENT TAGS

| DESIGNATION | DESCRIPTION (B – DESIGNATION, 1 – NUMBER) |
|---|---|
| | |
| ACC | AIR-COOLED CHILLER |
| ACCU | AIR-COOLED CONDENSING UNIT |
| ACU | AIR CONDITIONING UNIT (AIR-COOLED OR WATER-COOLED) |
| AHU | AIR HANDLING UNIT |
| AP | MEDICAL GAS/VACUUM AREA ALARM PANEL |
| B | BOILER |
| P | PUMP |

## PIPING LEGEND

| DESIGNATION | DESCRIPTION |
|---|---|
| BBD | BOILER BLOW DOWN |
| BF | BOILER FEED |
| CHWR | CHILLED WATER RETURN |
| CHWS | CHILLED WATER SUPPLY |
| CD | CONDENSATE DRAIN |
| DCW | DOMESTIC COLD WATER |
| D | DRAIN |
| HPC | HIGH PRESSURE CONDENSATE |
| HPS | HIGH PRESSURE STEAM |
| HTWR | HIGH TEMPERATURE HOT WATER RETURN |
| HTWS | HIGH TEMPERATURE HOT WATER SUPPLY |
| LPC | LOW PRESSURE CONDENSATE |
| LPS | LOW PRESSURE STEAM |
| LPS(C) | LOW PRESSURE CLEAN HUMIDIFICATION STEAM |
| HWR | LOW TEMPERATURE HOT WATER RETURN |
| HWS | LOW TEMPERATURE HOT WATER SUPPLY |
| MU | MAKE-UP WATER |
| PCHWR | PRIMARY CHILLED WATER RETURN |
| PCHWS | PRIMARY CHILLED WATER SUPPLY |

## PIPEWORK SYMBOLS

| DESIGNATION | DESCRIPTION |
|---|---|
| | PUMP |
| | BALL VALVE |
| | BUTTERFLY VALVE |
| | DOUBLE SPHERE FLEXIBLE CONNECTOR |
| | BALANCING VALVE |
| M | 2-WAY CONTROL VALVE (ELECTRIC OR ELECTRONIC ACTUATION) |
| M | 2-WAY BUTTERFLY CONTROL VALVE (ELECTRIC OR ELECTRONIC ACTUATION) |
| | PRESSURE REDUCING VALVE |
| | PRESSURE RELIEF OR SAFETY VALVE |
| | SWING GATE CHECK VALVE |
| | SPRING CHECK VALVE |
| | TRIPLE DUTY VALVE |
| | HOSE END DRAIN VALVE |
| | Y-TYPE STRAINER (WITH BLOWOFF VALVE) |
| | ELECTRIC HEAT TRACE |
| | FLEXIBLE CONNECTOR |
| HE | DRAIN WITH BALL VALVE, HOSE END CONNECTION |
| AV | AIR VENT (AUTOMATIC) |
| MV | AIR VENT (MANUAL) |
| | FLOW METER, ORIFICE |
| | MANUAL BALANCING VALVE WITH BALL SHUT OFF VALVE |
| | MANUAL BALANCING VALVE WITH BUTTERFLY SHUT OFF VALVE |
| | THERMOMETER |
| | HYDRONIC PRESSURE GAUGE & NEEDLE VALVE |
| PT | UNIVERSAL PORT FOR PRESSURE GAUGE OR THERMOMETER WELL |

## AUTOMATIC TEMPERATURE CONTROL SYMBOLS

| DESIGNATION | DESCRIPTION |
|---|---|
| T | ROOM TEMPERATURE SENSOR |
| T | PIPE INSERTION TEMPERATURE SENSOR |
| DPS | DIFFERENTIAL PRESSURE SWITCH |
| | MOTOR STARTER |
| VFD | VARIABLE FREQUENCY DRIVE |
| M | ELECTRIC MOTOR VALVE ACTUATOR |
| DP | DIFFERENTIAL PRESSURE SENSOR |
| FS | FLOW SWITCH |
| PS | PRESSURE SWITCH |
| TT | TEMPERATURE TRANSMITTER |
| TT/H | TEMPERATURE/HUMIDITY TRANSMITTER |

## PIPEWORK FITTINGS

NOTE:
ALL FITTINGS SHOWN BELOW ARE FOR USE IN SCREWED PIPING SYSTEMS UNLESS NOTED OTHERWISE. REFER TO SPECIFICATION FOR SPECIFIC PIPING SYSTEM REQUIREMENTS (SCREWED VS. FLANGED VS. WELDED VS. SOLDERED).

| DESIGNATION | DESCRIPTION |
|---|---|
| | CAP |
| | CONNECTION, BOTTOM |
| | CONNECTION, TOP |
| | ELBOW, 90° |
| | ELBOW TURNED UP |
| | ELBOW TURNED DOWN |
| 2 / 4 | ELBOW, REDUCING (SHOW SIZES) |
| | ELBOW, LONG RADIUS |
| | ELBOW, SIDE OUTLET, OUTLET UP |
| | ELBOW, SIDE OUTLET, OUTLET DOWN |
| | LATERAL BRANCH |
| | REDUCER, CONCENTRIC |
| | INCREASER, CONCENTRIC |
| | REDUCER, ECCENTRIC STRAIGHT INVERT |
| | REDUCER, ECCENTRIC STRAIGHT CROWN |
| | TEE |
| | TEE, OUTLET UP |
| | TEE, OUTLET DOWN |
| 6 / 4 / 2 | TEE, REDUCING (SHOW SIZES) |
| | TEE, SIDE OUTLET, OUTLET UP |
| | TEE, SIDE OUTLET, OUTLET DOWN |
| | UNION, SCREWED |
| R | PITCH OF PIPE – RISE (R), DROP (D) |

## ABBREVIATIONS

| DESIGNATION | DESCRIPTION |
|---|---|
| ABV | ABOVE |
| ADJ | ADJUSTABLE |
| AFF | ABOVE FINISHED FLOOR |
| AS | AIR SEPARATOR |
| BAS | BUILDING AUTOMATION SYSTEM |
| BHP | BRAKE HORSEPOWER |
| BTU | BRITISH THERMAL UNIT |
| CFM | CUBIC FEET PER MINUTE |
| CLG | CEILING |
| DB | DRY BULB |
| DDC | DIRECT DIGITAL CONTROL |
| DIA | DIAMETER |
| DPS | DIFFERENTIAL PRESSURE SWITCH |
| DWG | DRAWING |
| EL | ELEVATION |
| ELEC | ELECTRICAL |
| EQ | EQUIPMENT |
| ET | EXPANSION TANK |
| F OR °F | FAHRENHEIT |
| FD | FIRE DAMPER |
| FLA | FULL LOAD AMPS |
| FLR | FLOOR |
| FOB | FLAT ON BOTTOM |
| FOT | FLAT ON TOP |
| FPM | FEET PER MINUTE |
| FT | FEET OR FOOT |
| GA | GAUGE |
| GAL | GALLONS |
| GPM | GALLONS PER MINUTE |
| HP | HORSEPOWER |
| HTG | HEATING |
| HVAC | HEATING VENTILATING AND AIR CONDITIONING |
| ID | INSIDE DIAMETER |
| KW | KILOWATT |
| LRA | LOCK ROTOR AMPS |
| MAX | MAXIMUM |
| MCC | MOTOR CONTROL CENTER |
| MHP | MOTOR HORSEPOWER |
| MIN | MINIMUM |
| NC | NORMALLY CLOSED |
| NIC | NOT IN CONTRACT |
| NO | NORMALLY OPEN |
| NTS | NOT TO SCALE |
| OA | OUTDOOR AIR |
| PSI(G) | POUNDS PER SQUARE INCH (GAUGE) |
| RD | ROOF DRAIN |
| RPM | REVOLUTIONS PER MINUTE |
| TYP | TYPICAL |
| VFD | VARIABLE FREQUENCY DRIVE |
| V | VENT |
| W/ | WITH |
| W/O | WITHOUT |
| WG | WATER GAUGE |

## DUCTWORK SYMBOLS

| DESIGNATION | DESCRIPTION |
|---|---|
| AD 10x10 / AD 10x10 | ACCESS DOOR OR PANEL, VERTICAL OR HORIZONTAL |
| | ACOUSTICAL LINING; DIMENSIONS SHOWN ARE CLEAR AIR PATH |
| D / D | DUCT OFFSET (DOWN) IN DIRECTION OF FLOW |
| R / R | DUCT OFFSET (UP) IN DIRECTION OF FLOW |
| | RECTANGULAR SUPPLY DUCT ELBOW TURNED DOWN |
| | RECTANGULAR SUPPLY DUCT ELBOW TURNED UP |
| | RECTANGULAR EXHAUST/RETURN DUCT ELBOW TURNED DOWN |
| | RECTANGULAR EXHAUST/RETURN DUCT ELBOW TURNED UP |
| | ROUND DUCT ELBOW TURNED DOWN |
| | ROUND DUCT ELBOW TURNED UP |
| | DIRECTION OF FLOW |
| 20x12 / 20x12 | DUCT AIR PATH SIZE, FIRST FIGURE IS SIDE SHOWN |
| | FLEXIBLE CONNECTION |
| | FLEXIBLE DUCT |
| 36"x12" | DUCT SECTION, POSITIVE PRESSURE, FIRST FIGURE IS TOP |
| 36"x12" | DUCT SECTION, NEGATIVE PRESSURE, FIRST FIGURE IS TOP |
| 20x10 15x8 / 20x10 15x8 | TRANSITION WITH DUCT SIZE |
| | RECTANGULAR ELBOWS WITH TURNING VANES |
| | RECTANGULAR ELBOWS WITHOUT TURNING VANES |
| | DUCT PENETRATION THROUGH BEAM |
| | CAPPED DUCT – RECTANGULAR OR ROUND |
| | MOTOR OPERATED DAMPER |
| | CEILING-MOUNTED SUPPLY AIR TERMINAL DEVICE (4-WAY THROW) |
| | CEILING-MOUNTED SUPPLY AIR TERMINAL DEVICE (3-WAY THROW, SHADED AREA INDICATES BLANKED OFF SIDE) |
| | CEILING-MOUNTED SUPPLY AIR TERMINAL DEVICE (2-WAY THROW, SHADED AREAS INDICATE BLANKED OFF SIDES) |
| | CEILING-MOUNTED EXHAUST/RETURN AIR TERMINAL DEVICE |
| | WALL OR DUCT MOUNTED EXHAUST/RETURN AIR TERMINAL DEVICE |
| | WALL OR DUCT MOUNTED SUPPLY AIR TERMINAL DEVICE |
| 30"x12" | TRANSFER AIR DOOR GRILLE |
| 1/2" 100 CFM | UNDERCUT DOOR |
| 30"x12" | WALL MOUNTED TRANSFER AIR ASSEMBLY INCLUDING SHEETMETAL SLEEVE AND TWO (2) REGISTERS |
| | LINEAR SUPPLY AIR DIFFUSER |
| | LINEAR RETURN AIR DIFFUSER |
| | CENTRIFUGAL FAN |
| | PROPELLER FAN |
| | AXIAL FAN |
| VD | VOLUME DAMPER |
| SD | SMOKE DAMPER |
| FD | FIRE DAMPER |
| CSFD | COMBINATION SMOKE/FIRE DAMPER |
| H | HUMIDIFIER |


Grumman/Butkus Associates
Energy Efficiency Consultants and Sustainable Design Engineers
820 Davis St, Ste 300
Evanston, Illinois 60201 4446
847 328.3555 www.grummanbutkus.com


Copyright © 2013 Grumman/Butkus Associates Illinois Registration: #184-000926


| ISSUES & REVISIONS | | |
|---|---|---|
| NO. | DESCRIPTION | DATE |
| | 100% OWNER REVIEW | 11/15/13 |
| | ISSUED FOR BID | 11/22/13 |
| | ISSUED FOR PERMIT | |

MECHANICAL SYMBOLS AND ABBREVIATIONS

AIR-COOLED CHILLER REPLACEMENT
McHENRY COUNTY GOVERNMENT CENTER
2200 NORTH SEMINARY AVENUE
WOODSTOCK, IL 60098

| | |
|---|---|
| DATE | 2013/10/07 |
| SCALE | NO SCALE |
| DRAWN | MSB |
| CHECKED | JDV |
| APPROVED | JDV |
| JOB NO. | P13-034-00 |

M0.1

## GENERAL NOTES

A. ANY WORK ASSOCIATED WITH REMOVAL OF ANY HAZARDOUS MATERIAL IS BEYOND SCOPE OF THIS CONTRACT. CONTRACTOR SHALL SUSPEND WORK AND NOTIFY OWNER IF PRESENCE OF HAZARDOUS MATERIALS IN WORK AREA IS SUSPECTED.

B. ANY INTERRUPTION OF EXISTING SERVICES AND/OR EQUIPMENT SHALL BE PERFORMED AT A TIME APPROVED IN ADVANCE BY THE HOTEL'S DIRECTOR OF ENGINEERING SO AS NOT TO INTERFERE WITH THE PRESENT BUILDING OPERATION. HOTEL SHUTDOWN TIMES AND DURATIONS WILL BE BASED ON BUILDING OCCUPANCY AND EXPECTED WEATHER.

C. THESE DRAWINGS ARE DIAGRAMMATIC AND INDICATE THE GENERAL EXTENT OF THE WORK. THE EXACT EXTENT OF DEMOLITION SHALL BE AS REQUIRED BY THE NEW WORK.

D. CONTRACTOR SHALL COORDINATE THE INSTALLATION OF PIPING, DUCTWORK AND EQUIPMENT WITH THE WORK OF ALL OTHER TRADES.

E. CONTRACTOR SHALL BE RESPONSIBLE FOR RELOCATION OF ANY EXISTING INTERFERENCES AS REQUIRED, INCLUDING EXISTING EQUIPMENT, MATERIALS, PIPING, CONDUIT, HANGERS, DEVICES, ETC., AT NO ADDITIONAL COST.

F. THE CONTRACTOR SHALL INCLUDE ALL OTHER ITEMS OR WORK REQUIRED TO COMPLETE THE WORK INCLUDING EQUIPMENT MOVING AND RIGGING, CAULKING, SEALING, INSERTS, SUPPORTS, HANGERS, SLEEVES, AND WALL PLATES.

G. THE CONTRACTOR SHALL PROVIDE ALL MISCELLANEOUS SUPPORTING STEEL REQUIRED FOR THE PROPER INSTALLATION OF ALL MECHANICAL SYSTEMS.

H. FOR EQUIPMENT VALVING, COMPONENTS AND PIPING ARRANGEMENT, REFER TO PIPING DETAILS.

I. PIPE AND DUCT ROUTING SHALL BE REVISED TO AVOID INTERFERENCES DUE TO EXISTING CONDITIONS OR OTHER SERVICES RELOCATED. FAILURE TO RECOGNIZE WORK REQUIRED DUE TO EXISTING CONDITIONS SHALL BE AT THE EXPENSE OF THIS CONTRACTOR.

J. PIPING AND DUCTWORK SHALL NOT BE LOCATED OVER ELECTRICAL EQUIPMENT/PANELS. PROVIDE REQUIRED CLEARANCE IN FRONT OF ELECTRICAL EQUIPMENT. PIPING AND DUCTWORK SHALL NOT INTERFERE WITH ELECTRICAL EQUIPMENT CLEARANCE.

K. SHOP DRAWINGS AT 1/4"=1'-0" SCALE INDICATING PIPE AND EQUIPMENT LOCATIONS SHALL BE SUBMITTED BY INSTALLING CONTRACTORS FOR ENGINEER'S REVIEW PRIOR TO INSTALLATION. FAILURE TO DO SO MAY RESULT IN THE INSTALLING CONTRACTOR BEING REQUIRED TO RELOCATE SUCH ITEMS AT THE DIRECTION OF THE ENGINEER OR OWNER AT THE CONTRACTOR'S EXPENSE.

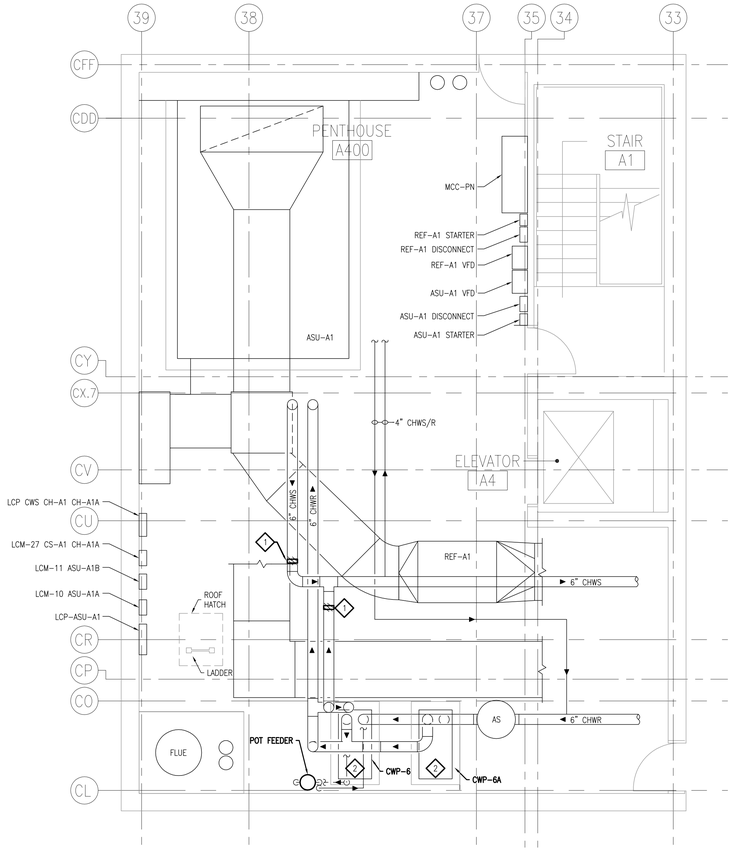


1 PENTHOUSE PLAN - DEMOLITION
Scale: 1/4" = 1'-0"

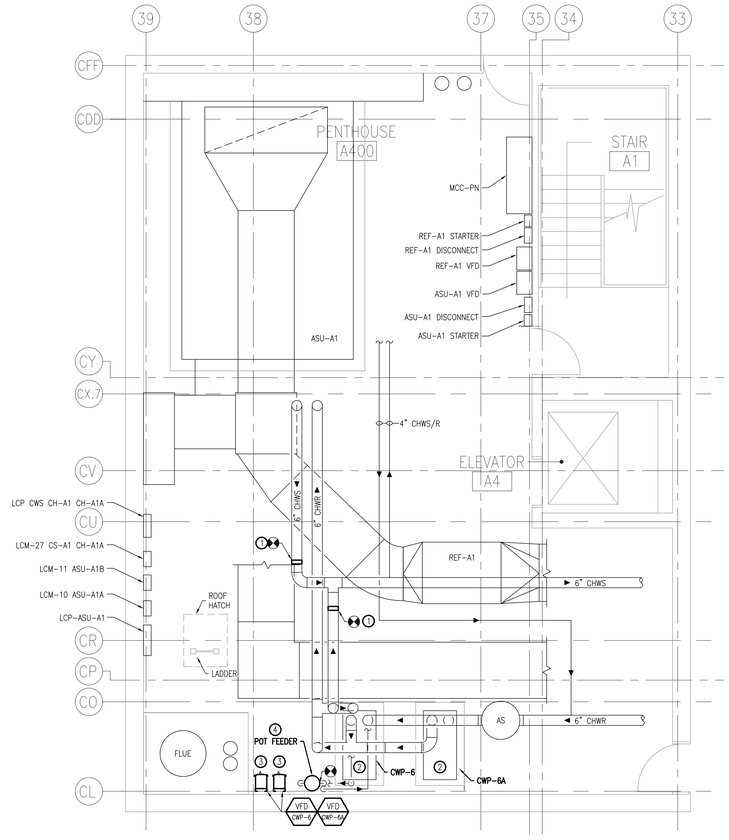


2 PENTHOUSE PLAN - NEW WORK
Scale: 1/4" = 1'-0"

## DEMOLITION PLAN NOTES

1. DEMOLISH EXISTING BALANCING DEVICE INCLUDING INSULATION. PREPARE PIPING FOR INSTALLATION OF NEW VALVE.
2. DEMOLISH EXISTING PUMP MOTOR. SEE ELECTRICAL DRAWINGS FOR ADDITIONAL INFORMATION.

## CONSTRUCTION PLAN NOTES

1. PROVIDE NEW MODULATING AUTOMATIC ISOLATION VALVE EQUAL TO BRAY 70 SERIES WTIH MANUAL OVERRIDE WHEEL AND END SWITCH INCLUDING ELECTRICAL.
2. PROVIDE NEW PREMIUM EFFICIENCY ODP PUMP MOTOR WITH SHAFT GROUNDING RING. SEE ELECTRICAL DRAWINGS FOR ADDITIONAL INFORMATION.
3. PROVIDE NEW VARIABLE FREQUENCY DRIVE INCLUDING ELECTRICAL AND CONTROLS. MOUNT ON UNISTRUT WHERE SHOWN ON PLANS.
4. PROVIDE NEW POT FEEDER INCLUDING INSULATION. CONNECT TO EXISTING PIPING.


Grumman/Butkus Associates
Energy Efficiency Consultants and Sustainable Design Engineers
820 Davis St, Ste 300
Evanston, Illinois 60201 4446
847 328.3555 www.grummanbutkus.com


Copyright © 2013 Grumman/Butkus Associates Illinois Registration #184-000926


| ISSUES & REVISIONS | | |
|---|---|---|
| NO. | DESCRIPTION | DATE |
| | 100% OWNER REVIEW | 11/15/13 |
| | ISSUED FOR BID | 11/22/13 |
| | ISSUED FOR PERMIT | |

PENTHOUSE MECHANICAL PLAN - DEMOLITION AND NEW WORK

AIR-COOLED CHILLER REPLACEMENT
McHENRY COUNTY GOVERNMENT CENTER
2200 NORTH SEMINARY AVENUE
WOODSTOCK, IL 60098

| | |
|---|---|
| DATE | 2013/10/07 |
| SCALE | |
| DRAWN | NAME |
| CHECKED | - |
| APPROVED | - |
| JOB NO. | P13-0334-00 |

M1.0

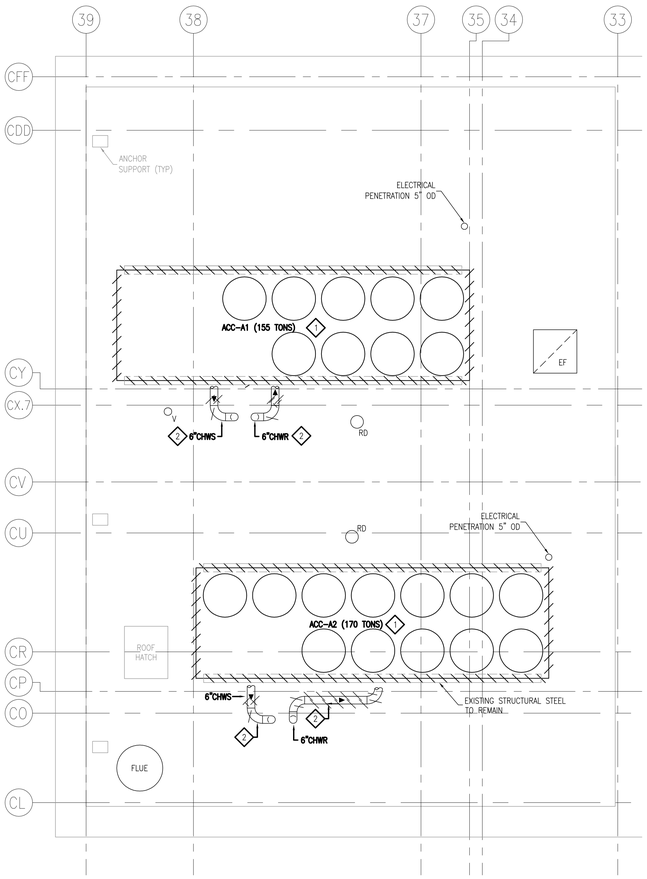


1 ROOF PLAN - DEMOLITION

Scale: 1/4" = 1'-0"

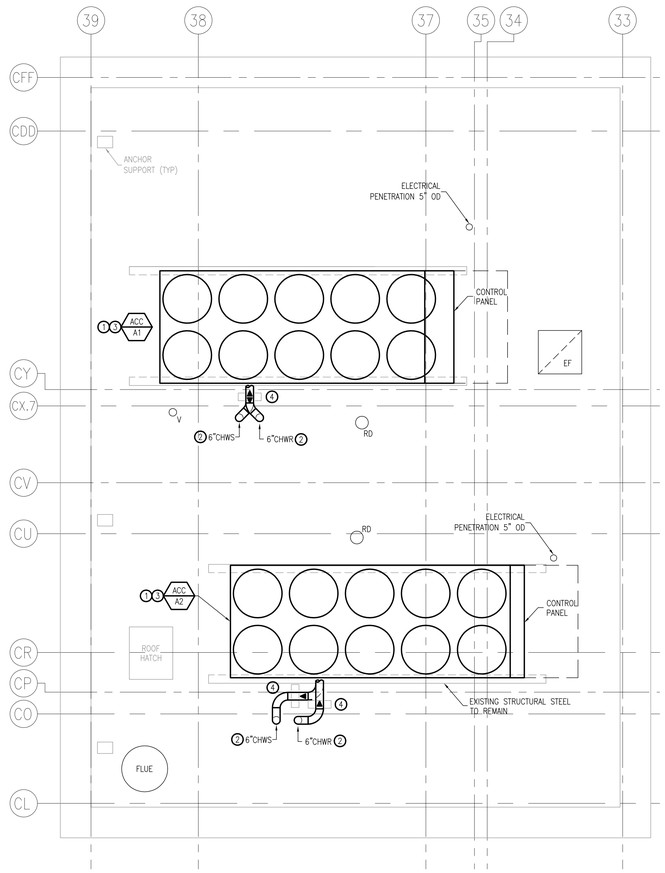


2 ROOF PLAN - NEW WORK

Scale: 1/4" = 1'-0"

## GENERAL NOTES

A. ANY WORK ASSOCIATED WITH REMOVAL OF ANY HAZARDOUS MATERIAL IS BEYOND SCOPE OF THIS CONTRACT. CONTRACTOR SHALL SUSPEND WORK AND NOTIFY OWNER IF PRESENCE OF HAZARDOUS MATERIALS IN WORK AREA IS SUSPECTED.

B. ANY INTERRUPTION OF EXISTING SERVICES AND/OR EQUIPMENT SHALL BE PERFORMED AT A TIME APPROVED IN ADVANCE BY THE HOTEL'S DIRECTOR OF ENGINEERING SO AS NOT TO INTERFERE WITH THE PRESENT BUILDING OPERATION. HOTEL SHUTDOWN TIMES AND DURATIONS WILL BE BASED ON BUILDING OCCUPANCY AND EXPECTED WEATHER.

C. THESE DRAWINGS ARE DIAGRAMMATIC AND INDICATE THE GENERAL EXTENT OF THE WORK. THE EXACT EXTENT OF DEMOLITION SHALL BE AS REQUIRED BY THE NEW WORK.

D. CONTRACTOR SHALL COORDINATE THE INSTALLATION OF PIPING, DUCTWORK AND EQUIPMENT WITH THE WORK OF ALL OTHER TRADES.

E. CONTRACTOR SHALL BE RESPONSIBLE FOR RELOCATION OF ANY EXISTING INTERFERENCES AS REQUIRED, INCLUDING EXISTING EQUIPMENT, MATERIALS, PIPING, CONDUIT, HANGERS, DEVICES, ETC., AT NO ADDITIONAL COST.

F. THE CONTRACTOR SHALL INCLUDE ALL OTHER ITEMS OR WORK REQUIRED TO COMPLETE THE WORK INCLUDING EQUIPMENT MOVING AND RIGGING, CAULKING SEALING, INSERTS, SUPPORTS, HANGERS, SLEEVES, AND WALL PLATES.

G. THE CONTRACTOR SHALL PROVIDE ALL MISCELLANEOUS SUPPORTING STEEL REQUIRED FOR THE PROPER INSTALLATION OF ALL MECHANICAL SYSTEMS.

H. FOR EQUIPMENT VALVING, COMPONENTS AND PIPING ARRANGEMENT, REFER TO PIPING DETAILS.

I. PIPE AND DUCT ROUTING SHALL BE REVISED TO AVOID INTERFERENCES DUE TO EXISTING CONDITIONS OR OTHER SERVICES RELOCATED. FAILURE TO RECOGNIZE WORK REQUIRED DUE TO EXISTING CONDITIONS SHALL BE AT THE EXPENSE OF THIS CONTRACTOR.

J. PIPING AND DUCTWORK SHALL NOT BE LOCATED OVER ELECTRICAL EQUIPMENT/PANELS. PROVIDE REQUIRED CLEARANCE IN FRONT OF ELECTRICAL EQUIPMENT. PIPING AND DUCTWORK SHALL NOT INTERFERE WITH ELECTRICAL EQUIPMENT CLEARANCE.

K. SHOP DRAWINGS AT 1/4"=1'-0" SCALE INDICATING PIPE AND EQUIPMENT LOCATIONS SHALL BE SUBMITTED BY INSTALLING CONTRACTORS FOR ENGINEER'S REVIEW PRIOR TO INSTALLATION. FAILURE TO DO SO MAY RESULT IN THE INSTALLING CONTRACTOR BEING REQUIRED TO RELOCATE SUCH ITEMS AT THE DIRECTION OF THE ENGINEER OR OWNER AT THE CONTRACTOR'S EXPENSE.

## 7 DEMOLITION PLAN NOTES

1. DEMOLISH EXISTING AIR-COOLED CHILLER INCLUDING ACCESSORIES, VIBRATION ISOLATORS, ELECTRICAL, AND CONTROLS. REUSE EXISTING PIPING HEAT TRACE. MODIFY EXISTING STRUCTURAL STEEL AS NECESSARY TO ACCEPT NEW AIR-COOLED CHILLER. SALVAGE EXISTING COMPRESSORS AND OTHER PARTS AS DIRECTED BY OWNER. RECLAIM 100 LBS OF REFRIGERANT AND STORE AS DIRECTED BY OWNER. REMOVAL AND DISPOSAL OF REFRIGERANT AND COMPRESSOR OIL ONLY BY UNITED STATES ENVIRONMENTAL PROTECTION AGENCY (EPA) CERTIFIED TECHNICIANS IN ACCORDANCE WITH CLEAN AIR ACT AND ALL APPLICABLE EPA REGULATIONS. SEE ELECTRICAL DRAWINGS FOR ADDITIONAL INFORMATION.

2. DEMOLISH EXISTING CHILLED WATER PIPING INCLUDING SERVICE JACKET AND INSULATION. NEATLY TERMINATE PIPING WHERE SHOWN FOR INSTALLATION OF NEW CHILLED WATER PIPING.

## 1 CONSTRUCTION PLAN NOTES

1. INSTALL NEW AIR-COOLED CHILLER PREPURCHASED BY OWNER AND ASSIGNED TO CONTRACTOR. INSTALL ALL ITEMS PROVIDED WITH CHILLER INCLUDING SPRING ISOLATORS PER MANUFACTURER'S INSTRUCTIONS. PROVIDE INSULATION AS REQUIRED FOR EQUIPMENT AND FACTORY INSTALLED PIPING. PROVIDE ELECTRICAL AND PIPE CONNECTIONS. MOUNT CHILLER ON VIBRATION ISOLATORS. SEE ELECTRICAL DRAWINGS FOR ADDITIONAL INFORMATION. REFER TO PROJECT MANUAL AND SCHEDULE FOR ADDITIONAL INFORMATION INCLUDING CONTRACTOR'S RESPONSIBILITY FOR PREPURCHASED AND ASSIGNED EQUIPMENT.

2. PROVIDE NEW CHILLED WATER PIPING INCLUDING SUPPORTS, INSULATION, SERVICE JACKET.

3. RECONFIGURE FACTORY MOUNTED CHILLER PIPING SO THAT CONNECTIONS ARE ON SAME SIDE AS NEW CHILLED WATER PIPING. SEE PROJECT MANUAL FOR CHILLER CUT SHEET.

4. PIPE SUPPORT. SEE SPECIFICATIONS FOR ADDITIONAL INFORMATION.

Grumman/Butkus Associates
Energy Efficiency Consultants and Sustainable Design Engineers
820 Davis St, Ste 300
Evanston, Illinois 60201 4446
847 328.3555 www.grummanbutkus.com
Copyright © 2013 Grumman/Butkus Associates Illinois Registration #184-000926

| ISSUES & REVISIONS | | |
|---|---|---|
| NO. | DESCRIPTION | DATE |
| | 100% OWNER REVIEW | 11/15/13 |
| | ISSUED FOR BID | 11/22/13 |
| | ISSUED FOR PERMIT | |

ROOF MECHANICAL PLAN - DEMOLITION AND NEW WORK

AIR-COOLED CHILLER REPLACEMENT
McHENRY COUNTY GOVERNMENT CENTER
2200 NORTH SEMINARY AVENUE
WOODSTOCK, IL 60098

| | |
|---|---|
| DATE | 2013/10/07 |
| SCALE | |
| DRAWN | NAME |
| CHECKED | - |
| APPROVED | - |
| JOB NO. | P13-0334-00 |

M2.0

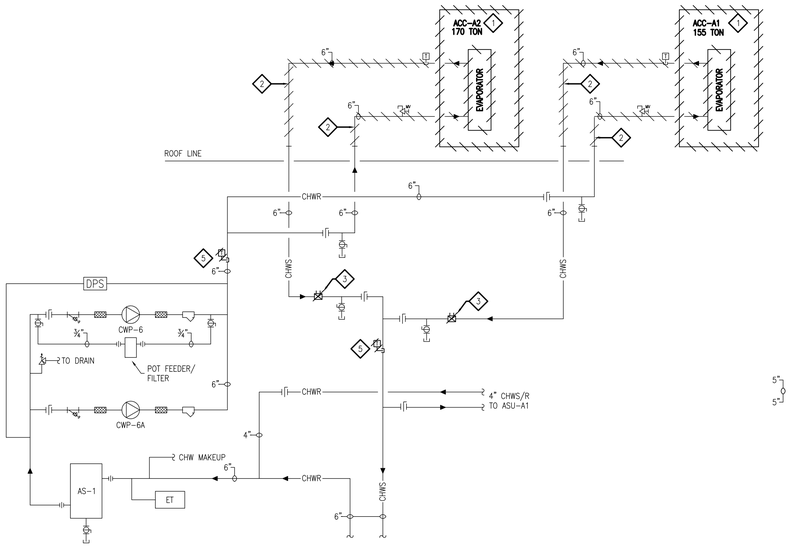


1 FLOW DIAGRAM - DEMOLITION

Scale: NO SCALE

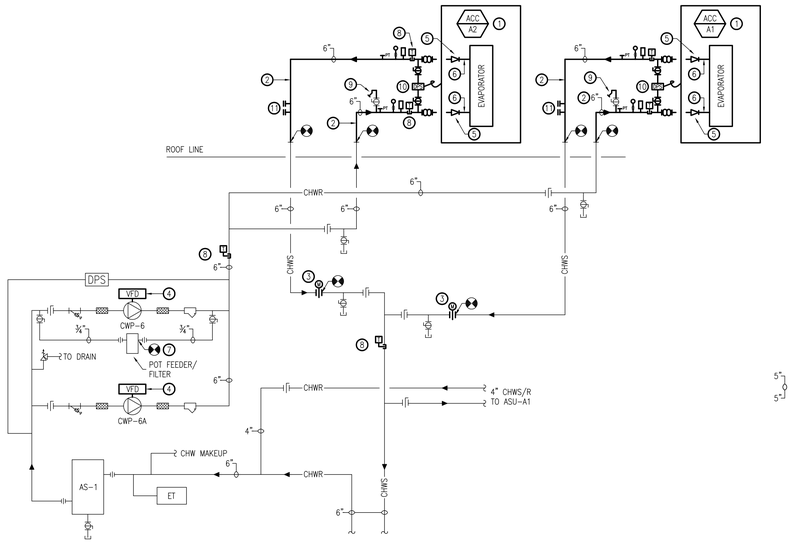


2 FLOW DIAGRAM - NEW WORK

Scale: NO SCALE

## GENERAL NOTES

A. ANY WORK ASSOCIATED WITH REMOVAL OF ANY HAZARDOUS MATERIAL IS BEYOND SCOPE OF THIS CONTRACT. CONTRACTOR SHALL SUSPEND WORK AND NOTIFY OWNER IF PRESENCE OF HAZARDOUS MATERALS IN WORK AREA IS SUSPECTED.

B. ANY INTERRUPTION OF EXISTING SERVICES AND/OR EQUIPMENT SHALL BE PERFORMED AT A TIME APPROVED IN ADVANCE BY THE HOTEL'S DIRECTOR OF ENGINEERING SO AS NOT TO INTERFERE WITH THE PRESENT BUILDING OPERATION. HOTEL SHUTDOWN TIMES AND DURATIONS WILL BE BASED ON BUILDING OCCUPANCY AND EXPECTED WEATHER.

C. THESE DRAWINGS ARE DIAGRAMMATIC AND INDICATE THE GENERAL EXTENT OF THE WORK. THE EXACT EXTENT OF DEMOLITION SHALL BE AS REQUIRED BY THE NEW WORK.

D. CONTRACTOR SHALL COORDINATE THE INSTALLATION OF PIPING, DUCTWORK AND EQUIPMENT WITH THE WORK OF ALL OTHER TRADES.

E. CONTRACTOR SHALL BE RESPONSIBLE FOR RELOCATION OF ANY EXISTING INTERFERENCES AS REQUIRED, INCLUDING EXISTING EQUIPMENT, MATERIALS, PIPING, CONDUIT, HANGERS, DEVICES, ETC., AT NO ADDITIONAL COST.

F. THE CONTRACTOR SHALL INCLUDE ALL OTHER ITEMS OR WORK REQUIRED TO COMPLETE THE WORK INCLUDING EQUIPMENT MOVING AND RIGGING, CAULKING, SEALING, INSERTS, SUPPORTS, HANGERS, SLEEVES, AND WALL PLATES.

G. THE CONTRACTOR SHALL PROVIDE ALL MISCELLANEOUS SUPPORTING STEEL REQUIRED FOR THE PROPER INSTALLATION OF ALL MECHANICAL SYSTEMS.

H. FOR EQUIPMENT VALVING, COMPONENTS AND PIPING ARRANGEMENT, REFER TO PIPING DETAILS.

I. PIPE AND DUCT ROUTING SHALL BE REVISED TO AVOID INTERFERENCES DUE TO EXISTING CONDITIONS OR OTHER SERVICES RELOCATED. FAILURE TO RECOGNIZE WORK REQUIRED DUE TO EXISTING CONDITIONS SHALL BE AT THE EXPENSE OF THIS CONTRACTOR.

J. PIPING AND DUCTWORK SHALL NOT BE LOCATED OVER ELECTRICAL EQUIPMENT/PANELS. PROVIDE REQUIRED CLEARANCE IN FRONT OF ELECTRICAL EQUIPMENT. PIPING AND DUCTWORK SHALL NOT INTERFERE WITH ELECTRICAL EQUIPMENT CLEARANCE.

K. SHOP DRAWINGS AT 1/4"=1'-0" SCALE INDICATING PIPE AND EQUIPMENT LOCATIONS SHALL BE SUBMITTED BY INSTALLING CONTRACTORS FOR ENGINEER'S REVIEW PRIOR TO INSTALLATION. FAILURE TO DO SO MAY RESULT IN THE INSTALLING CONTRACTOR BEING REQUIRED TO RELOCATE SUCH ITEMS AT THE DIRECTION OF THE ENGINEER OR OWNER AT THE CONTRACTOR'S EXPENSE.

## 1 DEMOLITION PLAN NOTES

1. DEMOLISH EXISTING AIR-COOLED CHILLER INCLUDING ACCESSORIES, VIBRATION ISOLATORS, ELECTRICAL, AND CONTROLS. REUSE EXISTING PIPING HEAT TRACE. MODIFY EXISTING STRUCTURAL STEEL AS NECESSARY TO ACCEPT NEW AIR-COOLED CHILLER. SALVAGE EXISTING PARTS AS DIRECTED BY OWNER. REMOVAL AND DISPOSAL OF REFRIGERANT AND COMPRESSOR OIL ONLY BY UNITED STATES ENVIRONMENTAL PROTECTION AGENCY (EPA) CERTIFIED TECHNICIANS IN ACCORDANCE WITH CLEAN AIR ACT AND ALL APPLICABLE EPA REGULATIONS. SEE ELECTRICAL DRAWINGS FOR ADDITIONAL INFORMATION.

2. DEMOLISH EXISTING CHILLED WATER PIPING INCLUDING SERVICE JACKET AND INSULATION. EXISTING HEAT TRACE SHALL REMAIN AND REINSTALLED WITH NEW PIPING. NEATLY TERMINATE PIPING WHERE SHOWN FOR INSTALLATION OF NEW CHILLED WATER PIPING.

3. DEMOLISH EXISTING BALANCING DEVICE INCLUDING INSULATION. PREPARE PIPING FOR INSTALLATION OF NEW VALVE.

4. DEMOLISH EXISTING POT FEEDER/FILTER. PREPARE PIPING FOR NEW POT FEEDER/FILTER

5. DEMOLISH EXISTING TEMPERATURE SENSORS INCLUDING WIRING.

## 2 CONSTRUCTION PLAN NOTES

1. INSTALL NEW AIR-COOLED CHILLER PREPURCHASED BY OWNER AND ASSIGNED TO CONTRACTOR. INSTALL ALL ITEMS PROVIDED WITH CHILLER INCLUDING SPRING ISOLATORS PER MANUFACTURER'S INSTRUCTIONS. PROVIDE INSULATION AS REQUIRED FOR EQUIPMENT. PROVIDE ELECTRICAL AND PIPE CONNECTIONS. REINSTALL EXISTING HEAT TRACING FOR PIPING. MOUNT CHILLER ON VIBRATION ISOLATORS. SEE ELECTRICAL DRAWINGS FOR ADDITIONAL INFORMATION. REFER TO PROJECT MANUAL AND SCHEDULE FOR ADDITIONAL INFORMATION INCLUDING CONTRACTOR'S RESPONSIBILITY FOR PREPURCHASED AND ASSIGNED EQUIPMENT.

2. PROVIDE NEW CHILLED WATER PIPING INCLUDING SUPPORTS, INSULATION, ALUMINUM SERVICE JACKET.

3. PROVIDE NEW MODULATING AUTOMATIC ISOLATION VALVE EQUAL TO BRAY 70 SERIES WITH MANUAL OVERRIDE WHEEL AND END SWITCH. PROVIDE NEW INSULATION FOR VALVE BODY.

4. PROVIDE NEW VARIABLE FREQUENCY DRIVE INCLUDING ELECTRICAL AND CONTROLS. MOUNT ON UNISTRUT WHERE SHOWN ON PLANS.

5. PROVIDE FLEXIBLE CONNECTOR EQUAL TO MASON INDUSTRIES SAFEFLEX SFDEJ WITH CONTROL RODS.

6. RECONFIGURE VICTAULIC CHILLER PIPING SO THAT CONNECTIONS ARE ON SAME SIDE AS CHILLED WATER PIPING. PROVIDE INSULATION AND ALUMINUM SERVICE JACKET PER SPECIFICATIONS.

7. INSULATE EXISTING POT FEEDER/FILTER WITH MINIMUM 1" CLOSED CELL INSULATION.

8. PROVIDE NEW TEMPERATURE SENSOR AND ASSOCIATED WIRING. SEE SPECIFICATIONS

9. 1¼" MANUAL VENT WITH HOSE BIB CONNECTION

10. DIFFERENTIAL PRESSURE FLOW SWITCH PROVIDED BY YORK FOR INSTALLATION BY CONTRACTOR. WIRE TO CHILLER CONTROL PANEL.

11. PROVIDE 6" EMERGENCY CHILLED WATER CONNECTIONS WITH BLIND FLANGE INCLUDING INSULATION AND ALUMINUM SERVICE JACKET.


Grumman/Butkus Associates
Energy Efficiency Consultants and Sustainable Design Engineers
820 Davis St, Ste 300
Evanston, Illinois 60201 4446
847 328.3555 www.grummanbutkus.com


Copyright © 2013 Grumman/Butkus Associates Illinois Registration #184-000926


| ISSUES & REVISIONS | | |
|---|---|---|
| NO. | DESCRIPTION | DATE |
| | 100% OWNER REVIEW | 11/15/13 |
| | ISSUED FOR BID | 11/22/13 |
| | ISSUED FOR PERMIT | |

MECHANICAL FLOW DIAGRAMS - DEMOLITION AND NEW WORK

AIR-COOLED CHILLER REPLACEMENT
McHENRY COUNTY GOVERNMENT CENTER
2200 NORTH SEMINARY AVENUE
WOODSTOCK, IL 60098

| | |
|---|---|
| DATE | 2013/10/07 |
| SCALE | |
| DRAWN | NAME |
| CHECKED | - |
| APPROVED | - |
| JOB NO. | P13-0334-00 |

M3.0

## CHILLERS, AIR-COOLED

| TAG | SERVICE | LOCATION | CAPACITY (TONS) | REFRIGERANT | | EVAPORATOR | | | | | | CONDENSER | | | | | COMPRESSOR AND ELECTRICAL DATA(1) | | | | | | | | | MINIMUM CHILLER EFFICIENCY(2) | | MAXIMUM DIMENSIONS W x L x H (IN x IN x IN) | SHIPPING WEIGHT (LBS) | OPERATING WEIGHT (LBS) | MANUFACTURER | MODEL NUMBER | REMARKS |
|---|---|---|---|---|---|---|---|---|---|---|---|---|---|---|---|---|---|---|---|---|---|---|---|---|---|---|---|---|---|---|---|---|---|
| | | | | TYPE | CHARGE (LBS) | FLUID TYPE | FLOW RATE (GPM) | ENT FLUID TEMP (°F) | LVG FLUID TEMP (°F) | MAXIMUM PRESSURE DROP (FT WG) | FOULING FACTOR | MAXIMUM AMBIENT AIR TEMP (°F) | MINIMUM AMBIENT AIR TEMP (°F) | NUMBER OF FANS | FAN SPEED (RPM) | FAN POWER (HP) | COMPRESSORS | | INPUT POWER (kW) | FULL LOAD CURRENT (AMPS) | LOCKED ROTOR CURRENT (AMPS) | MINIMUM CIRCUIT CURRENT (AMPS) | MAXIMUM OVERCURRENT PROTECTION (AMPS) | V/Ø/Hz | CHILLER MOUNTED VFD (YES OR NO) | EMERGENCY POWER SOURCE REQUIRED (YES OR NO) | EER | NPLV EER | | | | | | |
| | | | | | | | | | | | | | | | | | NUMBER | TYPE | | | | | | | | | | | | | | | |
| ACC–A1 | A–MOD BLDG | ROOF | 159 | R–410A | 186 | WATER | 374 | 54 | 44 | 13 | 0.0001 | 105 | 0 | 10 | 1160 | 2 | 6 | SCROLL | 234 | – | – | 376 | 400 | 460/3/60 | NO | NO | 9.8 | 15.6 | 88 x 230 x 94 | 8,720 | 8,840 | YORK | YLAA0175HE46 | SEE EXHIBIT FOR OPTIONS |
| ACC–A2 | A–MOD BLDG | ROOF | 159 | R–410A | 186 | WATER | 374 | 54 | 44 | 13 | 0.0001 | 105 | 0 | 10 | 1160 | 2 | 6 | SCROLL | 234 | – | – | 376 | 400 | 460/3/60 | NO | NO | 9.8 | 15.6 | 88 x 230 x 94 | 8720 | 8840 | YORK | YLAA0175HE46 | SEE EXHIBIT FOR OPTIONS |

NOTES:
(1) DESIGN ELECTRICAL DATA FOR BASIS OF DESIGN CHILLER. ELECTRICAL REQUIREMENTS SHALL BE ADJUSTED BY CONTRACTOR FOR ACTUAL INSTALLED CHILLER
(2) FULL AND PART LOAD EFFICIENCIES MUST MEET ASHRAE STANDARD 90.1.

## VFD VARIABLE FREQUENCY DRIVES

| TAG | EQUIPMENT SERVED | LOCATION | MOTOR | | VFD RATING | | | WITH BYPASS (YES OR NO) | MANUFACTURER | MODEL NUMBER | REMARKS |
|---|---|---|---|---|---|---|---|---|---|---|---|
| | | | RATED POWER (HP) | V/Ø/Hz | RATED POWER (HP) | AMPS | V/Ø/Hz | | | | |
| VFD–CWP6 | CWP–6 | PENTHOUSE MECH ROOM | 30 | 460/3/60 | 30 | 40 | 460/3/60 | YES | SCHNEIDER ELECT | S–FLEX SFD212MG4Y | SEE SPECIFICATIONS |
| VFD–CWP6A | CWP–6A | PENTHOUSE MECH ROOM | 30 | 460/3/60 | 30 | 40 | 460/3/60 | YES | SCHNEIDER ELECT | S–FLEX SFD212MG4Y | SEE SPECIFICATIONS |

NOTES:

## CONTROL SEQUENCE

### TEMPERATURE CONTROL NOTES

1. ALL CONTROL WIRING SHALL BE IN CONDUIT, CONFORMING TO NATIONAL ELECTRICAL CODE AND ELECTRICAL SPECIFICATIONS. OUTDOOR WIRING SHALL BE IN WEATHER–PROOF RACEWAY WITH LIQUID TIGHT CONNECTIONS.
2. CONTROLS SHALL BE FROM THE EXISTING ALPHA CONTROLS CONTROL SYSTEM. MODIFY EXISTING CONTROLS AS REQUIRED. EXISTING DEVICES MAY BE REUSED IF FULLY RE–COMMISSIONED.
3. PROVIDE DEMOLITION OF ALL CONTROL DEVICES AND WIRING MADE OBSOLETE BY NEW WORK.
4. ALL SETPOINTS SHALL BE ADJUSTABLE. ADJUSTABLE SETPOINTS SHALL BE AVAILABLE ON SCREEN UNLESS NOTED AS NOT ADJUSTABLE.
5. NEW TEMPERATURE SENSORS SHALL BE 1000–OHM PLATINUM RTD'S.
6. PROVIDE NEW/UPDATED SYSTEM GRAPHIC AT OPERATOR WORKSTATION TO REFLECT THE WORK OF THIS PROJECT.
7. BACNET INTERFACE CARDS SHALL BE PROVIDED WITH VFDS AND INTERFACE WITH BAS. COORDINATE WITH MECHANICAL. UTILIZE SHIELD CABLE AS DIRECTED BY MANUFACTURER
8. ANNUNCIATE ALL ALARMS AT THE BUILDING AUTOMATION SYSTEM FRONT END.
9. PROVIDE 110 VAC TO ELECTRIC ACTUATED BUTTERFLY VALVES. COORDINATE WITH ELECTRICAL.
10. INTERFACE YORK BACNET CARDS WITH BAS FOR EACH CHILLER. UTILIZE SHIELDED CABLE AS DIRECTED BY MANUFACTURER.
11. PROVIDE SHIELDED WIRING FOR DIFFERENTIAL PRESSURE FLOW SWITCHES FOR EACH CHILLER.
12. ON FAILURE OF ANY LEAD–LAG DEVICE, ALARM AND NEXT SYSTEM IN SEQUENCE SHALL BE STARTED.
13. COORDINATE WITH ELECTRICAL REGARDING PROVISION OF POWER AND VOLTAGES TO CONTROL DEVICES AND PANELS.

### CHILLER CONTROL SEQUENCE

A. CHILLER PLANT SHALL BE ENABLED BASED ON ONE OF THE FOLLOWING:
   1. ENABLED BY OPERATOR.
   2. ENABLED BASED ON OUTSIDE AIR TEMPERATURE OF 55F (ADJ.)
   3. OTHER EXISTING MODE.

B. ON CALL FOR COOLING:
   1. CHILLER ISOLATION VALVE SHALL OPEN AND PROVE OPEN VIA END SWITCH FOR CHILLER WITH LEAST AMOUNT OF RUN HOURS.
   2. CHILLED WATER PUMP WITH LEAST AMOUNT OF RUN HOURS SHALL START. ROTATE PUMPS WEEKLY.
   3. CHILLED WATER VFD SHALL MODULATE TO SPEED EQUAL TO 374 GPM AS DETERMINED BY TEST AND BALANCE CONTRACTOR IN COORDINATION WITH CONTROLS CONTRACTOR.
   4. CHILLER SHALL START AFTER FLOW IS PROVEN THROUGH MANUFACTURER SUPPLIED AND CONTRACTOR INSTALLED DIFFERENTIAL PRESSURE FLOW SWITCH.
   5. INTERNAL CHILLER CONTROLS SHALL STAGE COMPRESSORS AS NEEDED TO MAINTAIN CHILLED WATER TEMPERATURE SETPOINT.

C. LAG CHILLER STAGE ON
   1. SECOND CHILLER SHALL STAGE ON BASED ON ONE OF THE FOLLOWING:
      a. ENABLED BY OPERATOR.
      b. MAIN CHILLED WATER SUPPLY TEMPERATURE IS 2F (ADJ.) ABOVE SETPOINT FOR MORE THAN 15 MIN (ADJ.)
      c. LEAD CHILLER AMPERAGE IS 90% OF FULL LOAD FOR MORE THAN 15 MIN (ADJ).
      d. OTHER EXISTING MODE.
   2. CHILLER ISOLATION VALVE SHALL OPEN AND PROVE OPEN VIA END SWITCH.
   3. CHILLED WATER PUMP SHALL SLOWLY INCREASE SPEED TO EQUAL 748 GPM AS DETERMINED BY TEST AND BALANCE CONTRACTOR IN COORDINATION WITH CONTROLS CONTRACTOR.
   4. CHILLER SHALL START AFTER FLOW IS PROVEN THROUGH MANUFACTURER SUPPLIED AND CONTRACTOR INSTALLED DIFFERENTIAL PRESSURE FLOW SWITCH.
   5. INTERNAL CHILLER CONTROLS SHALL STAGE COMPRESSORS AS NEEDED TO MAINTAIN CHILLED WATER TEMPERATURE SETPOINT.

D. LAG CHILLER OFF
   1. LAG CHILLER SHALL STAGE OFF BASED ON ONE OF THE FOLLOWING:
      a. DISABLED BY OPERATOR.
      b. COMBINED CHILLER AMPS IS 80% OF ONE CHILLER FOR MORE THAN 15 MIN (ADJ.)
      c. OTHER EXISTING MODE.
   2. CHILLER SHALL BE DISABLED.
   3. PUMP SHALL REDUCE SPEED FOR OPERATION WITH A SINGLE CHILLER.
   4. ISOLATION VALVE SHALL CLOSE.

E. CHILLER PLANT SHALL BE DISABLED BASED ON ONE OF THE FOLLOWING:
   1. DISABLED BY OPERATOR.
   2. IF OUTSIDE AIR TEMPERATURE DROPS BELOW 50F (ADJ.) FOR MORE THAN 30 MIN (ADJ.)
   3. OTHER EXISTING MODE.

F. CHILLED WATER TEMPERATURE RESET
   1. EVERY 15 MIN (ADJ), RESET THE CHILLED WATER TEMPERATURE SETPOINT BASED ON CHILLED WATER TEMPERATURE RESET SCHEDULE.

## CONTROL DIAGRAM

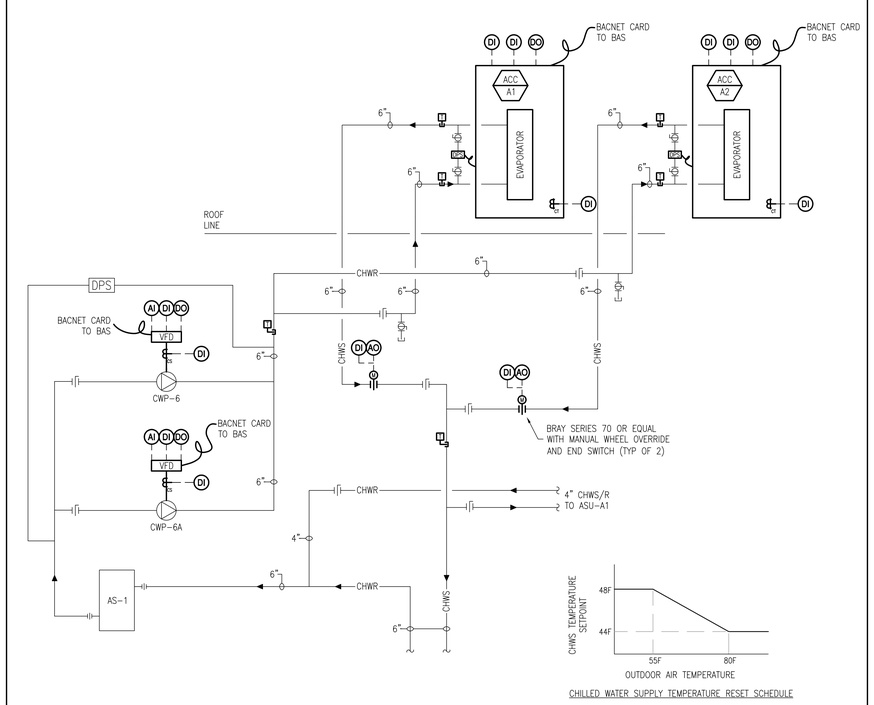


CHILLED WATER SUPPLY TEMPERATURE RESET SCHEDULE

## POINTS LIST

| DESCRIPTION | POINT TYPE DI DIGITAL INPUT | DO DIGITAL OUTPUT | AI ANALOG INPUT | AO ANALOG OUTPUT | REMARKS |
|---|---|---|---|---|---|
| ACC–A1 GENERAL ALARM SYSTEM 1 | X | | | | HARDWIRED TO CONTROLLER |
| ACC–A1 GENERAL ALARM SYSTEM 2 | X | | | | HARDWIRED TO CONTROLLER |
| ACC–A1 REMOTE START/STOP | | X | | | HARDWIRED TO CONTROLLER |
| ACC–A2 GENERAL ALARM SYSTEM 1 | X | | | | HARDWIRED TO CONTROLLER |
| ACC–A2 GENERAL ALARM SYSTEM 2 | X | | | | HARDWIRED TO CONTROLLER |
| ACC–A1 REMOTE START/STOP | | X | | | HARDWIRED TO CONTROLLER |
| ACC–A1 AUTOMATIC ISOLATION VALVE COMMAND | | | | X | |
| ACC–A2 AUTOMATIC ISOLATION VALVE COMMAND | | | | X | |
| ACC–A1 AUTOMATIC ISOLATION VALVE END SWITCH | X | | | | |
| ACC–A2 AUTOMATIC ISOLATION VALVE END SWITCH | X | | | | |
| ACC–A1 CHILLER AMPS | | | X | | VIA CURRENT TRANSDUCER |
| ACC–A2 CHILLER AMPS | | | X | | VIA CURRENT TRANSDUCER |
| ACC–A1 CHWS TEMPERATURE | | | X | | |
| ACC–A1 CHWR TEMPERATURE | | | X | | |
| ACC–A2 CHWS TEMPERATURE | | | X | | |
| ACC–A2 CHWR TEMPERATURE | | | X | | |
| MAIN CHWS TEMPERATURE | | | X | | |
| MAIN CHWR TEMPERATURE | | | X | | |
| ACC–A1 CHWS TEMPERATURE (BACNET OBJ AI_1) | | | X | | VIA BACNET CARD INTEGRATION |
| ACC–A1 CHWR TEMPERATURE (BACNET OBJ AI_2) | | | X | | VIA BACNET CARD INTEGRATION |
| ACC–A2 CHWS TEMPERATURE (BACNET OBJ AI_1) | | | X | | VIA BACNET CARD INTEGRATION |
| ACC–A2 CHWR TEMPERATURE (BACNET OBJ AI_2) | | | X | | VIA BACNET CARD INTEGRATION |
| ACC–A1 CHILLED WATER REMOTE SETPOINT (BACNET OBJ AV_1) | | | | X | VIA BACNET CARD INTEGRATION, WRITE OBJECT |
| ACC–A1 CHILLED WATER SETPOINT (BACNET OBJ AI_40) | | | X | | VIA BACNET CARD INTEGRATION, READ OBJECT |
| ACC–A1 SYSTEM 1 OPERATIONAL CODE (BACNET OBJ AI_25) | | | X | | VIA BACNET CARD INTEGRATION, PROVIDE REFERENCE ON GRAPHICS |
| ACC–A1 SYSTEM 1 FAULT CODE (BACNET OBJ AI_26) | | | X | | VIA BACNET CARD INTEGRATION, PROVIDE REFERENCE ON GRAPHICS |
| ACC–A1 SYSTEM 2 OPERATIONAL CODE (BACNET OBJ AI_27) | | | X | | VIA BACNET CARD INTEGRATION, PROVIDE REFERENCE ON GRAPHICS |
| ACC–A1 SYSTEM 2 FAULT CODE (BACNET OBJ AI_28) | | | X | | VIA BACNET CARD INTEGRATION, PROVIDE REFERENCE ON GRAPHICS |
| ACC–A1 UNIT CONTROL MODE (BACNET OBJ AI_33) | X | | | | VIA BACNET CARD INTEGRATION, PROVIDE REFERENCE ON GRAPHICS |
| ACC–A1 SYSTEM 1 ALARM (BACNET OBJ BI_1) | X | | | | VIA BACNET CARD INTEGRATION |
| ACC–A1 SYSTEM 2 ALARM (BACNET OBJ BI_2) | X | | | | VIA BACNET CARD INTEGRATION |
| ACC–A1 EVAPORATOR HEATER STATUS (BACNET OBJ BI_3) | X | | | | VIA BACNET CARD INTEGRATION |
| ACC–A2 CHILLED WATER REMOTE SETPOINT (BACNET OBJ AV_1) | | | | X | VIA BACNET CARD INTEGRATION |
| ACC–A2 CHILLED WATER SETPOINT (BACNET OBJ AI_40) | | | X | | VIA BACNET CARD INTEGRATION |
| ACC–A2 SYSTEM 1 OPERATIONAL CODE (BACNET OBJ AI_25) | | | X | | VIA BACNET CARD INTEGRATION, PROVIDE REFERENCE ON GRAPHICS |
| ACC–A2 SYSTEM 1 FAULT CODE (BACNET OBJ AI_26) | | | X | | VIA BACNET CARD INTEGRATION, PROVIDE REFERENCE ON GRAPHICS |
| ACC–A2 SYSTEM 2 OPERATIONAL CODE (BACNET OBJ AI_27) | | | X | | VIA BACNET CARD INTEGRATION, PROVIDE REFERENCE ON GRAPHICS |
| ACC–A2 SYSTEM 2 FAULT CODE (BACNET OBJ AI_28) | | | X | | VIA BACNET CARD INTEGRATION, PROVIDE REFERENCE ON GRAPHICS |
| ACC–A2 UNIT CONTROL MODE (BACNET OBJ AI_33) | X | | | | VIA BACNET CARD INTEGRATION, PROVIDE REFERENCE ON GRAPHICS |
| ACC–A2 SYSTEM 1 ALARM (BACNET OBJ BI_1) | X | | | | VIA BACNET CARD INTEGRATION |
| ACC–A2 SYSTEM 2 ALARM (BACNET OBJ BI_2) | X | | | | VIA BACNET CARD INTEGRATION |
| ACC–A2 EVAPORATOR HEATER STATUS (BACNET OBJ BI_3) | X | | | | VIA BACNET CARD INTEGRATION |
| CWP–6 VFD START/STOP | | X | | | HARDWIRED TO CONTROLLER |
| CWP–6 GENERAL ALARM | X | | | | HARDWIRED TO CONTROLLER |
| CWP–6 STATUS | X | | | | HARDWIRED TO CONTROLLER, CURRENT SWITCH |
| CWP–6 KW | | | X | | VIA BACNET CARD INTEGRATION |
| CWP–6 SPEED | | | X | | VIA BACNET CARD INTEGRATION |
| CWP–6A VFD START/STOP | | X | | | HARDWIRED TO CONTROLLER |
| CWP–6A STATUS | X | | | | HARDWIRED TO CONTROLLER |
| CWP–6A GENERAL ALARM | X | | | | HARDWIRED TO CONTROLLER |
| CWP–6A KW | | | X | | VIA BACNET CARD INTEGRATION |
| CWP–6A SPEED | | | X | | VIA BACNET CARD INTEGRATION |

NOTES:
(1) ALL EXISTING POINTS SHALL NOT LISTED SHALL BE REPLACED OR RECOMMISSIONED


Grumman/Butkus Associates
Energy Efficiency Consultants and Sustainable Design Engineers
820 Davis St, Ste 300
Evanston, Illinois 60201 4446
847 328.3555 www.grummanbutkus.com


Copyright © 2013 Grumman/Butkus Associates Illinois Registration #184-000926


| NO. | DESCRIPTION | DATE |
|---|---|---|
| | 100% OWNER REVIEW | 11/15/13 |
| | ISSUED FOR BID | 11/22/13 |
| | ISSUED FOR PERMIT | |

MECHANICAL SCHEDULES AND TEMPERATURE CONTROLS

AIR-COOLED CHILLER REPLACEMENT
McHENRY COUNTY GOVERNMENT CENTER
2200 NORTH SEMINARY AVENUE
WOODSTOCK, IL 60098

DATE 2013/10/07
SCALE NO SCALE
DRAWN MSB
CHECKED JDV
APPROVED JDV
JOB NO. 213–034–00

M4.0

## ELECTRICAL SHEET SPECIFICATION
## BASIC ELECTRICAL MATERIALS AND METHODS

1.0 GENERAL

1.1 SCOPE: THE WORK SPECIFIED IN THESE NOTES INCLUDES, BUT SHALL NOT BE LIMITED TO, PROVIDING LABOR, MATERIAL, EQUIPMENT, AND SERVICES NECESSARY FOR ELECTRICAL WORK AS SHOWN ON THE DRAWINGS AND AS HEREIN SPECIFIED.

1.2 REFER TO MECHANICAL DRAWINGS FOR ADDITIONAL INFORMATION AND COORDINATION.

1.3 THE CONTRACTOR SHALL BE RESPONSIBLE FOR SHOP DRAWING SUBMITTALS WHICH SHALL INCLUDE, BUT NOT BE LIMITED TO A MINIMUM OF FIVE (5) COPIES OF: PRODUCT DATA AND EQUIPMENT SPECIFICATIONS SHEETS, SCHEMATIC DIAGRAMS, WIRING DIAGRAMS, SIZES, MOUNTING DETAILS (WITH REQUIRED ELEVATIONS), TECHNICAL DESCRIPTIONS OF COMPONENTS, TEST REPORTS, CERTIFICATES, OPERATING AND MAINTENANCE MANUALS, AND PROPER CALCULATIONS TO ENSURE SPECIFIED PERFORMANCE OF THE SYSTEMS. NO EQUIPMENT SHALL BE ORDERED, PURCHASED, OR INSTALLED WITHOUT PRIOR APPROVAL BY THE ENGINEER OF THE SUBMITTALS AND SHOP DRAWINGS.

1.4 ALL WORK SHALL COMPLY WITH THE ELECTRICAL CODE APPROVED BY THE LOCAL AUTHORITY, AND ALL OTHER APPLICABLE FEDERAL, STATE AND LOCAL CODES. WHERE THE CONSTRUCTION DOCUMENTS INDICATE MORE RESTRICTIVE REQUIREMENTS, THE CONSTRUCTION DOCUMENTS SHALL GOVERN BUT THE CONSTRUCTION DOCUMENTS SHALL NOT BE INTERPRETED AS AUTHORITY TO VIOLATE ANY CODE OR REGULATION.

1.5 NOT ALL EXISTING ELECTRICAL EQUIPMENT IS SHOWN ON THE PLANS. A SURVEY OF THE JOB SITE MUST BE MADE TO DETERMINE THE EXTENT OF EXISTING ELECTRICAL EQUIPMENT.

1.6 IN THE EVENT OF A CONFLICT OR INCONSISTENCY BETWEEN ITEMS INDICATED ON THE PLANS AND/OR SPECIFICATION NOTES OR WITH CODE REQUIREMENTS, THE NOTE, SPECIFICATION OR CODE WHICH PRESCRIBES AND ESTABLISHES THE MORE COMPLETE JOB OR THE HIGHER STANDARD SHALL PREVAIL.

1.7 OMISSIONS FROM THE DRAWINGS, SPECIFICATION NOTES, OR THE OF DETAILS OF WORK WHICH ARE NECESSARY TO CARRY OUT THE INTENT OF THE DRAWINGS AND SPECIFICATIONS, OR WHICH ARE CUSTOMARILY PERFORMED, SHALL NOT RELIEVE THE CONTRACTOR FROM PERFORMING SUCH OMITTED DETAILS OF THE WORK BUT THEY SHALL BE PERFORMED AS IF FULLY AND CORRECTLY SET FORTH AND DESCRIBED IN THE DRAWINGS AND SPECIFICATIONS.

1.8 THE CONTRACTOR SHALL CHECK ALL DRAWINGS FURNISHED HIM IMMEDIATELY UPON THEIR RECEIPT AND SHALL PROMPTLY NOTIFY THE OWNER OF ANY DISCREPANCIES. FIGURES MARKED ON DRAWINGS SHALL IN GENERAL BE FOLLOWED IN PREFERENCE TO SCALE MEASUREMENTS. LARGE SCALE DRAWINGS SHALL IN GENERAL GOVERN SMALL SCALE DRAWINGS. THE CONTRACTOR SHALL COMPARE ALL DRAWINGS AND VERIFY THE FIGURES BEFORE LAYING OUT THE WORK AND WILL BE RESPONSIBLE FOR ANY ERRORS WHICH MIGHT HAVE BEEN AVOIDED THEREBY.

1.9 THE CONTRACTOR SHALL FURNISH ALL PERMITS AND PAY ALL FEES.

2.0 PRODUCTS AND MATERIALS

2.1 RACEWAYS

A. CONDUIT AND FITTINGS INSTALLED FOR MOTOR CIRCUITS, FEEDER CIRCUITS, EXPOSED TO WEATHER, OR EXPOSED WHERE SUBJECT TO MECHANICAL INJURY SHALL BE RIGID STEEL (RGS) OR INTERMEDIATE METAL CONDUIT (IMC) COMPLYING ANSI C80.1. FITTINGS SHALL BE THREADED.

B. CONDUIT AND FITTINGS INSTALLED FOR BRANCH CIRCUITS, FIRE ALARM, PAGING, SIGNAL, AND LOW VOLTAGE CIRCUITS SHALL BE ELECTRICAL METAL TUBING (EMT) COMPLYING WITH NEMA FB C80.3. EMT FITTINGS SHALL BE THE DIE CAST COMPRESSION TYPE. SET SCREW FITTINGS ARE NOT PERMITTED.

C. FINAL CONNECTIONS TO MOTORS AND VIBRATING EQUIPMENT SHALL BE MADE WITH LIQUIDTIGHT FLEXIBLE METAL CONDUIT (LFMC).

D. MINIMUM SIZE CONDUIT SHALL BE 3/4 INCH (19 MM).

E. RACEWAYS SHALL BE SECURELY SUPPORTED BY APPROVED METHODS AT FIVE FOOT (5') INTERVALS.

F. PULL BOXES ARE REQUIRED IN RUNS OVER 100 FEET, WHEN MORE THAN THE EQUIVALENT OF THREE (3) 90° BENDS ARE USED, AND AS SHOWN ON DRAWINGS.

2.2 BOXES

A. PULL AND JUNCTION BOXES AND COVERS SHALL BE FABRICATED FROM GALVANIZED NEC GAGE SHEET STEEL. OUTLET BOXES TO BE OF THE HOT-DIPPED GALVANIZED, PRESSED STEEL, KNOCKOUT TYPE. BOXES SHALL GENERALLY BE 4 INCHES SQUARE EXCEPT WHERE NOTED OTHERWISE.

2.3 WIRE AND CABLE

A. UNLESS NOTED OTHERWISE, CONDUCTORS FOR POWER AND LIGHTING SHALL BE COPPER, #12 AWG MINIMUM WITH 600 VOLT INSULATION, TYPE THHN, 90 DEGREE C, CONFORMING TO THE LATEST NEC AND SHALL BEAR UL LABEL.

B. BRANCH CIRCUIT WIRING SHALL BE SOLID COPPER WHEN #10 AWG OR SMALLER, UNLESS OTHERWISE SPECIFIED. WIRE #8 AWG AND LARGER SHALL BE STRANDED COPPER.

C. WIRE FOR SIGNAL AND CONTROL SYSTEMS SHALL BE #14 AWG, UNLESS OTHERWISE NOTED.

2.4 ELECTRICAL CONNECTIONS

A. ALL WIRE CONNECTIONS SHALL BE MADE BY MEANS OF SOLDERLESS CONNECTORS.

B. BRANCH CIRCUIT JOINTS OF SPLICES FOR WIRES #10 AND SMALLER SHALL BE MADE WITH 3M BRAND SCOTCHLOK ELECTRICAL SPRING CONNECTORS.

C. SPLICES AND JOINTS FOR CONDUCTORS NO. 8 AND LARGER SHALL BE BY MEANS OF HIGH PRESS, LONG BARREL, CAST COPPER, COMPRESSION CONNECTORS.

D. JOINT AND SPLICES SHALL BE COVERED WITH 3M ELECTRICAL TAPE TO 150% OF INSULATION VALUE.

E. NO SPLICES SHALL BE MADE IN THE CONDUCTOR EXCEPT AT OUTLET BOXES, JUNCTION BOXES, OR IN SPLICE BOXES.

2.5 PANELBOARDS

A. EXISTING PANEL BOARDS TO BE REUSED SHALL BE PROVIDED WITH UPDATED TYPE WRITTEN DIRECTORIES AFTER NEW WORK IS COMPLETED. CONTRACTOR SHALL PROVIDE NEW CIRCUIT BREAKERS TO MATCH EXISTING PANEL BOARDS AS INDICATED ON DRAWINGS.

2.6 DISCONNECT SWITCHES

A. PROVIDE HEAVY DUTY SURFACE-MOUNTED SAFETY SWITCHES FOR MOTORS UNLESS OTHERWISE INDICATED, OF TYPES, SIZES, AND ELECTRICAL CHARACTERISTICS AS INDICATED ON THE DRAWINGS AND SPECIFICATIONS. THE SWITCHES SHALL BE FUSED OR NON-FUSED AS INDICATED ON THE DRAWINGS OR AS REQUIRED AND SHALL BE MANUFACTURED BY SQUARE D, CUTLER HAMMER, OR GENERAL ELECTRIC.

B. SWITCHES SHALL HAVE SWITCH BLADES WHICH SHALL BE FULLY VISIBLE IN THE OFF POSITION WHEN THE ENCLOSURE DOOR IS OPEN. CURRENT CARRYING PARTS SHALL BE PLATED COPPER AND SWITCH CONTACTS SHALL BE SILVER-TUNGSTEN. SWITCHES SHALL BE QUICK-MADE, QUICK-BREAK TYPE. THE OPERATING HANDLE SHALL BE AN INTEGRAL PART OF THE ENCLOSURE BASE AND SHALL BE PADLOCKABLE IN THE OFF POSITION. THE HANDLE POSITION SHALL INDICATE WHETHER THE SWITCH IS ON OR OFF. SWITCHES SHALL BE HORSE POWER RATED FOR 250 AC OR DC OR 600 VOLTS AC AS REQUIRED.

C. CONTACTS: PROVIDE TWO FORM C AUXILIARY, 10 AMPERE, 300 VOLT RATED CONTACTS. THE CONTACTS SHALL PROVIDE FOR TWO NORMALLY OPEN AND TWO NORMALLY CLOSED CONTACTS FOR SWITCH OPEN OR CLOSED POSITION.

2.7 GROUNDING

A. THE COMPLETE ELECTRICAL INSTALLATION SHALL BE PERMANENTLY AND EFFECTIVELY GROUNDED IN ACCORDANCE WITH THE NATIONAL ELECTRICAL CODE AND LOCAL CODE. EQUIPMENT GROUNDING SYSTEM CABLE SHALL BE COPPER.

B. EQUIPMENT GROUNDING CONDUCTORS SHALL BE INSTALLED IN ALL RACEWAYS AND ENCLOSURES WITHIN THE BUILDING.

C. ACCESSIBLE GROUNDING CONNECTIONS SHALL BE BOLTED OR CLAMP TYPE UNLESS OTHERWISE INDICATED. SOLDERED CONNECTIONS WILL NOT BE PERMITTED IN THE GROUNDING SYSTEM.

D. WHERE CONDUITS TERMINATE AT EQUIPMENT, OR IN THE PULL BOXES OF EQUIPMENT, FOR WHICH A GROUND BUS IS SPECIFIED, PROVIDE THEM WITH BUSHINGS OF THE GROUNDING TYPE HAVING THE MAXIMUM AVAILABLE ACCOMMODATION FOR GROUND WIRES. GROUND EACH BUSHING INDIVIDUALLY TO THE EQUIPMENT GROUND BUS WITH THE CODE REQUIRED SIZE COPPER WIRE.

3.0 EXECUTION

3.1 AS A MINIMUM, ELECTRICAL WORK SHALL COMPLY WITH NECA STANDARDS AND RECOMMENDED PRACTICES FOR ELECTRICAL INSTALLATION AS APPLICABLE TO THIS PROJECT. NECA PHONE 201-215-4504.

3.2 THE CONTRACTOR SHALL MAKE POWER CONNECTIONS TO ALL MOTORS AND EQUIPMENT FURNISHED BY OTHERS. SEE MECHANICAL DRAWINGS, SPECIFICATIONS AND NOTES FOR ADDITIONAL INFORMATION.

3.3 ALL CIRCUIT BREAKERS, FUSES AND ELECTRICAL EQUIPMENT SHALL HAVE AN INTERRUPTING RATING NOT LESS THAN THE MAXIMUM SHORT CIRCUIT CURRENT TO WHICH THEY MAY BE SUBJECTED.

3.4 ALL MATERIALS AND EQUIPMENT SHALL BE NEW AND SHALL BEAR THE UNDERWRITERS' LABEL (UL) AND SHALL BE INSTALLED IN THE MANNER FOR WHICH THEY ARE DESIGNED AND APPROVED.

3.5 ALL DEVICES INSTALLED OUTSIDE OR IN DAMP LOCATIONS SHALL BE APPROVED WEATHERPROOF.

3.6 THE CONTRACTOR SHALL INSTALL ALL CONDUITS AND WIRES WITH A MINIMUM NUMBER OF BENDS AND IN SUCH A MANNER AS TO CONFORM TO THE STRUCTURE, AVOID OBSTRUCTIONS, PRESERVE HEAD ROOM, KEEP OPENINGS AND PASSAGEWAYS CLEAR AND MEET ALL STRUCTURAL CODE REQUIREMENTS.

3.7 THE CONTRACTOR SHALL NOT BORE, NOTCH OR IN ANY WAY CUT INTO ANY STRUCTURAL MEMBER WITHOUT WRITTEN APPROVAL FROM THE ARCHITECT OR STRUCTURAL ENGINEER.

3.8 THE CONTRACTOR SHALL PROVIDE SUPPORT FOR ALL FIXTURES AND ELECTRICAL EQUIPMENT TO COMPLY WITH THE SEISMIC REQUIREMENTS OF THE UNIFORM BUILDING CODE AND ALL LOCAL ORDINANCES.

3.9 ALL CONDUIT CONNECTIONS TO MOTORS, AND EQUIPMENT SUBJECT TO VIBRATION (INCLUDING TRANSFORMERS) SHALL BE MADE WITH LIQUIDTIGHT FLEX CONDUIT. FLEXIBLE CONNECTION SHALL BE BETWEEN 18 AND 36 INCHES IN LENGTH. ARRANGE CONNECTIONS TO PREVENT THE ENTRANCE OF MOISTURE. PROVIDE CONTINUOUS EQUIPMENT GROUND WIRE THROUGH ALL FLEXIBLE CONDUITS TO ASSURE GROUND CONTINUITY.

3.10 THE ENTIRE ELECTRICAL INSTALLATION SHALL BE GROUNDED AS REQUIRED BY ALL APPLICABLE CODES.

3.11 THE ENTIRE WIRING SYSTEM SHALL BE TESTED FOR SHORT CIRCUITS, GROUNDS AND INSULATION RESISTANCE BETWEEN CONDUCTORS AND TO GROUND.

3.12 THE CONTRACTOR SHALL FURNISH AND INSTALL ALL CONDUITS, WIRES, AND BOXES REQUIRED FOR A COMPLETE AND OPERATIONAL ELECTRICAL SYSTEM.

3.13 PROVIDE A EXTERNAL MANUAL DISCONNECTING MEANS AT ALL MOTORS OR PACKAGED MECHANICAL EQUIPMENT UNLESS NOTED OTHERWISE.

3.14 PROVIDE AN ENCLOSURE OF EQUAL FIRE RESISTANT RATING AROUND ALL FIXTURES AND EQUIPMENT INSTALLED IN OR PENETRATING THROUGH FIRE RATED SEPARATIONS. THROUGH STOP FIRE SEALING OF CONDUITS SHALL BE MADE WITH 3M CP25WP+ CAULK ACCORDING TO UL APPLICATION.

3.15 LOCATIONS SHOWN ON THE MECHANICAL DRAWINGS TAKE PRECEDENCE OVER THOSE SHOWN ON THE ELECTRICAL DRAWINGS. REFER TO THE MECHANICAL FOR THE EXACT LOCATIONS, RATINGS, TYPE CONNECTIONS, WIRING DIAGRAMS AND AUXILIARY DEVICES.

3.16 THE CONTRACTOR SHALL RECEIVE, STORE AND INSTALL ALL ELECTRICAL ITEMS FURNISHED BY THE OWNER.

3.17 PROVIDE TYPEWRITTEN DIRECTORY CARD IN ALL NEW AND MODIFIED PANELS. IDENTIFY LOAD SERVED BY EACH CIRCUIT BREAKER.

3.18 PROVIDE ENGRAVED NAMEPLATES ON ALL MOTOR CONTROL CENTERS, VFD(S) AND DISCONNECT SWITCHES.

3.19 THE CONTRACTOR SHALL PROVIDE A SET OF AS-BUILT DRAWINGS SHOWING THE LOCATIONS OF ALL CONDUITS, INDICATE ALL CHANGES MADE DURING CONSTRUCTION, AND ANY DEVIATIONS FROM THE ELECTRICAL DRAWINGS.

3.20 PROVIDE PULL WIRE IN ALL EMPTY CONDUITS.

3.21 FOR PURPOSES OF CLEARNESS AND LEGIBILITY, THE ELECTRICAL DRAWINGS ARE ESSENTIALLY DIAGRAMMATIC. THE SIZE AND LOCATION OF EQUIPMENT IS SHOWN TO SCALE WHEREVER POSSIBLE. THE CONTRACTOR SHALL VERIFY ALL CONDITIONS AND INFORMATION AS INDICATED ON THE DRAWINGS AND IN THE SPECIFICATION SECTIONS WHERE ELECTRICAL WORK INTERFACES WITH OTHER TRADES.

3.22 DISCONNECT AND REMOVE ALL EXISTING INTERIOR AND EXTERIOR ELECTRICAL DEVICES, EQUIPMENT, WIRING, EXPOSED ABANDONED CONDUIT, ETC..., NO LONGER REQUIRED UNLESS OTHERWISE NOTED.

3.23 THIS CONTRACTOR SHALL VISIT THE EXISTING BUILDINGS AND GROUNDS AND FAMILIARIZE HIMSELF WITH EXISTING CONDITIONS. NO ALLOWANCE WILL BE MADE SUBSEQUENTLY, ON THIS CONDITION, IN BEHALF OF THE CONTRACTOR FOR ANY ERROR OR NEGLIGENCE ON HIS PART.

3.24 WHERE EXISTING EQUIPMENT OR CONDUIT IS REMOVED OR CHANGED, ALL CONDUIT AND WIRE NO LONGER IN SERVICE SHALL BE REMOVED. ALL BUILDING SURFACES DAMAGED AND OPENINGS LEFT BY THE REMOVAL OR RELOCATION OF EQUIPMENT, CONDUIT, ETC..., SHALL BE REPAIRED BY THIS CONTRACTOR.

3.25 EXISTING CONDUIT AND WIRE SHALL NOT BE REUSED UNLESS NOTED OTHERWISE.

## GENERAL NOTES FOR DEMOLITION

1. EXAMINATION

A. THE CONTRACTOR SHALL VISIT THE SITE AND EXAMINE AREAS UNDER WHICH THE WORK IS TO BE PERFORMED AND NOTIFY THE OWNER IN WRITING OF ANY CONDITIONS DETRIMENTAL TO THE PROPER AND TIMELY COMPLETION OF THE WORK. CONTRACTOR SHALL NOT PROCEED WITH WORK UNTIL SATISFACTORY CONDITIONS HAVE BEEN CORRECTED.

B. VERIFY FIELD MEASUREMENTS AND CIRCUITING ARRANGEMENTS FOR DEVICES SHOWN ON DRAWINGS.

C. DEMOLITION DRAWINGS ARE BASED ON CASUAL FIELD OBSERVATION AND EXISTING RECORD DRAWINGS. REPORT DISCREPANCIES TO OWNER BEFORE DISTURBING EXISTING INSTALLATION.

D. COMMENCEMENT OF DEMOLITION MEANS ACCEPTANCE OF EXISTING CONDITIONS.

2. PREPARATION

A. DISCONNECT ELECTRICAL SYSTEMS IN WALLS, FLOORS, AND CEILINGS SCHEDULED FOR REMOVAL.

B. COORDINATE UTILITY SERVICE SHUT-DOWN WITH THE UTILITY COMPANY.

C. NOTIFY THE OWNER AT LEAST 48 HOURS BEFORE PARTIALLYL OR COMPLETELY DISABLING ANY ELECTRICAL SYSTEM.

D. PROVIDE TEMPORARY WIRING AND CONNECTIONS TO MAINTAIN EXISTING SYSTEMS IN SERVICE DURING CONSTRUCTION. EXPERIENCED PERSONNEL SHALL BE USED WHEN WORKING ON ENERGIZED EQUIPMENT OR CIRCUITS.

E. EXISTING ELECTRICAL SERVICE: MAINTAIN EXISTING ELECTRICAL SYSTEM IN SERVICE UNTIL NEW SERVICE IS COMPLETE AND READY FOR SERVICE. DISABLE ELECTRICAL SYSTEM ONLY TO MAKE SWITCHOVERS AND CONNECTIONS. MINIMIZE OUTAGE DURATION. MAKE TEMPORARY CONNECTIONS TO MAINTAIN ELECTRICAL SERVICE IN AREAS ADJACENT TO WORK AREA.

F. MAINTAIN EXISTING FIRE ALARM SYSTEM IN SERVICE UNTIL NEW SYSTEM IS ACCEPTED. DISABLE SYSTEM ONLY TO MAKE SWITCHOVERS AND CONNECTIONS. WHERE FIRE ALARM DEVICES MUST BE REMOVED TO ACCOMMODATE THE REMOVAL OF WALLS, NOTIFY THE OWNER AND ENGINEER IN WRITING WITH LOCATIONS OF DEVICES.

3. DEMOLITION AND EXTENSION OF EXISTING ELECTRICAL WORK.

A. REMOVE, RELOCATE, AND EXTEND EXISTING ELECTRICAL WORK AS INDICATED ON THE DRAWINGS AND AS NOTED HEREIN.

B. REMOVE ABANDONED WIRING BACK TO SOURCE OF SUPPLY.

C. WHERE SOURCE OF SUPPLY IS A PANELBOARD, RE-LABEL PROTECTIVE DEVICE AS "SPARE". AFTER DEMOLITION IS COMPLETE, SUBMIT REVISED PANELBOARD SCHEDULES INDICATING "SPARES" TO OWNER AND ENGINEER.

D. REMOVE EXPOSED ABANDONED CONDUIT ABOVE ACCESSIBLE CEILING FINISHES. CUT CONDUIT FLUSH WITH WALLS AND FLOORS, AND PATCH SURFACES.

E. DISCONNECT AND REMOVE ABANDONED OUTLETS AND ASSOCIATED DEVICES.

F. DISCONNECT AND REMOVE ABANDONED PANELBOARDS AND DISTRIBUTION EQUIPMENT.

G. DISCONNECT AND REMOVE ELECTRICAL DEVICES AND EQUIPMENT THAT IS NO LONGER IN USE.

H. DISCONNECT AND REMOVE ABANDONED LUMINARIES. REMOVE BRACKETS, STEMS, HANGERS, AND ALL OTHER ACCESSORIES.

I. REPAIR ADJACENT CONSTRUCTION AND FINISHES DAMAGED DURING DEMOLITION AND EXTENSION OF WORK.

4. CLEANING, REPAIR, AND REPLACEMENT

A. GENERAL: CLEAN AND REPAIR EXISTING MATERIALS AND EQUIPMENT THAT WILL REMAIN OR ARE TO BE REUSED.

B. PANELBOARDS: CLEAN EXPOSED SURFACES AND TIGHTEN ALL ELECTRICAL CONNECTIONS. REPLACE DAMAGED CIRCUIT BREAKERS AND PROVIDE CLOSURE PLATES FOR VACANT POSITIONS. PROVIDE TYPED SCHEDULES SHOWING REVISED CIRCUITING INFORMATION.

C. LUMINAIRES: REMOVE EXISTING LUMINAIRES FOR CLEANING. USE MILD DETERGENT TO CLEAN EXTERIOR AND INTERIOR SURFACES, RINSE CLEAN WITH CLEAN WATER AND WIPE DRY. REPLACE EXISTING LAMPS AND BALLASTS WITH NEW.

5. DISPOSAL

A. OWNER SHALL HAVE RIGHT TO RETAIN ANY EQUIPMENT OR MATERIALS THAT HAVE BEEN DEMOLISHED PRIOR TO DISPOSAL OR REMOVAL FROM SITE.

B. ANY EQUIPMENT OR MATERIALS NOT WANTED BY THE OWNER SHALL BECOME THE PROPERTY OF THE CONTRACTOR AND REMOVED FROM SITE.

C. CONTRACTOR SHALL COMPLY WITH ENVIRONMENTAL LAWS AND REGULATIONS FOR DISPOSAL OF DEMOLISHED MATERIALS AND EQUIPMENT.

## ELECTRICAL GENERAL NOTES

1. CODES

THE WORK SHALL COMPLY WITH ALL APPLICABLE LOCAL, MUNICIPAL, AND NATIONAL CODES. WHERE THE CONSTRUCTION DOCUMENTS INDICATE MORE RESTRICTIVE REQUIREMENTS THE CONSTRUCTION DOCUMENTS SHALL GOVERN. HOWEVER, THE CONSTRUCTION DOCUMENTS SHALL NOT BE INTERPRETED AS AUTHORITY TO VIOLATE ANY CODE OR REGULATION.

2. DRAWINGS AND SPECIFICATIONS

THE CONTRACTOR SHALL BE RESPONSIBLE FOR READING AND COMPLYING WITH BOTH THE DRAWINGS AND SPECIFICATIONS. IN THE EVENT OF A CONFLICT OR INCONSISTENCY BETWEEN THE DRAWINGS, NOTES, SPECIFICATIONS, OR CODES, THE REFERENCE WHICH PROVIDES THE MORE COMPLETE OR HIGHER STANDARD SHALL PREVAIL.

3. INTERPRETATION OF THE DOCUMENTS

CAREFULLY COMPARE THE DRAWINGS AND SPECIFICATIONS, CHECKING MEASUREMENTS AND CONDITIONS UNDER WHICH THIS INSTALLATION IS TO BE MADE. FOR CLARIFICATION BETWEEN VARIOUS DRAWINGS, BETWEEN DRAWINGS OR SPECIFICATION, OR BETWEEN SECTIONS OF THE SPECIFICATION, THE MATTER SHALL BE REFERRED TO THE ENGINEER BEFORE ANY WORK IS EXECUTED. THE CONTRACTOR SHALL STATE IN THEIR PROPOSAL ANY EXCEPTIONS NECESSARY TO MAKE THIS A COMPLETE, READY TO USE INSTALLATION. IF NOT STATED IN THE PROPOSAL, IT WILL NOT BE CONSIDERED EXTRA.

4. ELECTRICAL DRAWINGS

THE ELECTRICAL DRAWINGS ARE DIAGRAMMATIC AND SHALL NOT BE SCALED. THE CONTRACTOR SHALL DETERMINE THE EXACT LOCATION OF ALL DOORS, WALLS, FURNITURE, EQUIPMENT, ETC... THE LOCATION OF RACEWAY SYSTEM COMPONENTS IS SCHEMATIC. THE EXACT LOCATION OF RACEWAY SYSTEM COMPONENTS SHALL BE DETERMINED BY THE CONTRACTOR IN THE FIELD. THE CONTRACTOR SHALL CONFIRM THE DIMENSIONS OF THE ACTUAL EQUIPMENT TO BE SUPPLIED FOR THIS PROJECT, AND VERIFY CLEARANCES AND ROUGH-INS PRIOR TO STARTING WORK.

5. SITE EXAMINATION

BEFORE SUBMITTING A BID, THE CONTRACTOR SHALL VISIT THE SITE, EXAMINE THE PREMISES, AND MAKE A THOROUGH SURVEY OF THE EXISTING CONDITIONS. THE SUBMISSION OF A PROPOSAL WILL BE CONSTRUED AS EVIDENCE THAT SUCH AN EXAMINATION HAS BEEN MADE. NO CONSIDERATION OR ALLOWANCE WILL BE GRANTED FOR FAILURE TO VISIT THE SITE OR FOR LATER CLAIMS FOR LABOR, EQUIPMENT, MATERIALS REQUIRED, OR FOR DIFFICULTIES ENCOUNTERED WHICH COULD HAVE BEEN FORESEEN HAD SUCH AN SITE EXAMINATION BEEN MADE.

6. COORDINATION WITH OTHER TRADES

THE ELECTRICAL CONTRACTOR SHALL OBTAIN A COMPLETE SET OF ARCHITECTURAL AND ENGINEERING DOCUMENTS AND COORDINATE WITH MECHANICAL, PLUMBING, ARCHITECTURAL, AND OTHER TRADES FOR EXACT DIMENSIONS, CLEARANCES, ROUGH-IN LOCATIONS, AND OTHER ADDITIONAL SCOPES OF WORK THAT MAY NOT BE SHOWN ON THE ELECTRICAL PLANS. THE ELECTRICAL CONTRACTOR SHALL BE RESPONSIBLE FOR ALL 120 VOLT (AND HIGHER) AC POWER TO OTHER TRADES EQUIPMENT AND HARDWARE. THIS SHALL INCLUDE, BUT NOT BE LIMITED TO, CONTROLS, FIRE AND SECURITY SYSTEMS, MOTORIZED DOORS, DAMPERS, LIFTS, AND OTHER SYSTEMS. UNLESS SPECIFICALLY NOTED OTHERWISE ON THE ELECTRICAL PLANS, THE ELECTRICAL CONTRACTOR SHALL FURNISH ALL SAFETY DISCONNECT SWITCHES TO MECHANICAL EQUIPMENT.

7. PERMITS, APPLICATIONS AND RELEASES

THE CONTRACTOR SHALL OBTAIN AND PAY FOR ALL PERMITS INSPECTIONS, APPLICATIONS, RELEASES AND FEES REQUIRED BY LOCAL, STATE AND FEDERAL AGENCIES FOR THE EXECUTION OF THIS WORK. SCHEDULING OF ALL REQUIRED INSPECTIONS SHALL BE THE RESPONSIBILITY OF THE CONTRACTOR.

8. FIRE STOPPING

ALL PENETRATIONS IN WALL, FLOOR OR CEILINGS SHALL BE SUITABLY CLOSED UP AND SEALED WITH AN INTUMESCENT FIRE STOPPING COMPOUND LISTED IN THE MOST RECENT FACTORY MUTUAL RESEARCH CORPORATION (FMRC) APPROVAL GUIDE. FIRE STOPPING PRODUCTS SHALL BE MANUFACTURED BY 3M COMPANY OR APPROVED EQUAL.

9. PAINTING

ALL NEWLY INSTALLED EXPOSED PIPING SHALL BE PAINTED TO MATCH THE EXISTING ADJACENT WALL OR CEILING SURFACE.

10. OWNER FURNISHED EQUIPMENT

EQUIPMENT THAT WILL BE FURNISHED BY THE OWNER WILL BE INDICATED ON A SEPARATE SPECIFIED SCHEDULE. THE CONTRACTOR SHALL COORDINATE WITH THE OWNER FOR DELIVERY SCHEDULES. THE CONTRACTOR IS TO ASSUME THAT ON SITE STORAGE MAY NOT BE AVAILABLE WHEN COORDINATING DELIVERY OF EQUIPMENT. THE CONTRACTOR, IN COORDINATION WITH THE OWNER'S REPRESENTATIVE, WILL INSPECT THE DELIVERY FOR ACCURACY AND SHIPMENT DAMAGE AND ACCEPTING THE EQUIPMENT. THE CONTRACTOR SHALL BE RESPONSIBLE TO STORE, PROTECT AND ULTIMATELY INSTALL THE EQUIPMENT.

11. ELECTRICAL SERVICE DISRUPTIONS

ALL WORK WHICH EXPOSES ACTIVE BUS REQUIRES A WRITTEN NOTIFICATION TO THE OWNER WHICH WILL OUTLINE THE METHOD OF PROCEDURE FOR THE WORK. THE CONTRACTOR SHALL PROVIDE A MINIMUM OF 5 DAYS NOTICE TO THE OWNER BEFORE WORKING ON ANY ENERGIZED ELECTRICAL SYSTEM. ALL POWER DISRUPTION SHALL OCCUR AT TIMES AND OF DURATIONS ACCEPTABLE TO THE OWNER.

12. EQUIPMENT

ALL MATERIALS AND EQUIPMENT USED IN THIS INSTALLATION SHALL BE NEW, AND HAVE THE APPROPRIATE UL LISTING AND LABEL.

13. MISCELLANEOUS SUPPORTING MEMBERS

ALL ANGLES CHANNELS, AND OTHER MISCELLANEOUS STEEL, BOLTS, RODS, ETC... REQUIRED TO SUPPORT LIGHT FIXTURE, CONDUIT, RACEWAY, LADDER TRAY, OR OTHER ELECTRICAL EQUIPMENT OR DEVICES SHALL BE FURNISHED AND INSTALLED BY THE CONTRACTOR.

14. PANELBOARDS

ALL PANELBOARDS SHALL BE PROVIDED WITH TYPEWRITTEN DIRECTORIES. SEE PANEL SCHEDULES ON THE DRAWINGS AND SPECIFICATIONS FOR COMPLETE IDENTIFICATION AND LABELING REQUIREMENTS.

15. SAFETY

THE CONTRACTOR SHALL TAKE ALL STEPS NECESSARY TO ENSURE THE SAFETY OF THE OWNERS EMPLOYEES, BUILDING EMPLOYEES AND GUESTS, AS WELL AS THEIR OWN FORCES, BY ADEQUATELY PROTECTING ANY EXPOSED LIVE CONDUCTORS, OR DEVICES THROUGHOUT THE COURSE OF THIS WORK.

COMPLY WITH NFPA 241 FOR SAFEGUARDING DURING CONSTRUCTION AND ALTERATION OPERATIONS. IN ADDITION, ANY OPENINGS IN FIRE RATED SEPARATIONS BETWEEN OCCUPIED AND UNOCCUPIED (OR OPERATIONAL AND NON-OPERATIONAL) AREAS SHALL BE SEALED AT THE END OF EACH WORK DAY WITH AN APPROPRIATE FIRE RATED ENCLOSURE OR SEALANT. DO NOT COMPROMISE EXISTING SECURITY OR FIRE ALARM SYSTEMS SERVING THE OCCUPIED OR OPERATIONAL AREAS.

16. EQUIPMENT CONNECTIONS

PROVIDE FINAL ELECTRICAL CONNECTIONS TO ALL EQUIPMENT FURNISHED UNDER OTHER TRADES AND FOR ALL OWNER FURNISHED EQUIPMENT. PROVIDE A FLEXIBLE LIQUID TIGHT CONNECTION TO ALL VIBRATION PRODUCING EQUIPMENT.

17. INTERFERENCE WITH OCCUPANCY

THE PRESENT BUILDING IS OCCUPIED AND WILL CONTINUE TO BE DURING THE PROGRESS OF THIS WORK. IT IS IMPERATIVE, THEREFORE, THAT THE WORK COVERED BY THESE DOCUMENTS BE EXECUTED WITH A MINIMUM OF INCONVENIENCE TO THE BUILDING PERSONNEL, AND OTHER TENANTS.

18. TEMPORARY REQUIREMENTS

PROVIDE TEMPORARY LIGHTING, POWER, AND FIRE ALARM COMPONENTS AS REQUIRED IN AREAS UNDERGOING WORK DURING CONSTRUCTION.

FURNISH AND INSTALL ONE OSHA APPROVED PIGTAIL SOCKET WITH 150-WATT LAMP FOR EVERY 500 SQUARE FEET OF FLOOR SPACE AND A MINIMUM 1 PER ROOM. THE TEMPORARY LIGHTING SHALL BE LEFT IN PLACE UNTIL PERMANENT LIGHTING IS COMPLETELY OPERATIONAL.

FURNISH AND INSTALL POWER OUTLETS TO A TOTAL ONE FOR EVERY 2000 SQUARE FEET OR PART THEREOF OF FLOOR AREA AND THESE SHALL BE 15 AMP, SINGLE PHASE RECEPTACLES FOR EITHER 110 OR 220 VOLTS AS DIRECTED BY THE GENERAL CONTRACTOR. COORDINATE FOR ADDITIONAL TEMPORARY POWER REQUIREMENTS WITH OTHER TRADES AND PROVIDE AN ADEQUATE INSTALLATION.

FURNISH AND INSTALL AN APPROVED TEMPORARY FIRE ALARM SYSTEM AS REQUIRED BY LOCAL CODES AND AUTHORITY HAVING JURISDICTION.

ALL TEMPORARY ELECTRICAL EQUIPMENT SHALL BE REMOVED BEFORE THE AREA CEILINGS ARE INSTALLED.

19. UTILITY POWER COORDINATION

THE CONTRACTOR SHALL PERFORM ALL COORDINATION AND SCHEDULING OF LOCAL UTILITY POWER COMPANY WORK EFFORT. ANY EXCESS FACILITIES CHARGES WILL BE PAID BY THE OWNER WITHOUT MARK-UP. CONTRACTOR SHALL PROVIDE ALL WORK REQUIRED FOR THE NEW ELECTRICAL SERVICE.

20. CABLING

BRANCH CIRCUITS TO RECEPTACLES, LIGHTING AND MISC. SMALL LOADS (15 OR 20 AMP CIRCUITS), UNLESS SPECIFICALLY NOTED OTHERWISE, SHALL BE 2#12, 1#12G. - 3/4" C. SEE NOTE BELOW FOR ADDITIONAL REQUIREMENTS. MINIMUM SIZE WIRE SHALL BE #12 AWG AND MINIMUM SIZE CONDUIT SHALL BE 3/4" TRADE SIZE.

21. CABLING SIZES

BRANCH CIRCUIT CABLE SIZING SHALL BE BASED ON THE VALUES INDICATED BELOW:

A. 120/208V CABLING FROM PANEL TO THE ELECTRICAL LOAD SHALL BE ADJUSTED AS FOLLOWS UNLESS SPECIFICALLY NOTED OTHERWISE:

0' - 100' #12 AWG MINIMUM
100' - 200' #10 AWG MINIMUM
200' - 250' #8 AWG MINIMUM

B. 277/480V CABLING FROM PANEL TO THE ELECTRICAL LOAD SHALL BE ADJUSTED AS FOLLOWS UNLESS SPECIFICALLY NOTED OTHERWISE:

0' - 150' #12 AWG MINIMUM
150' - 250' #10 AWG MINIMUM
250' - 300' #8 AWG MINIMUM

22. SPECIAL LUG REQUIREMENTS

ANY CABLE WHICH TERMINATES DIRECTLY ON TO A BUS BAR SHALL BE 2 BOLT LONG BARREL TYPE WITH INSPECTION HOLES PRODUCED WITH NON FLASHING TYPE DYES AS MANUFACTURED BY THOMAS AND BETTS OR APPROVED EQUAL, MINIMUM 10 TONS OF COMPRESSION, HEX CRIMP. THE USE OF HEAT SHRINK TUBING IS EXPLICITLY FORBIDDEN. THERE SHALL BE NO "SHINERS" AT THE LUGS.

### EQUIPMENT

| TAG | EQUIPMENT | LOAD | | | | FED FROM | | | | CONDUIT AND CABLE | DISCONNECT | | | | VFD | REMARKS |
|---|---|---|---|---|---|---|---|---|---|---|---|---|---|---|---|---|
| | | V/Ø/Hz | CAPACITY (kW) | FULL LOAD (AMPS) | MOTOR RATED POWER (HP) | SOURCE NAME | CIRCUIT BREAKER (AMP-POLE) | SWITCH SIZE (AMP-POLE) | FUSE SIZE (AMPS) | | SWITCH SIZE (AMP-POLE) | FUSE SIZE (AMP-POLE) | NEMA ENCLOSURE | FURNISHED BY | FURNISHED BY(1) | |
| CWP-6 | CHILLER WATER PUMP | 480/3 | - | 40 | 30 | MCC-PN | 70A-3P | * | * | 3#4, 1#8G. - 1 1/4"C. | - | - | - | - | MECHANICAL | EXTEND EXISTING FEEDER FROM MCC TO NEW VFD LOCATION. |
| CWP-6A | CHILLER WATER PUMP | 480/3 | - | 40 | 30 | MCC-PN | 70A-3P | * | * | 3#4, 1#8G. - 1 1/4"C. | - | - | - | - | MECHANICAL | EXTEND EXISTING FEEDER FROM MCC TO NEW VFD LOCATION. |
| ACC-A1 | EAST CHILLER | 480/3 | - | 376 | - | MSB-2 | - | 600A-3P | 400A | 3# 500 KCMIL, 1#3G. - 3"C. | - | - | - | - | - | SEE NOTE (2) AND (3) |
| ACC-A2 | WEST CHILLER | 480/3 | - | 376 | - | MSB-2 | - | 600A-3P | 400A | 3# 500 KCMIL, 1#1/0G. - 3"C. | - | - | - | - | - | SEE NOTE (2) AND (4) |

NOTES:
(1) WHERE VFD'S ARE SHOWN FURNISHED BY THE MECHANICAL CONTRACTOR, ELECTRICAL CONTRACTOR SHALL INSTALL AND WIRE
(2) PROVIDE NEW FUSES IN EXISTING SWITCH.
(3) PROVIDE NEW FEEDER IN EXISTING CONDUIT.
(4) EXISTING FEEDER TO BE REUSED WITH NEW CHILLER.

### POWER SYMBOLS

| DESIGNATION | DESCRIPTION |
|---|---|
| J | CEILING MOUNTED JUNCTION BOX |
| X / Y | EQUIPMENT TAG SEE EQUIPMENT SCHEDULE |
| | FLEXIBLE CONDUIT |
| M | MOTOR M=HP |
| VFD | VARIABLE FREQUENCY DRIVE |
| | MOTOR CONTROL CENTER |

Grumman/Butkus Associates
Energy Efficiency Consultants and Sustainable Design Engineers
820 Davis St, Ste 300
Evanston, Illinois 60201 4446
847 328.3555 www.grummanbutkus.com
Copyright © 2013 Grumman/Butkus Associates Illinois Registration #184-000926

ISSUES & REVISIONS

| NO. | DESCRIPTION | DATE |
|---|---|---|
| | 100% OWNER REVIEW | 11/15/13 |
| | ISSUED FOR BID | 11/22/13 |
| | ISSUED FOR PERMIT | |

ELECTRICAL SYMBOLS, GENERAL NOTES AND SPECIFICATIONS

AIR-COOLED CHILLER REPLACEMENT
McHENRY COUNTY GOVERNMENT CENTER
2200 NORTH SEMINARY AVENUE
WOODSTOCK, IL 60098

DATE 2013/10/07
SCALE NONE
DRAWN MDM
CHECKED SDG
APPROVED JDV
JOB NO. P13-0334-00

E0.1

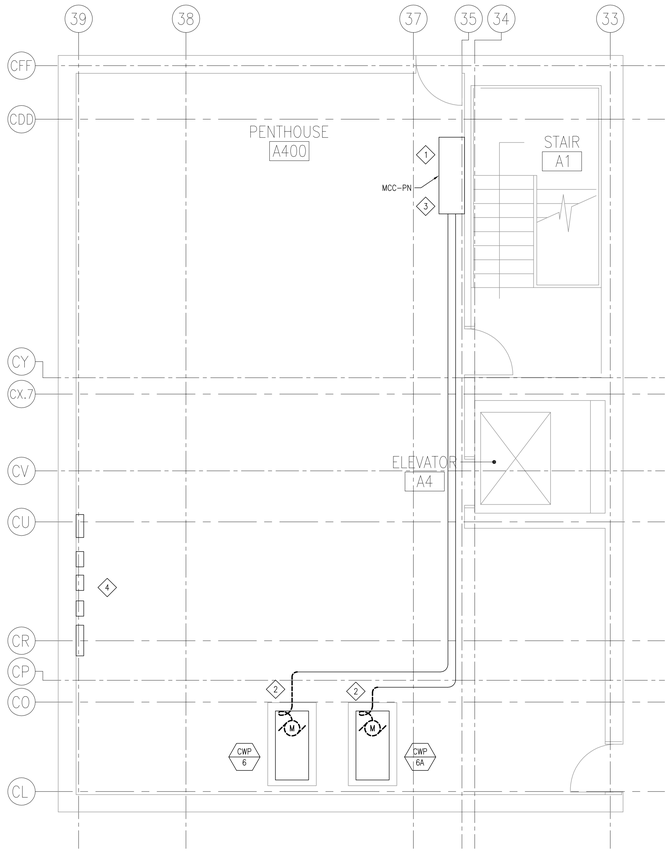


1 PENTHOUSE PLAN - DEMOLITION

Scale: 1/4" = 1'-0"

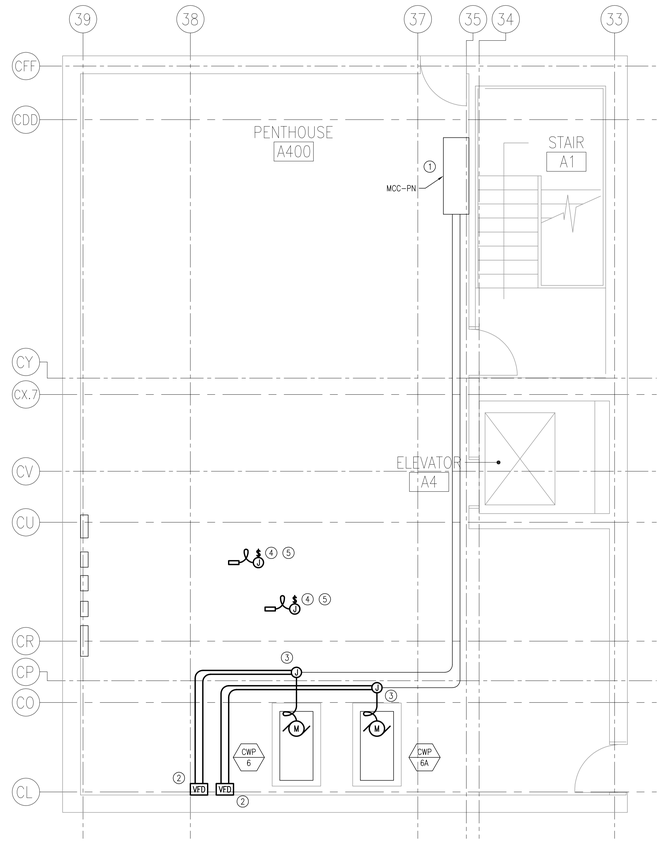


2 PENTHOUSE PLAN - NEW WORK

Scale: 1/4" = 1'-0"

## GENERAL NOTES

A. FIELD VERIFY EXACT LOCATION OF ALL EXISTING EQUIPMENT PRIOR TO STARTING DEMOLITION.

B. VERIFY EXACT LOCATION OF ALL NEW EQUIPMENT WITH MECHANICAL CONTRACTOR PRIOR TO ROUGH-IN.

## DEMOLITION PLAN NOTES

1. EXISTING MOTOR CONTROL CENTER TO REMAIN. PROTECT FROM DAMAGE DURING DEMOLITION AND CONSTRUCTION.
2. EXISTING PUMPS TO BE DEMOLISHED. DISCONNECT WIRING AND CONDUIT FEEDING PUMPS CWP-6 AND CWP-6A. EXISTING FEEDER FROM MCC-PN TO REMAIN FOR USE WITH NEW PUMP INSTALLATION.
3. DISCONNECT FEEDERS TO COMBINATION STARTER/DISCONNECT SWITCHES SERVING CWP-6 AND CWP-6A. LABEL BUCKETS AS "SPARE".
4. EXISTING BAS PANELS TO REMAIN. PROTECT FROM DAMAGE DURING DEMOLITION AND CONSTRUCTION.

## CONSTRUCTION PLAN NOTES

1. PROVIDE TWO (2) NEW CIRCUIT BREAKERS TO MATCH EXISTING MOTOR CONTROL CENTER. EXTEND EXISTING PUMP FEEDERS TO NEW MCC SPACES AS REQUIRED.
2. NEW VFDs TO BE FURNISHED BY MECHANICAL CONTRACTOR, INSTALLED AND WIRED BY ELECTRICAL CONTRACTOR. FIELD VERIFY NEW LOCATION HAS CODE REQUIRED WORKING CLEARANCES. PROVIDE CONDUIT AND WIRING FOR CONNECTION TO BAS CONTROLS AS REQUIRED. VERIFY WIRING REQUIREMENTS WITH MECHANICAL CONTRACTOR PRIOR TO ROUGH-IN.
3. INTERCEPT EXISTING FEEDERS AND EXTEND FEEDERS TO NEW VFDs AS REQUIRED.
4. PROVIDE 120 VOLT CONNECTION TO NEW MODULATING AUTOMATIC ISOLATION VALVE. CONNECT TO SPARE 20A,1P CIRCUIT BREAKER IN EXISTING PANEL LP3A IN ELECTRICAL CLOSET ON THE FLOOR BELOW. CONNECTION TO BE MADE WITH 2#12, 1#12G. IN 3/4" CONDUIT. VERIFY EXACT CONNECTION LOCATION WITH MECHANICAL CONTRACTOR PRIOR TO ROUGH-IN.
5. PROVIDE CONDUIT AND WIRING FOR CONNECTION TO BAS CONTROLS AS REQUIRED. VERIFY WIRING REQUIREMENTS WITH MECHANICAL CONTRACTOR PRIOR TO ROUGH-IN.


Grumman/Butkus Associates
Energy Efficiency Consultants and Sustainable Design Engineers
820 Davis St, Ste 300
Evanston, Illinois 60201 4446
847 328.3555 www.grummanbutkus.com


Copyright © 2013 Grumman/Butkus Associates Illinois Registration: #184-000926


| ISSUES & REVISIONS | | |
|---|---|---|
| NO. | DESCRIPTION | DATE |
| | 100% OWNER REVIEW | 11/15/13 |
| | ISSUED FOR BID | 11/22/13 |
| | ISSUED FOR PERMIT | |

PENTHOUSE ELECTRICAL PLAN - DEMOLITION AND NEW WORK

AIR-COOLED CHILLER REPLACEMENT
McHENRY COUNTY GOVERNMENT CENTER
2200 NORTH SEMINARY AVENUE
WOODSTOCK, IL 60098

| | |
|---|---|
| DATE | 2013/10/07 |
| SCALE | 1/4"=1'-0" |
| DRAWN | MDM |
| CHECKED | SDC |
| APPROVED | JDV |
| JOB NO. | P13-0334-00 |

E1.0

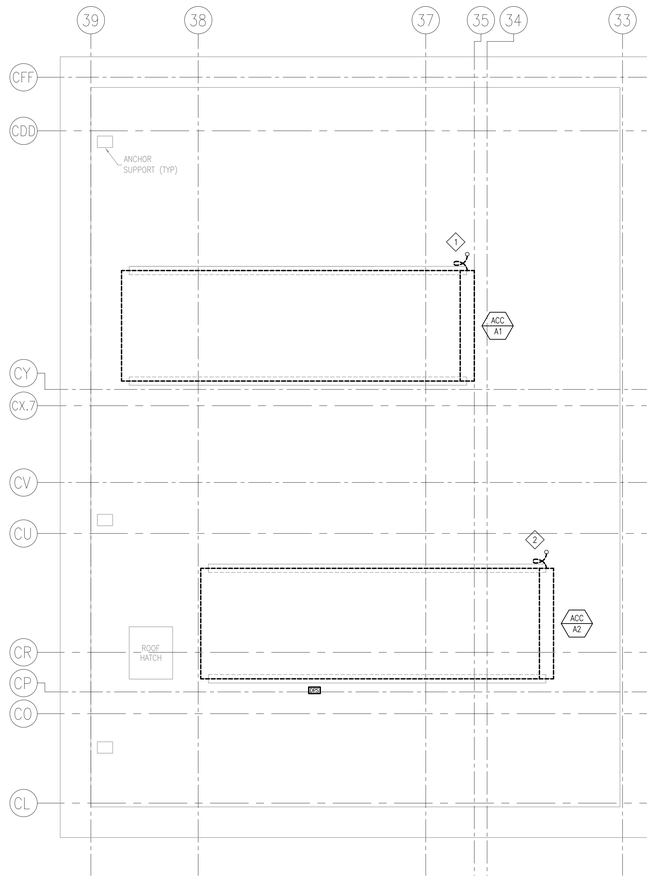


1 ROOF ELECTRICAL PLAN - DEMOLITION
Scale: 1/4" = 1'-0"

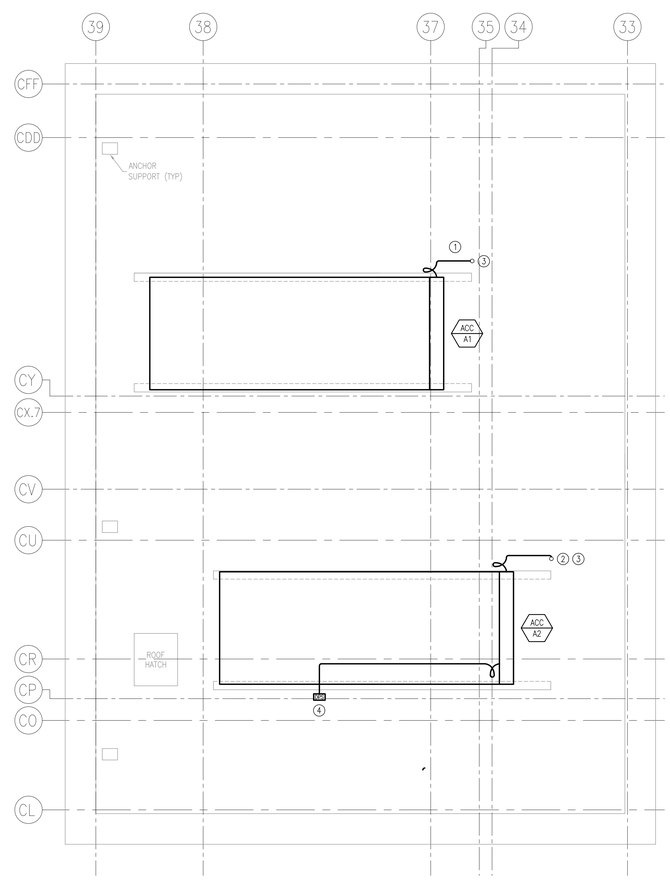


2 ROOF ELECTRICAL PLAN - NEW WORK
Scale: 1/4" = 1'-0"

## GENERAL NOTES

A. FIELD VERIFY EXACT LOCATION OF ALL EXISTING EQUIPMENT PRIOR TO STARTING DEMOLITION.

B. VERIFY EXACT LOCATION OF ALL NEW EQUIPMENT WITH MECHANICAL CONTRACTOR PRIOR TO ROUGH-IN.

## DEMOLITION PLAN NOTES

1. EXISTING CHILLER ACC-A1 TO BE DEMOLISHED. EXISTING FEEDER TO BE DISCONNECTED AND REMOVED BACK TO SWITCHBOARD MSB-2 IN THE BASEMENT. EXISTING 3" CONDUIT TO REMAIN AND BE REUSED WITH NEW INSTALLATION.

2. EXISTING CHILLER ACC-A2 TO BE DEMOLISHED. DISCONNECT EXISTING FEEDER FROM CHILLER TO BE DEMOLISHED. EXISTING FEEDER TO REMAIN AND BE REUSED WITH NEW INSTALLATION.

## CONSTRUCTION PLAN NOTES

1. PROVIDE NEW FEEDER TO NEW CHILLER ACC-A1. NEW FEEDER TO BE INSTALLED IN EXISTING 3" CONDUIT FROM EXISTING SWITCHBOARD MSB-2 IN BASEMENT. PROVIDE NEW FUSES IN EXISTING 600A SWITCH IN MSB-2.

2. EXTEND EXISTING FEEDER TO NEW CHILLER ACC-A2 LOCATION AS REQUIRED. PROVIDE NEW FUSES IN EXISTING 600A SWITCH IN MSB-2.

3. STUB ONE (1) 1/2" CONDUIT DOWN INTO PENTHOUSE FOR USE BY BAS CONTRACTOR. CONDUIT SHALL BE INSTALLED IN SAME 5" DIAMETER ROOF PENETRATION AS EXISTING 3" CONDUIT FOR CHILLER POWER FEED. RESEAL AND FLASH ROOF PENETRATION AS REQUIRED.

4. PROVIDE ONE (1) 1/2" CONDUIT FOR PRESSURE SWITCH FOR USE BY BAS CONTRACTOR FOR DIFFERENTIAL PRESSURE FLOW SWITCH (BY OTHERS).


Grumman/Butkus Associates
Energy Efficiency Consultants and Sustainable Design Engineers
820 Davis St, Ste 300
Evanston, Illinois 60201 4446
847 328.3555 www.grummanbutkus.com


Copyright © 2013 Grumman/Butkus Associates Illinois Registration: #184-000926


| ISSUES & REVISIONS | | |
|---|---|---|
| NO. | DESCRIPTION | DATE |
| | 100% OWNER REVIEW | 11/15/13 |
| | ISSUED FOR BID | 11/22/13 |
| | ISSUED FOR PERMIT | |

ROOF ELECTRICAL PLAN - DEMOLITION AND NEW WORK

AIR-COOLED CHILLER REPLACEMENT
McHENRY COUNTY GOVERNMENT CENTER
2200 NORTH SEMINARY AVENUE
WOODSTOCK, IL 60098

| | |
|---|---|
| DATE | 2013/10/07 |
| SCALE | 1/4"=1'-0" |
| DRAWN | MDM |
| CHECKED | SDG |
| APPROVED | JDV |
| JOB NO. | P13-034-00 |

E2.0

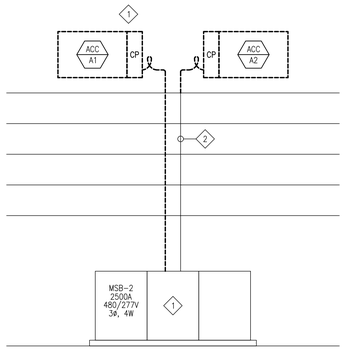


1 PARTIAL RISER DIAGRAM - DEMOLITION

Scale: NONE

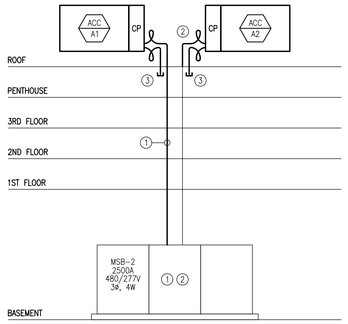


2 PARTIAL RISER DIAGRAM - NEW WORK

Scale: NONE

## GENERAL NOTES

A. FIELD VERIFY EXACT LOCATION OF ALL EXISTING EQUIPMENT PRIOR TO STARTING DEMOLITION.

B. VERIFY EXACT LOCATION OF ALL NEW EQUIPMENT WITH MECHANICAL CONTRACTOR PRIOR TO ROUGH-IN.

## DEMOLITION PLAN NOTES

1. EXISTING CHILLER ACC-A1 TO BE DEMOLISHED. EXISTING FEEDER TO BE DISCONNECTED AND REMOVED BACK TO SWITCHBOARD MSB-2 IN THE BASEMENT. EXISTING 3" CONDUIT TO REMAIN AND BE REUSED WITH NEW INSTALLATION.

2. EXISTING CHILLER ACC-A2 TO BE DEMOLISHED. DISCONNECT EXISTING FEEDER FROM CHILLER TO BE DEMOLISHED. EXISTING FEEDER TO REMAIN AND BE REUSED WITH NEW INSTALLATION.

## CONSTRUCTION PLAN NOTES

1. PROVIDE NEW FEEDER TO NEW CHILLER ACC-A1. NEW FEEDER TO BE INSTALLED IN EXISTING 3" CONDUIT FROM EXISTING SWITCHBOARD MSB-2 IN BASEMENT. PROVIDE NEW FUSES IN EXISTING 600A SWITCH IN MSB-2.

2. EXTEND EXISTING FEEDER TO NEW CHILLER ACC-A2 LOCATION AS REQUIRED. PROVIDE NEW FUSES IN EXISTING 600A SWITCH IN MSB-2.

3. STUB ONE (1) 1/2" CONDUIT DOWN INTO PENTHOUSE FOR USE BY BAS CONTRACTOR. CONDUIT SHALL BE INSTALLED IN SAME 5" DIAMETER ROOF PENETRATION AS EXISTING 3" CONDUIT FOR CHILLER POWER FEED. RESEAL AND FLASH ROOF PENETRATION AS REQUIRED.


Grumman/Butkus Associates
Energy Efficiency Consultants and Sustainable Design Engineers
820 Davis St, Ste 300
Evanston, Illinois 60201 4446
847 328.3555 www.grummanbutkus.com


Copyright © 2013 Grumman/Butkus Associates Illinois Registration #184-000926


ISSUES & REVISIONS

| NO. | DESCRIPTION | DATE |
|---|---|---|
| | 100% OWNER REVIEW | 11/15/13 |
| | ISSUED FOR BID | 11/22/13 |
| | ISSUED FOR PERMIT | |

PARTIAL ELECTRICAL RISER DIAGRAMS - DEMOLITION AND NEW WORK

AIR-COOLED CHILLER REPLACEMENT
McHENRY COUNTY GOVERNMENT CENTER
2200 NORTH SEMINARY AVENUE
WOODSTOCK, IL 60098

DATE 2013/10/07
SCALE NONE
DRAWN MDM
CHECKED SDG
APPROVED JDV
JOB NO. P13-0334-00

E3.0

**SPECIFICATIONS**

**DIVISION 01 - GENERAL REQUIREMENTS**


SECTION 01 3103 STARTING OF SYSTEMS
SECTION 01 3300 SUBMITTALS
SECTION 01 4000 QUALITY CONTROL SERVICES
SECTION 01 6000 MATERIAL AND EQUIPMENT
SECTION 01 7700 PROJECT CLOSEOUT


**DIVISION 20 – COMMON REQUIREMENTS FOR MECHANICAL, PLUMBING, AND FIRE SUPPRESSION**


SECTION 20 0500 BASIC REQUIREMENTS FOR MECHANICAL, PLUMBING, AND FIRE SUPPRESSION
SECTION 20 0501 MINOR MECHANICAL, PLUMBING, AND FIRE SUPPRESSION DEMOLITION
SECTION 20 0513 MOTOR REQUIREMENTS FOR MECHANICAL, PLUMBING, AND FIRE SUPPRESSION EQUIPMENT
SECTION 20 0519 METERS AND GAUGES FOR MECHANICAL, PLUMBING, AND FIRE SUPPRESSION
SECTION 20 0529 HANGERS AND SUPPORTS FOR MECHANICAL, PLUMBING AND FIRE SUPPRESSION SYSTEMS
SECTION 20 0700 THERMAL INSULATION FOR MECHANICAL, PLUMBING, AND FIRE SUPPRESSION
SECTION 20 2923 VARIABLE FREQUENCY DRIVES FOR MECHANICAL, PLUMBING, AND FIRE SUPPRESSION


**DIVISION 23 - MECHANICAL**


SECTION 23 0100 COMMON WORK REQUIREMENTS FOR MECHANICAL
SECTION 23 0593 TESTING, ADJUSTING, AND BALANCING FOR HVAC
SECTION 23 0900 BASIC TEMPERATURE CONTROL REQUIREMENTS
SECTION 23 0901 TEMPERATURE CONTROL HARDWARE
SECTION 23 0902 TEMPERATURE CONTROL SOFTWARE
SECTION 23 0903 TEMPERATURE CONTROL CONDUIT
SECTION 23 0904 TEMPERATURE CONTROL WIRING
SECTION 23 0906 TEMPERATURE CONTROL DEMOLITION
SECTION 23 2113 HYDRONIC PIPING AND SPECIALTIES
SECTION 23 2500 PIPE CLEANING, FLUSHING, AND CHEMICAL TREATMENT
SECTION 23 6423 AIR-COOLED LIQUID CHILLERS

**SECTION 01 3103**
**STARTING OF SYSTEMS**

## PART 1 - GENERAL

### 1.1 SECTION INCLUDES

A. Starting systems

B. Demonstration and instructions

C. Testing, adjusting and balancing

### 1.2 STARTING SYSTEMS

A. Coordinate schedule for start-up of various equipment and systems.

B. Notify Engineer and Owner seven days prior to start-up of each item.

C. Verify that each piece of equipment or system has been checked for proper lubrication, drive rotation, belt tension, control sequence, or other conditions which may cause damage.

D. Verify that tests, meter readings and specified electrical characteristics agree with those required by the equipment or system manufacturer.

E. Verify wiring and support components for equipment are complete and tested.

F. Verify utilities, connections and controls are complete and equipment is in operable condition.

G. Observe start-up and adjustments: Record time and date of start-up and results.

H. Observe equipment demonstrations to Owner: Record times and additional information required for Operation and Maintenance Manuals.

I. Execute start-up under supervision of responsible manufacturer's representative in accordance with manufacturers' instructions.

J. When specified in individual specification Sections, require manufacturer to provide authorized representative to be present at site to inspect, check and approve equipment or system installation prior to start-up and to supervise placing equipment or system in operation.

K. Submit a written report in accordance with Division 01 Section 01 400, "Quality Control Services," that equipment or system has been properly installed and is functioning correctly.

### 1.3 DEMONSTRATION AND INSTRUCTIONS

A. Demonstrate operation and maintenance of Products to Owner's personnel two weeks prior to date of Substantial Completion.

B. Demonstration and instructions shall be provided by a qualified manufacturers' representative who is knowledgeable about the Project.

C. Utilize operation and maintenance manuals as basis for instruction. Review contents of manual with Owners' personnel in detail to explain all aspects of operation and maintenance.

D. Demonstrate start-up, operation, control, adjustment, trouble-shooting, servicing, maintenance and shutdown of each item of equipment at agreed-upon times, at equipment location.

E. Prepare and insert additional data in operations and maintenance manuals when need for additional data becomes apparent during instruction.

F. The amount of time required for instruction on each item of equipment and system is that specified in individual sections.

**1.4 INSPECTION AND ACCEPTANCE OF EQUIPMENT**

A. Prior to inspection, verify that equipment is tested, operational and clean.

B. Assist Engineer with inspection. Prepare list of items to be completed and corrected.

**1.5 TESTING, ADJUSTING AND BALANCING**

A. The independent firm will perform services specified in Division 23 Section 23 0593, "Testing, Adjusting, and Balancing for HVAC," except for factory tests.

B. Reports will be submitted by the independent firm to the Engineer indicating observations and results of tests and indicating compliance or non-compliance with specified requirements and with the requirements of the Contract Documents.

**1.6 ADJUSTING**

A. Adjust operating products and equipment to ensure smooth and unhindered operation.

**PART 2 - PRODUCTS**

Not Applicable

**PART 3 - EXECUTION**

Not Applicable

END OF SECTION

P:\13 PROJECTS\P13-0334-00MCHENRY\04 DESIGN\11 SPECS\CONSTRUCTION SPECS\01 3103-STARTING OF SYSTEMS.DOCX

**SECTION 01 3300**
**SUBMITTALS**

## PART 1 - GENERAL

### 1.1 SECTION INCLUDES

A. Submittal procedures

B. Proposed products list

C. Contractor-prepared shop drawings

D. Preventive maintenance (PM) tasks/schedule

E. Product data

F. Samples

G. Manufacturers' instructions

H. Manufacturers' certificates

### 1.2 SUBMITTAL PROCEDURES

A. Refer also to provisions of the General Conditions.

B. Identify Project, Contractor, Subcontractor or supplier; pertinent Drawing sheet, equipment tag, system designation number(s) and specification Section number, as appropriate.

C. Where possible, submit shop drawings and product data grouped to include complete submittals of related systems, products and accessories in a single submittal so long as this does not delay individual items whose review is time-critical.

D. If only part of required drawings in one group are submitted, action will be withheld on them until remaining drawings are submitted.

E. Catalog cuts showing more than one model of a product shall be clearly marked indicating which model is being proposed.

F. Capacity and performance data shall be given in same form, units and completeness presented in Contract Documents.

G. Identifying symbols and tags used on drawings shall be clearly cross-referenced on shop drawings.

H. Identify room names and numbers in which various products will be used.

I. Schedule submittals to expedite the Project and deliver to Engineer at business address. Electronic submittals are also acceptable.

J. Mark in units to match those specified.

K. Provide space for Contractor and Engineer review stamps.

L. Apply Contractor's stamp, signed or initialed, certifying that review, verification of Products required, field dimensions, adjacent construction Work and coordination of information is in accordance with the requirements of the Work and Contract Documents.

M. Identify variations from Contract Documents and Product or system limitations which may be detrimental to successful performance of the completed Work.

N. Revise and resubmit submittals as required, identifying all changes made since previous submittal.

O. Distribute copies of reviewed submittals to concerned parties. Instruct parties to promptly report any inability to comply with provisions.

**1.3 CONSTRUCTION PROGRESS SCHEDULES**

A. Submit estimated progress schedule in duplicate within 10 days after date of Owner-Contractor Agreement established in Notice to Proceed] for Engineer review.

B. Revise and resubmit as required.

C. Revise and resubmit work schedule affected by accepted alternates.

**1.4 PROPOSED PRODUCTS LIST**

Not Applicable

**1.5 CONTRACTOR-PREPARED SHOP DRAWINGS**

A. Submit in the form of electronic document AutoCAD or pdf format.

B. After review, reproduce and distribute copies in accordance with Paragraph on Procedures above and for Record Documents described in Division 01 Section 01 7700, "Project Closeout."

C. Submit ¼" scale floor plans indicating proposed routing of new piping, electrical and duct systems, new and relocated equipment locations and connection points to existing services including sections through equipment and piping diagrams of all connections.

D. Identify equipment, pipe risers, duct risers, column lines, etc., with designations shown on Contract Documents.

**1.6 PREVENTIVE MAINTENANCE (PM) TASKS/SCHEDULE**

A. Within 10 days after date of Notice to Proceed, submit complete listing of PM tasks.

**1.7 PRODUCT DATA**

A. Submit the number of copies as established at the preconstruction conference.

B. Mark each copy to identify applicable products, models, systems, equipment tags and other data. Supplement manufacturers' standard data to provide information unique to this Project.

C. After review, distribute in accordance with Article on Procedures above and provide copies for Record Documents described in Division 01 Section 01 7700, "Project Closeout."

**1.8 SAMPLES**

Not Applicable

**1.9 MANUFACTURER'S INSTRUCTIONS**

A. When specified in individual specification Sections, submit manufacturers' printed instructions for delivery, storage, assembly, installation, start-up, adjusting, testing, in quantities specified for Product Data.

B. Identify conflicts between manufacturers' instructions and Contract Documents.

**1.10 MANUFACTURER'S CERTIFICATES**

A. When specified in individual specification Sections, submit manufacturer's certificate to Engineer for review in quantities specified for Product Data.

B. Indicate that material or product conforms to or exceeds specified requirements. Submit supporting reference data, affidavits and certifications as appropriate.

C. Certificates may be recent or previous test results on material or Product but must be acceptable to Engineer.

**PART 2 - PRODUCTS**

Not Applicable

**PART 3 - EXECUTION**

Not Applicable

END OF SECTION

P:\13 PROJECTS\P13-0334-00MCHENRY\04 DESIGN\11 SPECS\CONSTRUCTION SPECS\01 3300-SUBMITTALS.DOCX

# SECTION 01 4000
# QUALITY CONTROL SERVICES

## PART 1 - GENERAL

### 1.1 SECTION INCLUDES

A. Quality assurance and control of installation

B. References

C. Manufacturers' field services and reports

### 1.2 QUALITY ASSURANCE/CONTROL OF INSTALLATION

A. Monitor quality control over suppliers, manufacturers, Products, services, site conditions and workmanship to produce Work of specified quality.

B. Comply fully with manufacturers' instructions, including each step in sequence.

C. Should manufacturers' instructions conflict with Contract Documents, request clarification from Engineer before proceeding.

D. Comply with specified standards as a minimum quality for the Work except when more stringent tolerances, codes or specified requirements indicate higher standards or more precise workmanship.

E. Work to be performed by persons qualified to produce workmanship of specified quality.

F. Secure Products in place with positive anchorage devices designed and sized to withstand stresses, vibration, physical distortion or disfigurement.

### 1.3 REFERENCES

A. Conform to reference standard by date of Owner-Contractor Agreement when there are no Bids date specified in product Sections.

B. Should specified reference standards conflict with Contract Documents, request clarification from Engineer before proceeding.

C. The contractual relationship of the parties to the Contract shall not be altered from the Contract Documents by mention or inference otherwise in any reference document.

### 1.4 MANUFACTURERS' FIELD SERVICES, FIELD TESTS AND REPORTS

A. When specified in individual specification Sections, Contractor shall require material or Product suppliers, Subcontractors, or manufacturers to provide qualified staff personnel to observe site conditions; testing; conditions of installation; quality of workmanship; start-up of equipment; testing, adjusting and balancing of equipment and materials; and troubleshooting as applicable – and to initiate instructions when necessary. Submit report per paragraph C below, this section.

B. Report observations and site decisions or instructions given to Owner, applicators or installers that are supplemental or contrary to manufacturers' written instructions.

C. Submit written report in duplicate within 10 days of observation, start-up, testing, etc. to Engineer for review.

## PART 2 - PRODUCTS

Not Applicable

**PART 3 - EXECUTION**

Not Applicable

END OF SECTION

P:\13 PROJECTS\P13-0334-00MCHENRY\04 DESIGN\11 SPECS\CONSTRUCTION SPECS\01 4000-QUALITY CONTROL SERVICES.DOCX

# SECTION 01 6000
# MATERIAL AND EQUIPMENT

## PART 1 - GENERAL

### 1.1 SECTION INCLUDES

A. Products

B. Transportation and handling

C. Storage and protection

D. Product options

E. Substitutions

### 1.2 PRODUCTS

A. Products: Means new material, machinery, components, equipment, fixtures and systems forming the Work. Does not include machinery and equipment used for preparation, fabrication, conveying and erection of the Work. Products may also include existing materials or components required for reuse.

B. Do not use materials and equipment removed from existing premises, except as specifically permitted by the Contract Documents.

C. Provide interchangeable components of the same manufacturer for similar components.

### 1.3 TRANSPORTATION AND HANDLING

A. Transport and handle products in accordance with manufacturer's instructions.

B. Promptly inspect shipments to assure that products comply with requirements, quantities are correct and products are undamaged.

C. Provide equipment and personnel to handle products by methods to prevent soiling, disfigurement or damage.

### 1.4 STORAGE AND PROTECTION

A. Store and protect products in accordance with manufacturer's instructions, with seals and labels intact and legible. Store sensitive products in weather-tight, climate-controlled enclosures.

B. For exterior storage of fabricated products, place on sloped supports above ground.

C. Provide off-site storage and protection when site does not permit on-site storage or protection.

D. Cover products subject to deterioration with impervious sheet covering. Provide ventilation to avoid condensation.

E. Store loose granular materials on solid flat surfaces in a well-drained area. Prevent mixing with foreign matter.

F. Provide equipment and personnel to store products by methods to prevent soiling, disfigurement or damage.

G. Arrange storage of products to permit access for inspection. Periodically inspect to assure products are undamaged and are maintained under specified conditions.

## 1.5 PRODUCT OPTIONS

A. Products Specified by Reference Standards or by Description Only: Any product meeting those standards or description.

B. Products Specified by Naming One or More Manufacturers: Products of manufacturers named and meeting specifications; no options or substitutions allowed.

C. Product Specified by Naming One Manufacturer as a Base and Naming Others as Acceptable: Obligations listed in paragraphs in 1.7.D. below apply when an "Acceptable Other" is used. Manufacturer named on the drawings and in equipment scheduling are to be considered as a Base; with respect to the particular product described, other manufacturers named in those documents are acceptable others.

D. When an "Acceptable Other" manufacturer is used in lieu of Specified, Contractor shall coordinate mechanical, plumbing and electrical requirements and will bear any additional costs required by other subcontractors as a result of the proposed product.

## 1.6 SUBSTITUTIONS

A. Refer to General Conditions.

B. Substitutions may be considered when a product becomes unavailable through no fault of the Contractor.

C. Document each request with complete data substantiating compliance of proposed Substitution with Contract Documents.

D. A request constitutes a representation that the Bidder:

1. Has investigated proposed product and determined that it meets or exceeds the quality level of the specified product.
2. Will provide the same warranty for the Substitution as for the specified product.
3. Will coordinate installation and make changes to other Work which may be required for the Work to be complete with no additional cost to Owner.
4. Has investigated that the proposed product can be installed in the space available with access for servicing and maintenance.
5. Has coordinated mechanical, plumbing and electrical requirements and will bear any additional costs required by other subcontractors as a result of the proposed product.
6. Waives claims for additional costs or time extension which may subsequently become apparent.
7. Will reimburse Owner for review or redesign services associated with re-approval by authorities.

E. Substitutions will not be considered when they are indicated or implied on shop drawing or product data submittals, or when acceptance will require revision to the Contract Documents.

F. Substitution Submittal Procedure:

1. Submit two copies of request for Substitution for consideration. Limit each request to one proposed Substitution.
2. Submit shop drawings, product data and certified test results attesting to the proposed product equivalence.
3. The Engineer will notify Contractor, in writing, of decision to accept or reject request.

**PART 2 - PRODUCTS**

Not Applicable

**PART 3 - EXECUTION**

Not Applicable

END OF SECTION

P:\13 PROJECTS\P13-0334-00MCHENRY\04 DESIGN\11 SPECS\CONSTRUCTION SPECS\01 6000-MATERIAL AND EQUIPMENT.DOCX

**SECTION 01 7700**
**PROJECT CLOSEOUT**

## PART 1 - GENERAL

### 1.1 SECTION INCLUDES

A. Closeout procedures

B. Final cleaning

C. Adjusting

D. Project record documents

E. Operation and maintenance data

F. Warranties

G. Spare parts and maintenance materials

### 1.2 CLOSEOUT PROCEDURES

A. Submit written certification that Contract Documents have been reviewed, Work has been inspected and that Work is complete in accordance with Contract Documents and ready for inspection by Engineer.

B. Provide submittals to Engineer that are required by governing or other authorities.

C. Submit final Application for Payment identifying total adjusted Contract Sum, previous payments, and sum remaining due.

D. Owner will occupy all portions of the building.

### 1.3 FINAL CLEANING

A. Execute final cleaning prior to final inspection.

B. Clean equipment and fixtures to a sanitary condition.

C. Replace strainers and replace filters of operating equipment affected by new installation.

D. Clean debris from roofs, gutters, downspouts, and drainage systems.

E. Clean site; sweep paved areas, rake clean landscaped surfaces affected by installation.

F. Remove waste and surplus materials, rubbish and any construction facilities and equipment from the site.

### 1.4 ADJUSTING

A. Adjust operating Products and equipment to ensure smooth and unhindered operation.

### 1.5 PROJECT RECORD DOCUMENTS

A. Maintain on site, one set of the following record documents; record actual revisions to the Work:

1. Contract Drawings
2. Specifications
3. Addenda
4. Change Orders and other Modifications to the Contract
5. Reviewed shop drawings, product data, and samples

B. Store Record Documents separate from documents used for construction.

C. Record information concurrent with construction progress.

D. Specifications: Legibly mark and record at each Product section description of actual Products installed, including the following:

1. Manufacturer's name and product model and number
2. Product substitutions or alternates utilized
3. Changes made by Addenda and Modifications

E. Record Documents and Shop Drawings: Legibly mark each item to record actual construction including:

1. Measured depths of foundations in relation to finish [first] [main] floor datum
2. Measured horizontal and vertical locations of underground utilities and appurtenances, referenced to permanent surface improvements
3. Measured locations of internal utilities and appurtenances concealed in construction, referenced to visible and accessible features of the Work
4. Field changes of dimension and detail
5. Details not on original Contract Drawings

F. Submit changes to Record Documents in AutoCAD format and pdf format.

G. Delete Engineer title block and seal from all documents.

H. Submit documents to Engineer with claim for final Application for Payment.

**1.6 OPERATION AND MAINTENANCE DATA**

A. Quality Assurance

1. Instructions and data are to be prepared by personnel experienced in maintenance and operation of described products.

B. Binders: Commercial quality, 3-D side ring binders with hardback, cleanable, plastic covers. When multiple binders are used, correlate data into related consistent groupings.

C. Prepare binder covers with printed title "OPERATION AND MAINTENANCE INSTRUCTIONS" and title of project. Include subject matter of binder when multiple binders are required.

D. Internally subdivide the binder contents with permanent page dividers, logically organized as described below with tab titling clearly printed under reinforced laminated plastic tabs.

E. Contents: Prepare a printed Table of Contents for each volume, with each Product or System description identified.

F. Part 1: Directory listing names, addresses, and telephone numbers of Engineer, Contractor, Subcontractors and major equipment suppliers.

G. Part 2: Operation and maintenance instructions, arranged by system and subdivided by component. For each category, identify names, addresses, and telephone numbers of Subcontractors and suppliers. Identify the following:

1. Significant design criteria.
2. List of equipment.
3. Parts list for each component.
4. Operating instructions.
5. Maintenance instructions for equipment and systems.
6. Maintenance instructions for special finishes, including recommended cleaning methods and materials and special precautions identifying detrimental agents.

H. Part 3: Project documents and certificates, including the following:

1. Shop drawings and product data.
2. Air and water balance reports.
3. Certificates.
4. Photocopies of warranties.

I. Submit one copy of completed volumes in final form 15 days prior to final inspection. This copy will be returned after final inspection with Engineer comments. Revise content of documents as required prior to final submittal.

J. Submit final volumes revised within ten days after final inspection.

**1.7 WARRANTIES**

A. Execute and assemble documents from Subcontractors, suppliers and manufacturers.

B. Provide Table of Contents and assemble in 3-D side ring binder with durable cover.

C. Submit prior to final Application for Payment.

D. For items of Work delayed beyond date of Substantial Completion, provide updated submittal within ten days after acceptance, listing date of acceptance as start of warranty period.

**1.8 SPARE PARTS AND MAINTENANCE MATERIALS**

A. Provide products, spare parts, maintenance and extra materials in quantities specified in individual specification Sections.

B. Deliver to Project site and place in location as directed; obtain receipt from Owner prior to final payment.

**PART 2 - PRODUCTS**

Not Applicable

**PART 3 - EXECUTION**

Not Applicable

END OF SECTION

P:\13 PROJECTS\P13-0334-00MCHENRY\04 DESIGN\11 SPECS\CONSTRUCTION SPECS\01 7700-PROJECT CLOSEOUT.DOCX

# SECTION 20 0500
# BASIC REQUIREMENTS FOR MECHANICAL, PLUMBING, AND FIRE SUPPRESSION

## PART 1 - GENERAL

### 1.1 SECTION INCLUDES

A. Basic mechanical requirements specifically applicable to Divisions 20 and 23.

### 1.2 SCOPE OF WORK

A. The following description is a general description of the HVAC this project. This work description is not all inclusive but is offered to give the Contractor a general idea of the scope of the project.

1. HVAC work includes but is not limited to the following:
   a. Installation of two prepurchased air-cooled scroll chillers
   b. New chilled water piping
   c. New variable frequency drives for chilled water pumps
   d. New premium efficiency motors for chilled water pumps
   e. Temperature controls modifications for new equipment

### 1.3 DEFINITIONS

A. The following words or phrases have special meaning when used in the articles of this division and in any other requirements applicable to this division:

1. "Exposed to View" or "Exposed" — shall have reference to and mean that the pipes, ducts, etc., insulated or otherwise, in the completed structure are visible within any normally occupied space, room or area.
2. "In Concealed Spaces", "Concealed or "Not Exposed to View" — shall have reference to and mean that the pipes, duct, etc., insulated or otherwise are concealed and not exposed to view within furred spaces, above suspended ceilings, pipe chases, etc.
3. "Unfinished Spaces" or "Unfinished Rooms" — shall have reference to areas such as Machine Rooms, Equipment Rooms, or similar areas. Where the words "In Finished Areas" or "Finished Rooms" are used, it shall have reference to rooms or spaces, such as, Reading rooms, Offices, Public Corridors, etc.
4. "Finished Rooms or Spaces" shall refer to areas similar to offices, public corridors, and public toilet rooms.
5. "Provide" — shall be taken to mean "furnish and install" meaning to purchase and deliver to the job site and the installation thereof.
6. "Piping" — shall include, in addition to pipe all fittings, valves, hangers, and other supports, expansion compensators, anchors, and accessories related to such piping including associated insulation.
7. "Ductwork" — shall include, in addition to ducts, all fittings, transitions, dampers, hangers and other supports, fire dampers, access panels, associated insulation and accessories related to such ductwork.
8. "Contractor" in Specifications and Drawing refers to respective Contractor performing that portion of work.
9. "Invert Elevation" (I.E.) means elevation of inside bottom of pipe or duct.
10. "Mechanical Work" is work in Divisions 20, 21, 22, and 23.

NOTE: The words "Contractor shall" are implied and shall be so understood wherever the directions "furnish," "install" or "provide" are used.

**1.4 SPECIAL CONDITIONS**

A. Minor items and accessories or devices reasonably inferable as necessary to the complete and proper operation of any system shall be provided by the Contractor for such system whether or not they are specifically called for by the Specifications or Drawings.

B. Where work specified in other sections of the specifications connects to equipment specified in Divisions 20 and 23 Sections, check the required connection to such equipment.

**1.5 WORK BY OWNER**

A. The following work shall be by the Owner:

Not applicable

**1.6 OWNER-FURNISHED PRODUCTS**

A. The following products shall be furnished by the Owner and installed by the Contractor:

1. Air-cooled scroll chillers

**1.7 PROJECT/SITE CONDITIONS**

A. Install Work in locations shown on Drawings, unless prevented by Project conditions.

B. Prepare drawings showing proposed rearrangement of Work to meet Project conditions, including changes to Work specified in other Sections. Obtain permission of Owner before proceeding.

**1.8 CONTRACTOR USE OF PREMISES**

A. Refer to Division 01 and General Conditions.

B. Limit use of site and premises to allow:

1. Owner occupancy.
2. Use of premises by Owner to conduct normal activities.
   a. Tie-ins to existing systems must be done in manner so as not to interfere with Owner's operations. All shut downs of existing services require a three day notice minimum in writing.

C. Schedule the Work to accommodate this requirement.

D. Cooperate with Owner to minimize conflict and to facilitate Owner's operations.

E. The Owner will be responsible for the identification and abatement of all hazardous materials and asbestos associated with the project. Although great care will be taken to eliminate any risks, the Contractor must be aware that hazardous materials may exist on site. Therefore, the Contractor shall immediately suspend work and notify the Owner if asbestos or other hazardous material is suspected in the work area of the project.

**1.9 PROJECT SCHEDULE**

A. Expected ship date for the chillers is late February, 2014.

B. Project shall be of substantial completion including startup and availability of the chillers for cooling no later than March 28th, 2014.

## 1.10 REFERENCE STANDARDS

A. Quality Assurance

1. For products or workmanship specified by association, trade, or Federal Standards, comply with requirements of the standard, except when more rigid requirements are specified or are required by applicable codes.
2. Conform to reference standard by date of issue current on date of Contract Documents date for receiving bids date of Owner-Contractor Agreement when there are no Bid dates specified.
3. Obtain copies of standards when required by Contract Documents.
4. Maintain copy of applicable standard at job site during submittals, planning and progress of the specific work, until Substantial Completion.
5. Should specified reference standards conflict with Contract Documents, request clarification from Architect before proceeding.
6. The contractual relationship of the parties to the Contract shall not be altered from the Contract Documents by mention or inference otherwise in any reference document.

B. Reference Standards and Specification Abbreviations

1. Refer to Divisions 01, 20, 21, 22, and 23.

## 1.11 SUBMITTALS

A. Shop drawings and samples shall be submitted in compliance with the Conditions of the Contract and General Requirements.

B. Submittals shall contain outline dimensions, operating and maintenance clearances and sufficient engineering data to indicate compliance with the specifications. Each submittal shall be clearly labeled as indicated in the Conditions of the Contract and General Requirements.

C. Each piece of equipment shall be identified by the number shown in the schedules and by specification article number pertaining to the item. Shop drawings shall as a minimum be ¼" equals 1'-0" scale, and shall be newly prepared by the Contractor and not reproduced from the Architect's drawings. Layouts shall be made for all floor plans including all ductwork, piping, electrical distribution and other mechanical equipment. Layouts shall show clearances of piping, ducts, etc., above floor.

D. Contractor shall obtain Engineer's approval on all the work before any equipment is purchased, or any work installed. Contractor shall also secure approval of the Governmental Authorities having jurisdiction on all equipment and on the layout of the complete system.

E. The Engineer's review and approval of shop drawings is a gratuitous assistance and in no way does it relieve the Contractor from responsibility for errors or omissions which may exist on the shop drawings. Where such errors or omissions are discovered later, they must be made good by the Contractor, without any additional cost to the Owner, irrespective of any approval by the Engineer.

1. The Contractor shall incorporate with his shop drawings, a letter indicating all deviations from the plans and/or specifications. If in the opinion of the Architect, the deviations are not equal, the Contractor will be required to furnish the item as specified and as indicated on the drawings.

2. Record documents shall be submitted in compliance with the requirements of the Specifications.

**1.12 QUALITY CONTROL**

A. Monitor quality control over suppliers, manufacturers, products, services, site conditions and workmanship to product Work of specified quality.

B. Comply fully with manufacturers' instructions, including each step in sequence.

C. Should manufacturers' instructions conflict with Contract Documents, request clarification from Architect before proceeding.

D. Comply with specified standards as a minimum quality for the Work except when more stringent tolerances, codes or specified requirements indicate higher standards or more precise workmanship.

E. Work to be performed by persons qualified to produce workmanship of specified quality.

F. Secure products in place with positive anchorage devices designed and sized to withstand stresses, vibration, physical distortion or disfigurement.

G. Manufacturers' Field Services and Reports

1. When specified in individual specification sections, require material or product suppliers or manufacturers to provide qualified staff personnel to observe site conditions, conditions of installation, quality or workmanship, start-up of equipment, testing, adjusting and balancing of equipment and troubleshooting as applicable and to initiate instructions when necessary.
2. Report observations and site decisions or instructions given to applicators or installers that are supplemental or contrary to manufacturers' written instructions.
3. Submit report in duplicate within ten (10) days of observation to Architect for review.

**1.13 CONTRACT CLOSEOUT**

A. Final Cleaning

1. Refer to Division 01.
2. Execute final cleaning prior to final inspection.

B. Adjusting

1. Adjust operating products and equipment to ensure smooth and unhindered operation.

C. Project Record Documents

1. Refer to Division 01.
2. Record Documents and Shop Drawings: Legibly mark each item to record actual construction including:

   a. Field changes of dimension and detail.
   b. Details not on original Contract Drawings.

3. Delete Architect's title block and seal from all documents.
4. Submit documents to Architect with claim for final application for payment.

## 1.14 SPARE PARTS AND MAINTENANCE DATA

A. Provide products, spare parts, maintenance and materials in quantities specified in individual specification sections.

B. Deliver to project site and place in location as directed; obtain receipt prior to final payment.

## 1.15 WARRANTIES

A. Provide notarized copies.

B. Execute and assemble documents from Subcontractors, suppliers and manufacturers.

C. Provide table of contents and assemble in 3-D side ring binder with durable cover.

D. Submit prior to final application for payment.

E. For items of Work delayed beyond date of Substantial Completion, provide updated submittal within ten days after acceptance, listing date of acceptance as start of warranty period.

## 1.16 REGULATORY REQUIREMENTS

A. Conform to 2006 International Mechanical Code with Amendments, State of Illinois Plumbing Code with Amendments and NFPA 13, latest editions.

B. Obtain permits and request inspections from McHenry County Planning and Development.

C. Conform to all other governing agencies and authorities.

# PART 2 - PRODUCTS

## 2.1 MATERIAL AND EQUIPMENT

A. Refer to Division 01.

B. Products

1. Products: Means new material, machinery, components, equipment, fixtures and systems forming Work. Does not include machinery and equipment used for preparation, fabrication, conveying and erection of Work. Products may also include existing materials or components required for reuse.
2. Do not use materials and equipment removed from existing premises, except as specifically permitted by Contract Documents.
3. Provide interchangeable components of same manufacturer for similar components.

C. Transportation and Handling

1. Transport and handle products in accordance with manufacturer's instructions.
2. Promptly inspect shipment to assure that products comply with requirements, quantities are correct and products are undamaged.

## 2.2 STORAGE AND PROTECTION

A. Refer to Division 01.

B. Store and protect products in accordance with manufacturer's instructions, with seals and labels intact and legible. Store sensitive products in weather-tight, climate-controlled enclosures.

C. For exterior storage of fabricated products, place on sloped supports above ground.

D. Provide off-site storage and protection when site does not permit on-site storage or protection.

E. Cover products subject to deterioration with impervious sheet covering. Provide ventilation to avoid condensation.

F. Store loose granular materials on solid flat surfaces in a well-drained area. Provide mixing with foreign matter.

G. Provide equipment and personnel to store products by methods to prevent soiling, disfigurement or damage.

H. Arrange storage of products to permit access for inspection. Periodically inspect to assure products are undamaged and are maintained under specified conditions.

**2.3 PRODUCT OPTIONS**

A. Refer to Division 01.

B. Products Specified by Reference Standards or by Description only: Any product meeting those standards or description.

C. Products Specified by Naming One or More Manufacturers: Products of manufacturers named and meeting specifications; no options or substitutions allowed.

1. Documents have been prepared utilizing a single manufacturer as the basis of design. Contractor shall be responsible for coordinating any varying requirements (e.g. space requirements, electrical requirement) when utilizing the other acceptable manufacturers.

**PART 3 - EXECUTION**

**3.1 SCOPE**

A. Work included under Divisions 20, 21, 22, and 23 shall include all labor, services, materials, and equipment and performance of all work required for installation of mechanical, plumbing, and fire suppression systems as shown on Drawings and as herein specified in following sections.

**3.2 INTERPRETATION OF CONTRACT DOCUMENTS**

A. Should there be discrepancy or a question of intent, refer matter to Engineer for decision before ordering any equipment or materials or before starting any related work.

B. Drawings and Specifications are to be taken together. Work specified and not shown or work shown and not specified shall be performed or furnished as though mentioned in both Specifications and Drawings. If there is discrepancy between Drawings and Specifications as to quantity or quality to be provided, the greater quantity or better quality shall be provided.

C. Minor items and accessories or devices reasonably inferable as necessary to complete and proper installation and operation of any system shall be provided by Contractor for such system whether or not specifically called for by Specifications or Drawings.

D. Engineer may change location of any equipment 5′ and any piping, ductwork, conduit, etc. 10′ in any direction without extra charge, provided such changes are made before installation.

E. Locations of items not definitely fixed by dimensions are approximate only and exact locations necessary to secure the best conditions and results shall be determined at the site and shall be subject to review and approval by Architect.

F. Follow drawings in laying out work, check drawings of other trades to verify spaces in which work will be installed, and maintain maximum headroom and space conditions at all points.

1. Where headroom or space conditions appear inadequate, notify Architect or Owner's field representative before proceeding with installation.
2. Duct and pipe rerouting and duct size changes shall be made at no additional cost to the Owner.

G. Furnish advance information on locations and sizes of frames, boxes, sleeves and openings needed for the work, and also furnish information and shop drawings necessary to permit installation of other work without delay.

H. Where there is evidence that parts of the Work specified in Divisions 20 and 23 will interfere with other work, assist in working out space conditions to make satisfactory adjustments, revise and submit coordinated shop drawings.

I. After review and without additional cost to the Owner, make minor modifications in the work as required by structural interferences, by interferences with work of other sections or for proper execution of the work.

J. Work installed before coordinating with other work so as to cause interference with other work shall be changed and corrected without additional cost to the Owner.

K. Drawings are diagrammatic in nature and are a graphic representation of requirements and shall be followed as closely as actual building construction will permit. All changes from the plans necessary to make the work conform to the building as constructed and to fit the work of other trades or to conform to rules of the Governmental Authorities having jurisdiction, NFPA, OSHA and the Owner's Insurance Underwriters, shall be made by the Contractor without extra cost to the Owner.

L. The layout of the piping, ductwork, equipment, etc., as shown on the drawings shall be checked and exact locations shall be determined by the dimensions of the equipment approved and the Contractor shall obtain approval for the revised layout before the apparatus is installed. The Contractor shall field measure or consult existing record Architectural and Structural Drawings if available for all dimensions, locations of partitions, locations and sizes of structural supports, foundations, etc.

M. Omission in the Drawings and/or Specifications of any items necessary for the proper completion or operation of the work outlined in this specification shall not relieve the Contractor from furnishing same without additional cost to the Owner.

N. The Equipment Shop Drawings will be furnished to the Contractor before roughing-in. Contractor shall not install any piping or ductwork for said equipment until he has received approved shop drawings for same.

**3.3 PROJECT/SITE CONDITIONS**

A. Each Contractor shall visit the site prior to bid submission to determine all existing conditions that may affect his work and shall make appropriate allowances for such conditions in his bid. Failure to visit the site shall not be cause for a request for additional compensation later in the project during construction.

B. Install Work in locations shown on Drawings, unless prevented by Project conditions.

C. Prepare drawings showing proposed rearrangement of Work to meet Project conditions, including changes to Work specified in other Sections. Obtain permission of Owner before proceeding.

**3.4 ALTERATIONS IN PRESENT BUILDING AND SYSTEMS**

A. Contractor shall take particular note of the revisions and alterations to the existing systems, facilities and equipment due to the new construction as indicated on the Drawings and/or in Specification. Contractor shall remove, reroute or alter all services, ductwork, etc., as required or as indicated on the drawings.

1. The Contractor shall maintain all services in the existing building. In case, where new service connections are to be made to existing services and service interruptions can in no way be avoided, the service interruptions shall be with the minimum of inconvenience to the Owner and the work shall be done at such time of any day, Saturday and Sunday included, and only as directed by the Owner or the Architect.

**3.5 ERECTION & WORKMANSHIP**

A. Contractor is to be responsible for all work fitting into place in satisfactory, neat and workmanlike manner in every particular, to approval of Engineer.

B. Unless explicitly stated to contrary, each Contractor shall furnish and install each item of equipment or material hereinafter specified, complete with all necessary fittings, supports, trim, piping, insulation, etc., as required for complete and operating installation.

C. Equipment and materials shall be installed according to manufacturer's instruction unless otherwise specifically directed by Contract Documents.

D. Contractor shall provide all necessary OSHA approved rigging, scaffolding, tools, tackle, labor, etc., necessary for the complete installation of the equipment.

E. Contractor shall adapt his work to job conditions and make such changes as required and permitted by the Architect such as moving his work to clear beams, joints, light fixtures, etc., adjusting risers, etc. avoiding interferences with windows and openings, etc. raising or lowering his work to permit the passing of ductwork or the work of other trades, etc., all as required or as job conditions dictate, without any additional costs to the Owner.

F. All appliances and equipment shall be installed and connected with best engineering practices and in accordance with the manufacturer's best instructions and recommendations.

G. Work done by Contractor at the site in the execution of this Project shall be performed only by skilled mechanics, recognized as such in their respective trades in the direct employ either of the Contractor proper or of affiliate firms which have a longstanding and continuing formal agreement with the Contractor for providing the rendered services on similar work of this type.

**3.6 PROTECTION FROM INJURY**

A. All pipes, fixtures, traps, equipment, and other parts of the Work shall be protected against injury by freezing or exposure to the weather during construction while stored or installed in place.

## 3.7 MECHANICAL AND ELECTRICAL WORK COORDINATION

A. Refer to Division 01.

B. Provide coordination for type of mechanical and electrical work required for this project for duration of work.

C. Submittals

1. Coordinate mechanical and electrical work of Divisions 20, 23, and 26 with work of each other and of other Divisions.
2. Coordinate progress schedules, including dates for submittals and for delivery of products.
3. Coordinate location and verify size of pipes, equipment, fixtures, conduit, ducts, openings, switches, outlets, fire sprinkler heads, fire hose cabinets, etc., in progress of the Work. Architectural Drawings shall take precedence over Mechanical and Electrical Drawings.
4. Participate in progress meetings. Report on progress of work to be adjusted under coordination requirements and any required changes in schedules. Transmit minutes of meetings and reports to concerned parties.

D. Coordination of Submittals

1. Review shop drawings, product data, and sample for compliance with Contract Documents and for coordination among work of all sections of Project Manual. Transmit to Architect.
2. Check field dimensions and clearances and relationship to available space and anchors.
3. Check compatibility with equipment and work of other sections, electrical characteristics and operational control requirements.
4. Check motor voltages and control characteristics.
5. Coordinate controls, interlocks, wiring of pneumatic switches and relays.
6. Coordinate wiring and control diagrams.
7. Review effect of any changes on work of other sections.
8. Verify and coordinate maintenance of Record Documents.

E. Coordination of Substitutions and Modifications

1. Review proposals and requests from subcontractors.
2. Verify compliance with Contract Documents and for compatibility with work and products of other sections.
3. Submit to Architect with recommendation for action.

F. Observation of Work

1. Observe work for compliance with Contract Documents.
2. Maintain list of observed deficiencies and defects; promptly submit to Architect.

G. Documentation

1. Observe and maintain a record of tests. Record:

   a. Specification section number, product, and name of subcontractor
   b. Name of testing agency and name of inspector
   c. Name of manufacturer's representative present
   d. Date, time, and duration of tests

e. Type of test, and results
f. Retesting required

2. Assemble background documentation for dispute and claim settlement by Architect.
3. Submit copies of documentation to Architect upon request.

H. Equipment Start-Up

1. Verify utilities, connections and controls are complete and equipment is in operable condition.
2. Observe start-up and adjustments; record time and date of start-up and results.
3. Observe equipment demonstrations to Owner; record times and additional information required for Operation and Maintenance Manuals.

I. Inspection and Acceptance of Equipment

1. Prior to inspection, verify that equipment is tested and operational, and clean.
2. Assist Architect with inspection. Prepare list of items to be completed and corrected.

**3.8 CUTTING AND PATCHING**

A. Refer to Division 01.

B. Submit written request in advance of cutting or alteration which affects:

1. Structural integrity of any element of Project
2. Integrity of weather-exposed or moisture-resistant element
3. Efficiency, maintenance, or safety of any operational element
4. Visual qualities of sight-exposed elements
5. Work of Owner or separate contractor

C. Include in request:

1. Effect on work of Owner or separate contractor
2. Written permission of affected separate contractor
3. All items requested in Division 01

D. Examination

1. Inspect existing conditions prior to commencing Work, including elements subject to damage or movement during cutting and patching.
2. After uncovering existing work, inspect conditions affecting performance of work.
3. Beginning of cutting or patching means acceptance of existing conditions.

E. Preparation

1. Provide temporary supports to ensure structural integrity of the Work. Provide devices and methods to protect other portions of Project from damage.
2. Provide protection from elements for areas which may be exposed by uncovering work.
3. Maintain excavations free of water.

F. Cutting and Patching

1. Execute cutting, fitting, and patching including excavation and fill to complete work.
2. Fit products together to integrate with other work.

3. Uncover work to install ill-timed work.
4. Remove and replace defective or non-conforming work.
5. Remove samples of installed work for testing when requested.
6. Provide openings in work for penetration of mechanical and electrical work.

G. Performance

1. Execute work by methods to avoid damage to other Work, and which will provide appropriate surfaces to receive patching and finishing.
2. Employ original installer to perform cutting and patching for weather-exposed and moisture-resistant elements, and sight-exposed surfaces.
3. Cut rigid materials using masonry saw or core drill. Pneumatic tools not allowed without prior approval.
4. Restore work with new products in accordance with requirements of Contract Documents.
5. Fit work air tight to pipes, sleeves, ducts, conduit, and other penetrations through surfaces.
6. At penetrations of fire-rated walls, partitions, ceiling, or floor construction, completely seal voids with fire-rated fire resistant material to full thickness of the penetrated element.
7. Refinish surfaces to match adjacent finish. For continuous surfaces, refinish to nearest intersection or natural break. For an assembly, refinish entire unit.

**3.9 ACCESS PANELS**

A. Where control valves, shut-off valves, drip traps, heating coils, dampers, pull boxes or other specialties, which require service or adjustment, are installed above inaccessible type furred ceilings or within furred walls, Contractor whose equipment is involved shall furnish and install access panels as required.

B. Access panels shall be of sufficient size to make possible servicing, adjustment, removal and replacement of concealed equipment through opening provided. Panels shall be sized as shown on drawings, or if sizes are not shown, shall be minimum of 16″ x 24″ in walls and 24″ x 24″ in ceilings.

C. Contractor shall confer with other trades with respect to access panel locations, and shall wherever practical group valves, traps, dampers, etc. in such way as to be accessible from single panel and eliminate as many access panels as possible.

D. Submit shop drawings for review before ordering panels. Where fire rating is required, furnish label doors compatible with fire rating of assembly.

**3.10 SOUND CONTROL**

A. Mechanical penetrations into shall be maintained airtight to prevent sound transfer.

B. Conduits shall be grouted or sealed tightly in place.

C. Piping, ductwork, etc. shall pass through sleeves. Pack sleeves tight with glass fiber or oakum and caulked on both sides with non-hardening acoustical sealant.

**3.11 FIRE RATED PENETRATIONS**

A. Sleeves for pipes and ducts through fire rated and fire resistive floors and walls shall be constructed of materials classified by UL to provide fire stopping equal to time rating of construction being penetrated. Use asbestos free materials that comply with applicable

codes and have been tested under positive pressure in accordance with UL 1479 or ASTM E 814.

B. Install penetration seal materials in accordance with printed instructions of the UL Fire Resistance Directory and in accordance with manufacturer's instruction.

C. Seal holes or voids made be penetrations to ensure an effective smoke barrier.

D. Where floor openings without penetrating items are more than 4" in width and subject to traffic or loading, install fire stopping materials capable of supporting same loading as floor.

E. Protect materials from damage on surfaces subject to traffic.

F. Examine penetration sealed areas to ensure proper installation before concealing or enclosing areas.

G. Keep areas of work accessible until inspection by applicable code authorities.

H. Perform under this section patching and repairing of fire stopping caused by cutting or penetration by other trades.

I. Clean up spills of liquid components.

J. Neatly cut and trim materials as required.

K. Remove equipment, materials and debris, leaving area in undamaged, clean condition.

**3.12 PROTECTION OF ELECTRICAL EQUIPMENT**

A. Contractor shall furnish and install sheet metal drain pans beneath piping that is routed above electrical equipment and/or above the 3' access space in front of such equipment. Electrical equipment, for the purpose of addressing drain pan requirements, shall be defined as free-standing or wall-mounted switchgear, transformers, distribution boards or motor control centers. Piping includes, but is not limited to, plumbing, fire suppression, mains (not branch piping with sprinkler heads), hydronic heating or cooling, steam and condensate, and fuel systems.

1. Drain pans shall be 20 gauge galvanized sheet metal with a minimum 4" high turned up edge. Bottom of drain pan shall slope to a single drainage point at ⅛" per foot. A 1" diameter clear plastic tube shall allow collected fluid to drain to the nearest open site floor drain. Secure plastic tubing to building structure only.
2. Drain pan shall be hung from building structure with angle iron trapeze hangers (no hanger shall penetrate the drain pan). Consider drain pan to be full of water for hanger load calculations.
3. Drain pans shall include liquid detectors with alarms only if noted on the drawings.

B. Provide sprinkler heads beneath drain pan only as required by NFPA.

C. Contractor shall include provisions to adjust the local lighting layout, at no extra cost to Owner, in order to accommodate any detrimental effect the drain pan has on the illumination of the electrical equipment and access space.

**3.13 STARTING SYSTEMS**

A. Coordinate schedule for start-up of various equipment and systems.

B. Notify Architect and Owner seven days prior to start-up of each item.

C. Verify that each piece of equipment or system has been checked for proper lubrication, drive rotation, belt tension, control sequence or other conditions which may cause damage.

D. Verify that tests, meter readings and specified electrical characteristics agree with those required by the equipment or system manufacturer.

E. Verify wiring and support components for equipment are complete and tested.

F. Execute start-up under supervision of responsible manufacturer's representative or Contractors' personnel in accordance with manufacturers' instructions.

G. When specified in individual specification sections, require manufacturer to provide authorized representative to be present at site to inspect, check and approve equipment or system installation prior to start-up and to supervise placing equipment or system in operation.

H. Submit a written report in accordance with paragraph 1.12 previously specified that equipment or system has been properly installed and is functioning correctly.

**3.14 TESTING, ADJUSTING AND BALANCING**

A. Contractor shall appoint, employ and pay for services of independent firm to perform testing, adjusting and balancing.

B. Independent firm will perform services specified in Division 01 and Division 23 Section 23 0593, "Testing, Adjusting, and Balancing for HVAC."

C. Reports will be submitted by independent firm to Architect indicating observations and results of tests and indicating compliance or non-compliance with specified requirements and with requirements of Contract Documents.

**3.15 REMODELING PROJECT PROCEDURES**

A. Refer to Division 01.

B. Demolition

1. Contractor shall remove existing equipment and materials pertaining to his contract as specified or as required, whether shown on Drawings or not, to prepare for new work of all contracts.
2. Where necessary, reroute piping, ducts, conduits, wiring, etc. from within walls, floors, ceilings, etc. being removed. Contractor involved with interrupted service shall be responsible for accomplishing required work whether shown on Drawings or not.
3. Cap all abandoned or terminated piping, conduit, etc. below floor, behind wall surface, above ceiling, etc. as required to be completely concealed after new work is complete.
4. In general, mechanical remodeling work is shown on Mechanical Drawings but carefully study all drawings for all contracts for "demolition" and "remodeling" work in existing building and field check to verify locations where such work is being done to determine exact extent of work required. No extra will be allowed for additional work required because of demolition or remodeling whether or not work is specifically noted, itemized or shown on Drawings.
5. Contractor shall cap or plug all pipes, valves, fittings, etc. left open after demolition if they are not to be reused.

## 3.16 CLEANING, FLUSHING, INSPECTING

A. General: Clean exterior surfaces of installed piping systems of superfluous materials and prepare for application of specified coatings (if any). Flush out piping systems with clean water before proceeding with required tests. Inspect each run of each system for completion of joints, supports and accessory items.

B. Sufficient flushing water shall be introduced into the mains to produce a velocity of not less than 4' per second and this flow rate shall be continued until the discharge is clean and clear and does not show evidences of silt or foreign matter when a sample is visually inspected.

C. Inspect pressure piping in accordance with procedures of ASME B31.

## 3.17 PIPING TESTS

A. Test pressure piping in accordance with ASME B31.

B. General: Provide temporary equipment for testing, including pump and gauges. Test piping systems before insulation is installed wherever feasible and remove control devices before testing. Test each natural section of each piping system independently, but do not use piping system valves to isolate sections where test pressure exceeds valve pressure rating. Fill each section with water and pressurize for indicated pressure and time.

1. Test each piping system at 150% of operating pressure indicated, but not less than 25 psi test pressure.
2. Observe each test section for leakage at end of test period. Test fails if leakage is observed or if pressure drop exceeds 5% of test pressure.

C. Repair piping systems sections which fail required piping test, by disassembly and re-installation, using new materials to extent required to overcome leakage. Do not use chemicals, stop-leak compounds, mastics or other temporary repair methods.

D. Drain test water from piping systems after testing and repair work has been completed.

END OF SECTION

P:\13 PROJECTS\P13-0334-00MCHENRY\04 DESIGN\11 SPECS\CONSTRUCTION SPECS\20 0500-BASIC M-P-FP REQUIREMENTS.DOCX

# SECTION 20 0501
# MINOR MECHANICAL, PLUMBING, AND FIRE SUPPRESSION DEMOLITION

## PART 1 - GENERAL

### 1.1 SECTION INCLUDES

A. Minor demolition specifically applicable to Divisions 20 and 23.

## PART 2 - PRODUCTS

### 2.1 MATERIALS AND EQUIPMENT

A. Refer to General Conditions and Division 01.

B. Materials and equipment for patching and extending work: As specified in individual Sections.

## PART 3 - EXECUTION

### 3.1 EXAMINATION

A. Verify field measurements, equipment location, piping and ductwork sizes and arrangements as shown on Drawings.

B. Verify that abandoned piping, ductwork and equipment serve only abandoned facilities.

### 3.2 PREPARATION

A. Disconnect mechanical systems in walls, floors and ceilings scheduled for removal.

B. Coordinate utility service shut-downs with Utility Companies.

C. Provide temporary connections to maintain existing systems in service during construction.

D. Existing Mechanical Systems: Obtain permission from Owner at least 72 hours before partially or completely disabling any system.

### 3.3 DEMOLITION AND EXTENSION OF EXISTING SYSTEMS

A. Demolish and extend existing work under provisions of General Conditions, and Division 01.

B. In general, mechanical, plumbing, and electrical remodeling work is shown on Drawings but carefully study all drawings for all contracts for "demolition" and "remodeling" work in existing building and field check to verify locations where such work is being done to determine exact extent of work required. No extra will be allowed for additional work required because of demolition or remodeling whether or not work is specifically noted, itemized or shown on Drawings.

C. Remove existing equipment and materials pertaining to contract as specified or as required, whether shown on Drawings or not, to prepare for new work of all contracts.

D. Where necessary, reroute piping, ducts, etc. from within walls, floors, ceilings, etc. being removed. Contractor involved with interrupted service shall be responsible for accomplishing required work whether shown on Drawings or not.

E. Cap all abandoned or terminated piping, etc. below floor, behind wall surface, above ceiling, etc., as required to be completely concealed after new work is complete.

F. Cap or plug all pipes, valves, fittings, etc. left open after demolition if they are not to be reused.

G. Maintain access to existing mechanical installations which remain active. Modify installation or provide access panel as appropriate.

H. Extend existing installations using materials and methods compatible with existing mechanical installations, or as specified.

**3.4 DISPOSITION OF REMOVED EQUIPMENT**

A. Where existing materials or equipment are specified to be removed from service, respective Contractor shall take possession of same, coordinate with Owner where items are to be stored or remove unwanted items from site promptly, except as specified below or unless otherwise noted on Drawings.

B. All salvageable material and equipment, including but not necessarily limited to plumbing fixtures, heating units, air conditioning units, piping, valves, etc., shall be removed and maintained in as good condition as possible and turned over to Owner. However, if Owner decides any such materials are of no value to him, then they shall become property of Contractor who shall remove such discarded work from premises and dispose of same.

C. Existing equipment or systems, etc. which are specified to be replaced by new equipment, or system etc. shall not be removed from service until the new equipment, materials, systems, etc. have actually arrived at project site.

**3.5 INSTALLATION**

A. Install relocated materials and equipment under the provisions of Division 01.

**3.6 CLEANING AND REPAIR**

A. Refer to General Conditions and Division 01.

B. Clean and repair existing materials and equipment which remain or are to be reused.

END OF SECTION

P:\13 PROJECTS\P13-0334-00MCHENRY\04 DESIGN\11 SPECS\CONSTRUCTION SPECS\20 0501-MINOR M-P-FP DEMOLITION.DOCX

**SECTION 20 0513**
**MOTOR REQUIREMENTS FOR MECHANICAL, PLUMBING, AND FIRE SUPPRESSION EQUIPMENT**

## PART 1 - GENERAL

### 1.1 SCOPE OF WORK

A. Motor requirements specifically applicable to Divisions 20 and 23, including:

1. Three-phase general-purpose, horizontal, small and medium, squirrel-cage induction motors for use on ac power systems up to 600 volts.

B. Coordination

1. Coordinate features of motors, installed units, and accessory devices to be compatible with the following such that all items furnished constitute a properly related package:
   a. Motor starters
   b. Motor controllers
   c. Variable frequency drives
   d. Torque, speed and horsepower requirements of the load
   e. Ratings and characteristics of supply circuit and required control sequence
   f. Ambient and environmental conditions of installation location
2. Providing a motor to satisfy the efficiency requirements specified herein, is the responsibility of the Contractor. If any given manufacturer or supplier of the motorized equipment cannot provide a motor that satisfied the specified efficiency requirements, the Contractor is responsible for any and all steps necessary to provide an adequate motor including but not necessarily limited to:
   a. Coordinating delivery and installation of an acceptable motor to the motorized equipment supplier for factory-installation.
   b. Field-installation of an acceptable motor on the motorized equipment. Field installation shall not void the warranty of the motorized equipment.

### 1.2 DEFINITIONS

A. Factory-installed motor: A motor installed by the motorized equipment manufacturer at the equipment manufacturer's factory as a component of the equipment.

B. Field-installed motor: A motor installed on the motorized equipment at the Project site.

### 1.3 CODES AND STANDARDS (UTILIZE LATEST EDITION)

A. ASHRAE 90.1- Energy Standard for Buildings except Low-Rise Residential Buildings

B. AFBMA 9 - Load Ratings and Fatigue Life for Ball Bearings

C. ANSI/IEEE 112B - Test Procedure for Polyphase Induction Motors and Generators

D. EISA - The Energy Independence and Security Act of 2007

E. IECC - International Energy Conservation Code

F. IEEE 112-2004 - Standard Test Procedure for Polyphase Induction Motors and Generators

G. IEEE 841-2001 - Standard for Petroleum and Chemical Industry - Severe Duty Totally Enclosed Fan-Cooled (TEFC) Squirrel Cage Induction Motors - Up to and Including 370 kW (500 hp)

H. NETA ATS - Acceptance Testing Specification

I. NFPA 70 - National Electrical Code

J. NEMA MG 1- Motors and Generators

K. UL 1004 – Electric Motors

**1.4 QUALITY ASSURANCE**

A. Manufacturer shall be a company specializing in manufacture of electric motors for the intended use and their accessories, with minimum three years documented product development, testing and manufacturing experience.

B. All motors shall be UL 1004 listed.

C. Motor efficiencies shall be based on the IEEE 112, Test Method B.

**1.5 SUBMITTALS**

A. Product Data

1. Submit manufacturer's literature indicating:

a. Type and size of motor
b. Name plate data and rating
c. Weight
d. Conduit entry and ground lug locations
e. Enclosure type and mounting arrangement
f. Insulation class
g. Information on coating or finishes
h. Nominal minimum efficiency

(1) Provide statement that all motors 1 hp and larger meet "premium efficiency" requirements specified herein.

i. Nominal minimum power factor
j. Sound power levels in dba

2. Submit manufacturer's test results verifying guaranteed minimum efficiency and power factor for all three phase motors larger than 1 hp.
3. Submit manufacturer's installation instructions.
4. Submit manufacturer's literature for bearing protection grounding rings. If not integral to the motor supplied, but field installed as an option, also provide manufacturer's installation instructions.

B. Operating and Maintenance Data

1. Submit operation and maintenance data.
2. Include assembly drawings, bearing data (including replacement sizes) and lubrication instructions.

## 1.6 DELIVERY, STORAGE AND HANDLING

A. Deliver products to site.

B. Protect motors stored on-site from weather and moisture by maintaining factory covers and suitable weather-proof covering. For extended outdoor storage, remove motors from equipment and store separately.

## 1.7 SPARE PARTS

Not Applicable.

## 1.8 WARRANTY

A. Provide five year manufacturer's warranty for motors equal to or larger than 1 hp.

# PART 2 - PRODUCTS

## 2.1 MOTORS

A. Acceptable Manufacturers

1. Baldor Electric
2. Emerson Motors
3. GE Motors
4. Lincoln
5. Marathon Electric
6. Siemens
7. TECO – Westinghouse

B. General Motor Requirements Applicable to All Motors

1. Comply with the requirements in this section except when stricter requirements are specified on the drawings or Division 23 Equipment Sections.
2. Comply with NEMA MG 1.
3. Motor Size:
   a. Motors shall be capable of driving the intended load and not exceeding the design horsepower.
   b. Motors shall be selected such that the brake horsepower (bhp), including drive losses of the driven equipment, does not exceed 90% of the motor nameplate rating at design conditions.
4. Visible Nameplate:
   a. Provide a visible motor nameplate indicating motor horsepower, voltage, phase, cycles, RPM, full load amps, locked rotor amps, frame size, manufacturer's name and model number, and service factor.
   b. Nameplates for all three-phase motors shall also indicate power factor and efficiency.
   c. Nameplate shall indicate "Premium Efficiency" where such a motor is provided.
5. Motor Characteristics:
   a. Duty Rating:
      (1) Continuous duty at ambient temperature of 104°F (40°C) and at altitude of 3,300 feet above sea level.

(2) Motors shall be capable of not less than six (6) starts in a twenty-four (24) hour period.

b. Capacity and Torque Characteristics:

(1) Sufficient to start, accelerate and operate connected loads at designated speeds, at installed altitude and environment, with indicated operating sequence, and without exceeding nameplate ratings or service factor.

6. Enclosures:

a. Enclosure Material:

(1) Cast iron for motor frame 25 hp and larger.
(2) Rolled steel for motor frame sizes smaller than 25 hp.

b. Open drip proof (ODP) for indoor locations not in an airstream.

C. Three Phase Motors

1. Efficiency:

a. Motor efficiencies shall at a minimum comply with the most recent editions of the International Energy Conservation Code and ASHRAE Standard 90.1.

b. All general purpose, three-phase motors from 1 hp up to 200 hp driving Division 23 specified equipment (e.g. chilled water pumps shall be premium efficiency and meet the minimum efficiencies specified in the following table:

| | **Totally Enclosed, Fan Cooled Motors** | | | **Open, Drip-Proof Motors** | | |
|---|---|---|---|---|---|---|
| **hp** | **1200 rpm** | **1800 rpm** | **3600 rpm** | **1200 rpm** | **1800 rpm** | **3600 rpm** |
| 1 | 82.5 | 85.5 | 77.0 | 82.5 | 85.5 | 77.0 |
| 1.5 | 87.5 | 86.5 | 84.0 | 86.5 | 86.5 | 84.0 |
| 2 | 88.5 | 86.5 | 85.5 | 87.5 | 86.5 | 85.5 |
| 3 | 89.5 | 89.5 | 86.5 | 88.5 | 89.5 | 85.5 |
| 5 | 89.5 | 89.5 | 88.5 | 89.5 | 89.5 | 86.5 |
| | | | | | | |
| 7.5 | 91.0 | 91.7 | 89.5 | 90.2 | 91.0 | 88.5 |
| 10 | 91.0 | 91.7 | 90.2 | 91.7 | 91.7 | 89.5 |
| 15 | 91.7 | 92.4 | 91..0 | 91.7 | 93.0 | 90.2 |
| 20 | 91.7 | 93.0 | 91.0 | 92.4 | 93.0 | 91.0 |
| 25 | 93.0 | 93.6 | 91.7 | 93.0 | 93.6 | 91.7 |
| | | | | | | |
| 30 | 93.0 | 93.6 | 91.7 | 93.6 | 94.1 | 91.7 |
| 40 | 94.1 | 94.1 | 92.4 | 94.1 | 94.1 | 92.4 |
| 50 | 94.1 | 94.5 | 93.0 | 94.1 | 94.5 | 93.0 |
| 60 | 94.5 | 95.0 | 93.6 | 94.5 | 95.0 | 93.6 |
| 75 | 94.5 | 95.4 | 93.6 | 94.5 | 95.0 | 93.6 |
| | | | | | | |

| hp | Totally Enclosed, Fan Cooled Motors | | | Open, Drip-Proof Motors | | |
|---|---|---|---|---|---|---|
| | 1200 rpm | 1800 rpm | 3600 rpm | 1200 rpm | 1800 rpm | 3600 rpm |
| 100 | 95.0 | 95.4 | 94.1. | 95.0 | 95.4 | 93.6 |
| 125 | 95.0 | 95.4 | 95.0 | 95.0 | 95.4 | 94.1 |
| 150 | 95.8 | 95.8 | 95.0 | 95.4 | 95.8 | 94.1 |
| 200 | 95.8 | 96.2 | 95.4 | 95.4 | 95.8 | 95.0 |

2. Service Factor
   a. Per the following NEMA Service Factor Table

| HP | 900 rpm | 1200 rpm | 1800 rpm | 3600 rpm |
|---|---|---|---|---|
| ⅙ to ⅓ | 1.35 | 1.35 | 1.35 | 1.35 |
| ½ | 1.15 | 1.25 | 1.25 | 1.25 |
| ¾ | 1.15 | 1.15 | 1.25 | 1.25 |
| 1 | 1.15 | 1.15 | 1.15 | 1.25 |
| 1½ to 150 | 1.15 | 1.15 | 1.15 | 1.15 |

   b. Do not take advantage of service factors in selection of motors.
3. Rotor: Random-wound, squirrel cage.
4. Bearings:
   a. Grease lubricated anti-friction ball bearings with housings equipped with plugged provision for re-lubrication, rated for minimum AFBMA 9, L-10 life of 150,000 hours for direct-coupled applications and 50,000 hours for belted applications. Calculate bearing load with NEMA minimum V-belt pulley with belt center line at end of NEMA standard shaft extension. Stamp bearing sizes on nameplate.
   b. Motors not installed in horizontal position shall be provided with suitable bearings.
   c. Grease fittings shall be provided. Both fittings and drain plugs shall be fully accessible while the motor is in operation. Where motors are installed in an inaccessible location, the grease fitting shall be extended to an accessible location. High pressure hydraulic steel tubing and fittings shall be used.
5. Temperature Rise and Insulation:
   a. Motors 1 hp and larger: NEMA Class B temperature rise with Class F insulation.
6. Starting Code Designation:
   a. Motors smaller than 15 hp: Manufacturer's standard starting characteristics.
   b. Motors 15 hp and larger: NEMA starting Code F or Code G.
7. Motor windings shall be first grade copper.

D. Additional Requirements for Three Phase Motors Used with Variable Frequency Drives

1. Motor shall be "inverter-ready" by complying with or exceeding the NEMA MG1 Part 31 requirements regarding special purpose motors for use with variable frequency drives.
2. Windings shall be copper magnet wire with moisture-resistant insulation, varnish, designed and tested to resist transient spikes, high frequencies, and short time rise pulses, produced by pulse-width modulated inverters.
3. Motors shall be equipped with shaft grounding ring(s) to dissipate potential VFD-induced motor shaft currents by grounding through the motor housing.
   a. Provide one (1) grounding ring per motor.
   b. Provide solid ring or split ring, based on grounding ring manufacturer's recommendations.
   c. Shaft grounding brushes or insulated bearings are not acceptable.
   d. Shaft Grounding Rings shall be factory-installed or field-installed by the motor manufacturer or field-installed by the contractor.
   e. Acceptable Product: Aegis SGR Bearing Protection Ring as manufactured by Electric Static Technology.
   f. This provision for grounding devices shall not apply to motors used in environments defined as Class 1 Division 1, Division 2, or Class 1 Zone 1, Zone 2 hazardous locations.

## PART 3 - EXECUTION

### 3.1 APPLICATION

A. Electrical Service

1. Motors ¾ hp and larger shall operate on 480 or 208 volt, three-phase 60 Hertz, alternating current, except as otherwise noted.

B. Motor speed shall not exceed 1,750 rpm unless otherwise specified.

### 3.2 INSTALLATION

A. Factory Installed Motors

Not used

B. Field Installed Motors

1. Examine area to receive field installation for compliance with required tolerances and other conditions affecting performance. Examine roughing-in of conduit systems to verify actual locations. Correct any deficiencies found during examination.
2. Anchor motor assembly to base, adjustable rails or other support according to manufacturers' instructions. Level and align.
3. Perform testing of motor after installation:
   a. Run each motor. Demonstrate correct rotation, alignment and speed.
   b. Test interlocks and control features for proper operation.
   c. Verify that current in each phase is within nameplate rating.

d. Perform an acceptance test in accordance with NETA Acceptance Testing Specification, Section 7.15.1. Certify compliance with test parameters.

e. Correct any deficiencies found by test and repeat acceptance test.

4. Clean motors according to manufacturers' written instructions.

C. Field Installed Bearing Protection Rings

1. Verify applicable maximum and minimum temperature and humidity allowances with manufacturer's technical support.
2. Based on motor application, motor size, motor frame, and bearing types, use shaft grounding ring kit that corresponds to shaft grounding ring manufacturer's installation recommendations and instructions.
3. Based on manufacturer's installation instructions, clean the motor shaft and other motor surfaces to remove any coatings, paint or other nonconductive material to prepare all conducting surfaces.
4. Perform pre-installation Ohms test:

   a. Place the positive and negative meter leads on the shaft at a place where the grounding ring fibers will contact the shaft. Each motor will have a different reading but in general you should have a maximum reading of 2 ohms. If the reading is higher than 2 ohms, provide additional cleaning retest.

5. Apply conductive shaft surface coating per manufacturer's recommendations and installation instructions.
6. As required by the installation and per manufacturer's recommendations and installation instructions:

   a. Drill and tap installation holes in the motor end bracket per manufacturer's installation instructions.

   b. Apply manufacturer supplied adhesive and hold in place until the adhesive sets.

7. Perform post-installation testing:

   a. Perform Ohms test to verify conductive path to ground using ohm meter. Place one probe on metal frame of grounding ring and one probe on the motor frame. NOTE: Motor must be grounded to common earth ground with drive according to application standards.

   b. On motors 25hp and larger test to detect bearing currents and perform shaft-to-ground voltage analysis. The voltage and current analysis is to be performed in accordance with a method detailed in IEEE-112-2004, "IEEE Standard Test Procedure for Polyphase Induction Motors and Generators," paragraph 8.3, Shaft Current and Voltage.

END OF SECTION

P:\13 PROJECTS\P13-0334-00MCHENRY\04 DESIGN\11 SPECS\CONSTRUCTION SPECS\20 0513-MOTOR REQUIREMENTS FOR M-P-FP.DOCX

# SECTION 20 0519
# METERS AND GAUGES FOR MECHANICAL, PLUMBING, AND FIRE SUPPRESSION

## PART 1 - GENERAL

### 1.1 SCOPE OF WORK

A. Meters and gauges specifically applicable to Divisions 20, 21, 22, and 23, including:

1. Thermometers for piping
2. Pressure gauges for piping
3. Test plugs for piping

### 1.2 CODES AND STANDARDS (USE LATEST EDITION)

A. American Society of Mechanical Engineers (ASME)

1. ASME B40.100 – Pressure Gauges and Gauge Attachments
2. ASME B40.200 – Thermometers, Direct Reading and Remote Reading
3. ASME B40.3 – Bimetallic Actuated Thermometers

### 1.3 SUBMITTALS

A. Product Data: For each type of product indicated provide manufacturer's literature.

B. Shop Drawings: Schedule for instrumentation indicating manufacturer's number, scale range, and location for each.

C. Operations and Maintenance Data: Submit under provisions of Division 01. Accurately record location of all instrumentation.

## PART 2 - PRODUCTS

### 2.1 LIQUID-IN-GLASS THERMOMETERS FOR PIPING

A. Acceptable Manufacturers

1. Ashcroft Inc.
2. H.O. Trerice Company
3. Miljoco Corporation
4. Weiss Instruments, Inc.

B. Direct reading liquid-in-glass thermometer complying with ASME B40.200

1. Case: Die-cast aluminum, 7" long
2. Tube: Blue colored spirit (organic) filled, lens front
3. Tube Background: Aluminum white with permanently etched scale calibration in degrees Fahrenheit
4. Window: Clear acrylic or glass; provide glass for steam and condensate applications
5. Connector: Adjustable angle joint with positive locking device
6. Stem: Brass of length to suit installation
7. Accuracy: ±1% scale division
8. Thermowells: Brass, pressure-tight, socket-type fitting made for insertion into piping and of type, diameter, and length required to hold thermometer clear of any pipe insulation.
9. Basis of Design: H.O. Trerice Company Model AX9-2

## 2.2 PRESSURE GAUGES FOR PIPING

A. Acceptable Manufacturers

1. Ashcroft Inc.
2. H.O. Trerice Co.
3. Miljoco Corporation
4. Weiss Instruments, Inc.

B. Dial type pressure gauge complying with ASME B40.100

1. Case: 4½" diameter black aluminum
2. Pressure Element Assembly: Bronze bourdon tube
3. Pressure Connection: Brass socket
4. Movement: Rotary stainless steel
5. Dial: Aluminum with permanently etched black scale calibrated in psi on white background
6. Window: Clear glass
7. Accuracy: ±0.5% percent of full scale
8. Basis of Design: H.O. Trerice Company Model 500XB

C. Pressure Gauge Accessories

1. Valves
   a. ¼ NPT brass needle valve for a maximum pressure of 2,000 psig
   b. Basis of Design: H.O. Trerice Company Series 735
2. Impulse Dampeners
   a. Brass with ¼ NPT connection
   b. Basis of Design: H.O. Trerice Company Series 870
3. Coil Syphons
   a. Seamless brass, schedule 40, ¼ NPT connections
   b. H.O. Trerice Company Series 885

## 2.3 TEST PLUGS FOR PIPING

A. Acceptable Manufacturers

1. Petersen Products Co.
2. Sisco Manufacturing Company, Inc.
3. H.O. Trerice Company
4. Watts Water Technologies

B. Test Plug (for insulated pipe)

1. ¼" by 3" long brass fitting for receiving ⅛" outside diameter pressure or temperature probe
   a. Core Inserts: Two self-sealing rubber valve cores with a color coded cap strap with gasket
      (1) Neoprene (maximum 200°F) at 500 psi
      (2) Nordel (maximum 275°F) at 500 psi
   b. Minimum Pressure and Temperature Rating: 1,000 psi at 140°F
   c. Basis of Design: Model 100XL (neoprene core) or Model 110XL (Nordel core) manufactured by Petersen Products Co.

C. Test Kit: Furnish one test kit containing one 0-100 psig range pressure gauge, two gauge adapters with 1/8" probes, one 25°F to 125°F low range thermometer, one 0°F to 220°F high range thermometer, and one internally padded and fitted carrying case. Model 1500XL manufactured by Petersen Products Co.

## PART 3 - EXECUTION

### 3.1 APPLICATIONS

A. Pressure Gauges

1. Provide pressure gauges in locations indicated on drawings with a scale range of those shown below such that the range is between 1½ and 2 times two times the operating pressure of the system.

   a. 0-15 psi
   b. 0-30 psi
   c. 0-60 psi
   d. 0-100 psi

B. Thermometers

C. Install liquid-in-glass thermometers in all chilled water, hot water, condenser water, steam and condensate piping applications in locations shown on drawings and with ranges as shown in the following table:

| System | Range (degrees F) |
|---|---|
| Chilled water | 0°F to 100°F with 1°F scale divisions |

### 3.2 INSTALLATION

A. Install in accordance with manufacturer's instructions.

B. Install gauges and thermometers in locations where they are easily read from normal operating level.

C. Thermometers for Pipes

1. Install direct-mounting thermometers and adjust vertical and tilted positions.
2. Install thermometers in piping systems in thermowells with socket extending to center of pipe or a minimum of 2" into fluid for piping less than 4". Enlarge pipes smaller than 2½" for installation of thermowells.

D. Pressure Gauges for Pipes

1. Install direct-mounting pressure gauges in piping tees with pressure gauge located on pipe at most readable position.
2. Provide needle valve and impulse dampener for each pressure gauge installed in pipe carrying all fluids except steam.

E. Install test plugs in tees in piping where indicated.

END OF SECTION

P:\13 PROJECTS\P13-0334-00MCHENRY\04 DESIGN\11 SPECS\CONSTRUCTION SPECS\20 0519-METERS AND GAUGES FOR M-P-FP.DOCX

**SECTION 20 0529**
**HANGERS AND SUPPORTS FOR MECHANICAL, PLUMBING AND FIRE SUPPRESSION SYSTEMS**

## PART 1 - GENERAL

### 1.1 WORK INCLUDED

A. Hangers and supports specifically applicable to Divisions 20, 21, 22, and 23, including:

1. Multiple Pipe Supports
2. Roof Supports
3. Miscellaneous materials

### 1.2 CODES AND STANDARDS

A. American Society of Mechanical Engineers (ASME)

1. ASME B31.1 - Power Piping
2. ASME B31.5 - Refrigeration Piping
3. ASME B31.9 - Building Services Piping

B. American Society for Testing and Materials (ASTM)

1. ASTM A1011 - Specification for Steel, Sheet and Strip, Hot-Rolled, Carbon, Structural, High-Strength Low-Alloy and High-Strength Low-Alloy with Improved Formability *(Formerly ASTM A570)*
2. ASTM A123 - Specification for Zinc (Hot-Galvanized) Coatings on Products Fabricated from Rolled, Pressed, and Forged Steel Shapes, Plates, Bars, and Strip
3. ASTM A36 - Steel Plates, Shapes and Bars
4. ASTM A653 - Specification for Steel Sheet, Zinc-Coated by the Hot-Dip Process
5. ASTM B633 - Specification for Electrodeposited Coatings of Zinc on Iron and Steel
6. ASTM C150 - Portland Cement
7. ASTM C404 - Uniformly Graded Natural Sand
8. ASTM E-814 - Fire Tests of Through-Penetration Fire Stops

C. American Welding Society (AWS)

1. Specifications for Qualification of Welding Procedures and Welders

D. American Water Works Association (AWWA)

E. Building Officials and Code Administrators International (BOCAI)

1. BOCA - National Building Code
2. BOCA - National Mechanical Code

F. International Conference of Building Officials (ICBO)

1. ICBO - Uniform Building Code

G. Manufacturers Standardization Society of the Valve and Fittings Industry (MSS)

1. MSS SP 58 - Pipe Hangers and Supports - Materials, Design and Manufacturer
2. MSS SP 69 - Pipe Hangers and Supports - Selection and Application
3. MSS SP 89 - Pipe Hangers and Supports - Fabrication and Installation Practices

H. National Fire Protection Association (NFPA)

1. NFPA 13 - Standard for the Installation of Sprinkler Systems

2. NFPA 14 - Standard for the Installation of Standpipe and Hose Systems
3. NFPA 101 - Code for Safety to Life from Fires in Buildings and Structures

I. Southern Building Code Congress International (SBCCI)

1. SBCCI - Standard Building Code

J. Sheet Metal and Air Conditioning Contractors' National Association (SMACNA)

1. SMACNA - HVAC Duct Construction Standards, Metal and Flexible

K. UL

1. UL 1479 - Fire Tests of Through Penetration Firestops and Building Joint Systems

L. Factory Mutual (FM)

**1.3 QUALITY ASSURANCE**

A. Supports for Mechanical and Plumbing Piping: Provide products in compliance with MSS Standards:

1. Provide pipe hangers and supports of which materials, design and manufacture comply with MSS SP-58.
2. Select and apply pipe hangers and supports, complying with MSS SP-69.
3. Fabricate and install pipe hangers and supports, complying with MSS SP-89.
4. Terminology used in this section is defined in MSS SP-90.

B. Supports for Sprinkler Piping: Provide products which are UL listed and FM approved and in conformance with NFPA 13.

C. Supports for Standpipes: Provide products which are UL listed and FM approved and in conformance with NFPA 14.

D. Structural Steel Welding Qualifications: Qualify procedures and personnel according to AWS D1.1/D1.1M, "Structural Welding Code - Steel."

E. Pipe Welding Qualifications: Qualify procedures and operators according to ASME Boiler and Pressure Vessel Code.

**1.4 SUBMITTALS**

A. Product Data: Submit product data on all hanger and support devices, including shields and attachment methods. Product data to include, but not limited to materials, finishes, approvals, load ratings, and dimensional information.

B. Shop Drawings: Show fabrication and installation details and include Product Data for components:

1. Metal framing systems
2. Pipe stands

**1.5 DELIVERY, STORAGE AND HANDLING**

A. Accept materials on site in original factory packaging, labeled with manufacturer's identification.

B. Protect from weather and construction traffic, dirt, water, chemical, and damage, by storing in original packaging.

## PART 2 - PRODUCTS

### 2.1 PIPE HANGERS AND SUPPORTS

A. Acceptable Manufacturers

1. B-Line Systems, Inc.
2. Fee and Mason Manufacturing Company
3. Anvil International

B. Construction

1. General Service

a. Exterior insulated pipe: Carbon steel with hot-dip galvanized finish after fabrication

C. Piping system classification

1. Type C-1 Cold Systems (33°F - 59°F)

a. Chilled Water

D. Pipe supports shall be provided as indicated the table below.

| Pipe Hanger and Support MSS Types | | | | | | | | | |
|---|---|---|---|---|---|---|---|---|---|
| Class | | C-1 | | | | C-2 | | | |
| Pipe Size | | ≤ 2″ | | > 2″ | | ≤ 2″ | | > 2″ | |
| Insulation[1] | | Yes | No | Yes | No | Yes | No | Yes | No |
| Horizontal Pipe Attachments | Steel Clips | 26 w/40 | 24 & 26 | 26 w/ 40 | 24 & 26 | N/A | N/A | N/A | N/A |
| | Malleable Iron Rings | N/A | 6, 11, & 12 | N/A | 6, 11, & 12 | N/A | N/A | N/A | N/A |
| | Steel Bands | 1 w/ 40 | 1 | 1 w/ 40 | 1 | 1 w/ 40 | 1 | 1 w/ 40 | 1 |
| | Steel Clamps | 3 & 4 | 3 & 4 w/ 40 | 3 & 4 | 3 & 4 w/ 40 | N/A | 3 & 4 | N/A | 3 & 4 |
| | Cast Iron Hanging Rolls | N/A | N/A | 41 & 43 w/ 40 | 41 & 43 | N/A | N/A | 41 & 43 w/ 40 | 41 & 43 |
| | Cast Iron Supporting Rolls | N/A | N/A | 44, 45, & 46 w/ 39 | 44, 45, & 46 | N/A | N/A | 44, 45, & 46 w/ 39 | 44, 45, & 46 |
| | Steel Trapezes | 59 w/ 40 | N/A | 59 w/ 40 | N/A | N/A | N/A | N/A | N/A |
| | Steel Protection Saddles and Shields | 40 | N/A | 40 | N/A | 40 | N/A | 40 | N/A |
| | Steel or Cast Iron Stanchions | 36, 37, & 38 w/ 40 | 36, 37, & 38 | 36, 37, & 38 w/ 40 | 36, 37, 38 | 36, 37, & 38 w/ 40 | 36, 37, 38 | 36, 37, & 38 w/ 40 | 36, 37, 38 |
| | Steel Welded Attachments | (2) | | (2) | | (2) | | (2) | |

(1) *Hangers on insulated systems shall incorporate protection saddles or shields or shall be clamped or welded to the pipe and project through the insulation to provide external attachment.*

(2) *The design shall be in accordance with MSS SP-58.*

| Pipe Hanger and Support MSS Types – Part 3 | | | | | | |
|---|---|---|---|---|---|---|
| Class | | | A-1 | B | C-1 | C-2 |
| Vertical Pipe Attachments | | Steel Riser Clamps (2 Bolt) | 8 | 8 | 8 | 8 |
| | | Steel Riser Clamps (4 Bolt)(1) | 42 | 42 | 42 | 42 |
| Hanger Rod Fixtures | Steel or Malleable Iron | Turn Buckles | 13 & 15 | 13 & 15 | 13 & 15 | 13 & 15 |
| | | Swing Eyes | 16 & 17 | 16 & 17 | 16 & 17 | 16 & 17 |
| | | Clevises | 14 | 14 | 14 | 14 |
| Building Structure Attachments | Steel and/or Malleable Iron | Inserts(2) | 18 | 18 | 18 | 18 |
| | | C-Clamps(3) | 19 & 23 | 19 & 23 | 19 & 23 | 19 & 23 |
| | | Beam Clamps(4) | 20, 21, 25, 27, 28, 29, & 30 | 20, 21, 25, 27, 28, 29, & 30 | 20, 21, 25, 27, 28, 29, & 30 | 20, 21, 25, 27, 28, 29, & 30 |
| | | Welded Attachments(1) | 22, 57, & 58 | 22, 57, & 58 | 22, 57, & 58 | 22, 57, & 58 |
| | | Brackets | 31, 32, 33, & 34 | 31, 32, 33, & 34 | 31, 32, 33, & 34 | 31, 32, 33, & 34 |

(1) *The design shall be in accordance with MSS SP-58.*
(2) *Refer to 2.7 – Upper Attachments for approved inserts.*
(3) *All C-Clamps shall be provided with a retaining strap held securely to the clamp with a hex nut of locking slot. C-Clamps shall not be used with bar joist structure.*
(4) *Clamps for direct attachment to bar joist structure shall be MSS Type 21 center beam clamp located at the plates along the bottom or top chord of the joist.*

## 2.2 MULTIPLE PIPE SUPPORT SYSTEMS

A. Acceptable Manufacturers

1. Cooper B-Line
2. Anvil International
3. Unistrut Corporation

B. Multiple Pipe Supports: Pipe supporting elements mounted to cold formed 12 gauge strip steel channel framing with thermoset acrylic finish. Provide specified pipe supporting elements to keep pipe in alignment and allow for expansion. Provide all channel nuts and accessories required to mount pipe supporting elements. Model P1000 by Unistrut.

C. Provide tubing clamps at each pipe support. Provide cushion inserts for uninsulated tubing.

D. Select hanger rods for two times the trapeze loads but not less than 3/8″ diameter.

E. Secure hanger rod with square washers and locking nuts on top and bottom of strut.

**2.3 ROOF SUPPORTS**

A. Permanent pipe support

1. Acceptable Manufacturers:

   a. Pate PRS/MPRS

2. Factory fabricated 18 gauge galvanized sheet steel support curb with fully welded corner seams, and 18 gauge galvanized steel counterflashing with galvanized steel channel track attached.
3. Vertical and horizontal adjustable roller assembly of galvanized steel channel track, galvanized steel fittings, washers and nuts and a painted cast iron roller.
4. Support shall be designed to be compatible with roofing system and roofing pitch.
5. Fixed Height Roller

   a. UV resistant rubber base with fixed height electroplated cast iron MSS type 44 pipe roll. Cooper B-Line DBR.

6. Adjustable Height Channel

   a. Roof support: UV resistant rubber base with two ½″ galvanized steel threaded rod risers and one 12 gauge galvanized steel horizontal channel support. Cooper B-Line DBE.
   b. Pipe support: Electroplated cast iron MSS type 44 pipe roll

7. Fixed Height Channel

   a. Roof support: UV resistant rubber base with fixed height 12 gauge galvanized steel horizontal channel support. Cooper B-Line DB6.
   b. Pipe support: Electroplated cast iron MSS type 44 pipe roll

**2.4 MISCELLANEOUS MATERIALS**

A. Metal Framing: Provide products complying with NEMA STD ML 1.

B. Steel Plates, Shapes and Bars: Provide products complying with ASTM A 36.

C. Cement Grout: Portland cement (ASTM C 150, Type I or Type III) and clean uniformly graded, natural sand (ASTM C 404, Size No. 2). Mix at a ratio of 1.0 part cement to 3.0 parts sand, by volume, with minimum amount of water required for placement and hydration.

**PART 3 - EXECUTION**

**3.1 PIPE HANGERS AND SUPPORTS**

A. Hanger and Support Installation

1. Thermal-Hanger Shield Installation: Install in pipe hanger or shield for insulated piping.
2. Pipe Stand Installation:

   a. Pipe Stand Types except Curb-Mounted Type: Assemble components and mount on smooth roof surface. Do not penetrate roof membrane.

3. Install hangers and supports complete with necessary attachments, inserts, bolts, rods, nuts, washers, and other accessories.
4. Install hangers and supports to allow controlled thermal and seismic movement of piping systems, to permit freedom of movement between pipe anchors, and to facilitate action of expansion joints, expansion loops, expansion bends, and similar units.
5. Load Distribution: Install hangers and supports so that piping live and dead loads and stresses from movement will not be transmitted to connected equipment.
6. Pipe Slopes: Install hangers and supports to provide indicated pipe slopes and to not exceed maximum pipe deflections allowed by ASME B31.9 for building services piping.

B. Hanger and Support Spacing

1. Pipe shall be adequately supported by pipe hanger and supports specified in Part 3. Hangers for insulated pipes shall be sized to accommodate insulation thickness.
2. Horizontal steel piping shall be supported in accordance with MSS SP-69 Tables 3, 4, and 5, excerpts of which follow below:

| Maximum Horizontal Pipe Hanger and Support Spacing Without MSS Type 40 Shields (feet) | | | | | | | | | |
|---|---|---|---|---|---|---|---|---|---|
| Nominal Pipe or Tube Size | Standard Weight Steel Pipe | | Copper Tube | | Fire Protection | Ductile Iron Pipe | Cast Iron Soil | Glass | Plastic |
| | Water Service | Vapor Service | Water Service | Vapor Service | | | | | |
| 1/4 | 7 | 8 | 5 | 5 | Follow requirements of the NFPA. | 20 feet maximum spacing; minimum of one hanger per pipe section close to the joint behind the bell and at change of direction and branch connections. For pipe sizes six inches and under subjected to loadings other than weight of pipe and contents, the span shall be limited to the maximum spacing for water service steel pipe. | 10 feet maximum spacing; minimum of one hanger per pipe section close to joint on the barrel and at change of direction and branch connections. | 8 feet maximum spacing, follow manufacturer's recommendations. | Follow pipe manufacturer's recommendations for material and service condition. |
| 3/8 – 1/2 | 7 | 8 | 5 | 6 | | | | | |
| 3/4 | 7 | 9 | 5 | 7 | | | | | |
| 1 | 7 | 9 | 6 | 8 | | | | | |
| 1-1/4 | 7 | 9 | 7 | 9 | | | | | |
| 1-1/2 | 9 | 12 | 8 | 10 | | | | | |
| 2 | 10 | 13 | 8 | 11 | | | | | |
| 2-1/2 | 11 | 14 | 9 | 13 | | | | | |
| 3 | 12 | 15 | 10 | 14 | | | | | |
| 4 | 14 | 17 | 12 | 16 | | | | | |
| 5 | 16 | 19 | 13 | 18 | | | | | |
| 6 | 17 | 21 | 14 | 20 | | | | | |
| 8 | 19 | 24 | 16 | 23 | | | | | |
| 10 | 22 | 26 | 18 | 25 | | | | | |
| 12 | 23 | 30 | 19 | 28 | | | | | |
| 14 | 25 | 32 | | | | | | | |
| 16 | 27 | 35 | | | | | | | |
| 18 | 28 | 37 | | | | | | | |
| 20 | 30 | 39 | | | | | | | |
| 24 | 32 | 42 | | | | | | | |
| 30 | 33 | 44 | | | | | | | |

| Maximum Horizontal Pipe Hanger, Support, and Shield Spacing With MSS Type 40 Shields (ft) | | | |
|---|---|---|---|
| **Standard Weight Steel Pipe** | | | |
| Nominal Pipe Size | Shield Length (inches) | Shield Thickness (gage) | Hanger and Support Spacing (feet) |
| 1/2 - 1-1/4 | 12 | 18 | 7 |
| 1-1/2 | 12 | 18 | 9 |
| 2 - 3 | 12 | 18 | 10 |
| 4 | 12 | 16 | 10 |
| 5 - 6 | 18 | 16 | 10 |
| 8 - 14 | 24 | 14 | 10 |
| 16 - 24 | 24 | 12 | 10 |
| **Copper Tubing** | | | |
| Nominal Pipe Size | Shield Length (inches) | Shield Thickness (gage) | Hanger and Support Spacing (feet) |
| 1/4 – 3/4 | 12 | 18 | 5 |
| 1 | 12 | 18 | 6 |
| 1-1/4 | 12 | 18 | 7 |
| 1-1/2 - 2 | 12 | 18 | 8 |
| 2-1/2 | 12 | 18 | 9 |
| 3 | 12 | 18 | 10 |
| 4 | 12 | 16 | 10 |
| 5 - 6 | 18 | 16 | 10 |
| 8 | 24 | 14 | 10 |

## 3.2 ROOF SUPPORTS

A. Verify that roofing system is complete and roof surfaces are smooth, flat, and ready to receive work of this section.

B. Clean surfaces of roof in areas to received supports.

C. Install in accordance with manufacturer's instructions.

D. Pipe and Duct Supports

1. Locate bases and support framing as indicated on drawings and as specified herein. Provide complete and adequate support of all piping and ducts whether or not all required devices are shown.
2. The use of wood for supporting piping is not permitted.
3. Provide supports spaced so deflection of piping does not exceed L/240 of span.
4. Install framing at spacing indicated, but in no case at greater than 10 feet (3 m) on center.

## 3.3 METAL FABRICATIONS

A. Fit exposed connections together to form hairline joints. Field weld connections that cannot be shop welded because of shipping size limitations.

B. Field Welding: Comply with AWS D1.1/D1.1M procedures for shielded, metal arc welding; appearance and quality of welds; and methods used in correcting welding work; and with the following:

1. Use materials and methods that minimize distortion and develop strength and corrosion resistance of base metals.
2. Obtain fusion without undercut or overlap.
3. Remove welding flux immediately.
4. Finish welds at exposed connections so no roughness shows after finishing and so contours of welded surfaces match adjacent contours.

**3.4 ADJUSTING**

A. Hanger Adjustments: Adjust hangers to distribute loads equally on attachments and to achieve indicated slope of pipe.

B. Trim excess length of continuous-thread hanger and support rods to 1½".

C. Support Adjustment: Provide grout under supports so as to bring piping and equipment to proper level and elevations.

**3.5 PAINTING**

Not Applicable

END OF SECTION

P:\13 PROJECTS\P13-0334-00MCHENRY\04 DESIGN\11 SPECS\CONSTRUCTION SPECS\20 0529 HANGERS AND SUPPORTS FOR M-P-FP.DOCX

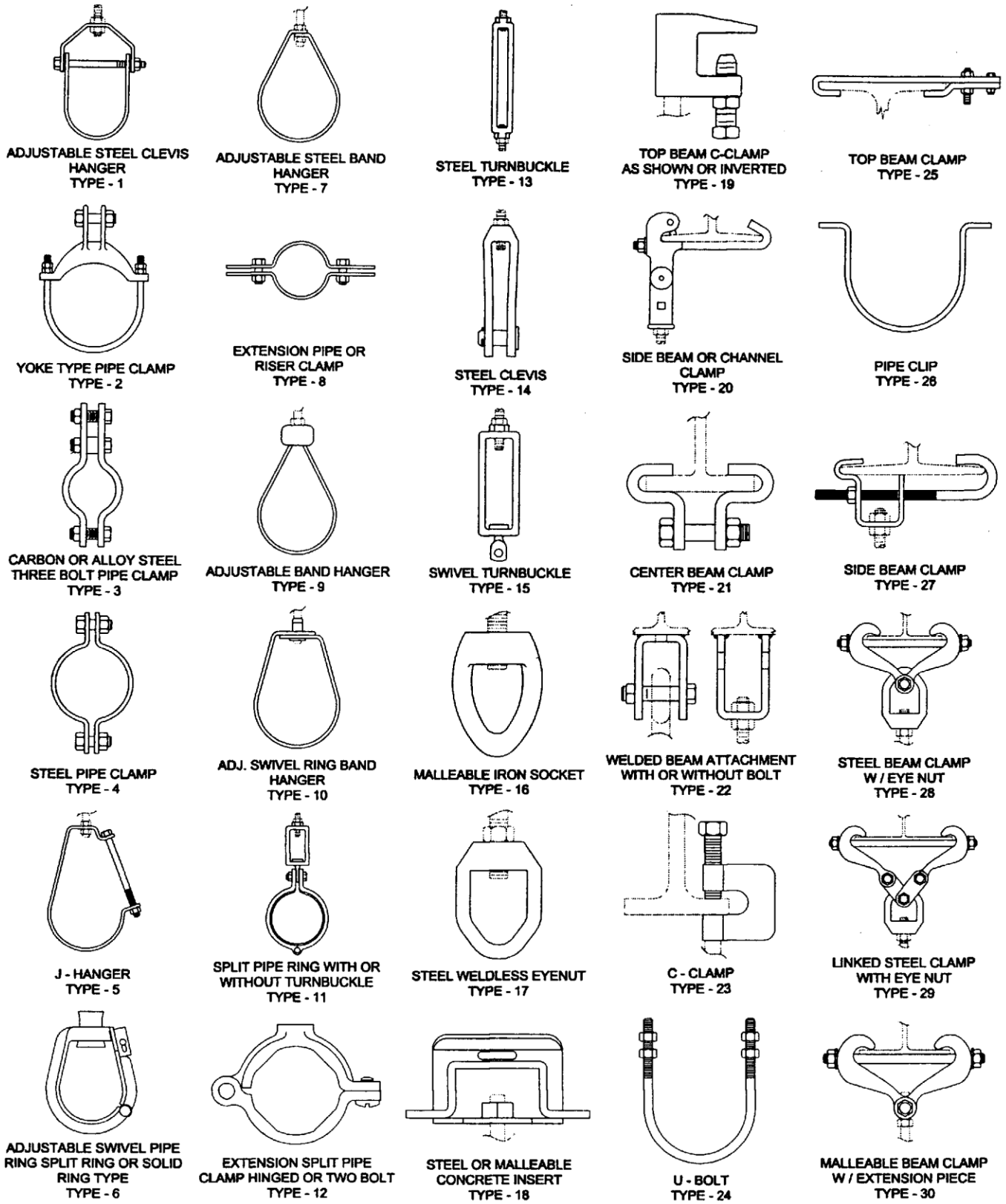


**FIGURE 1. TYPE CHART**

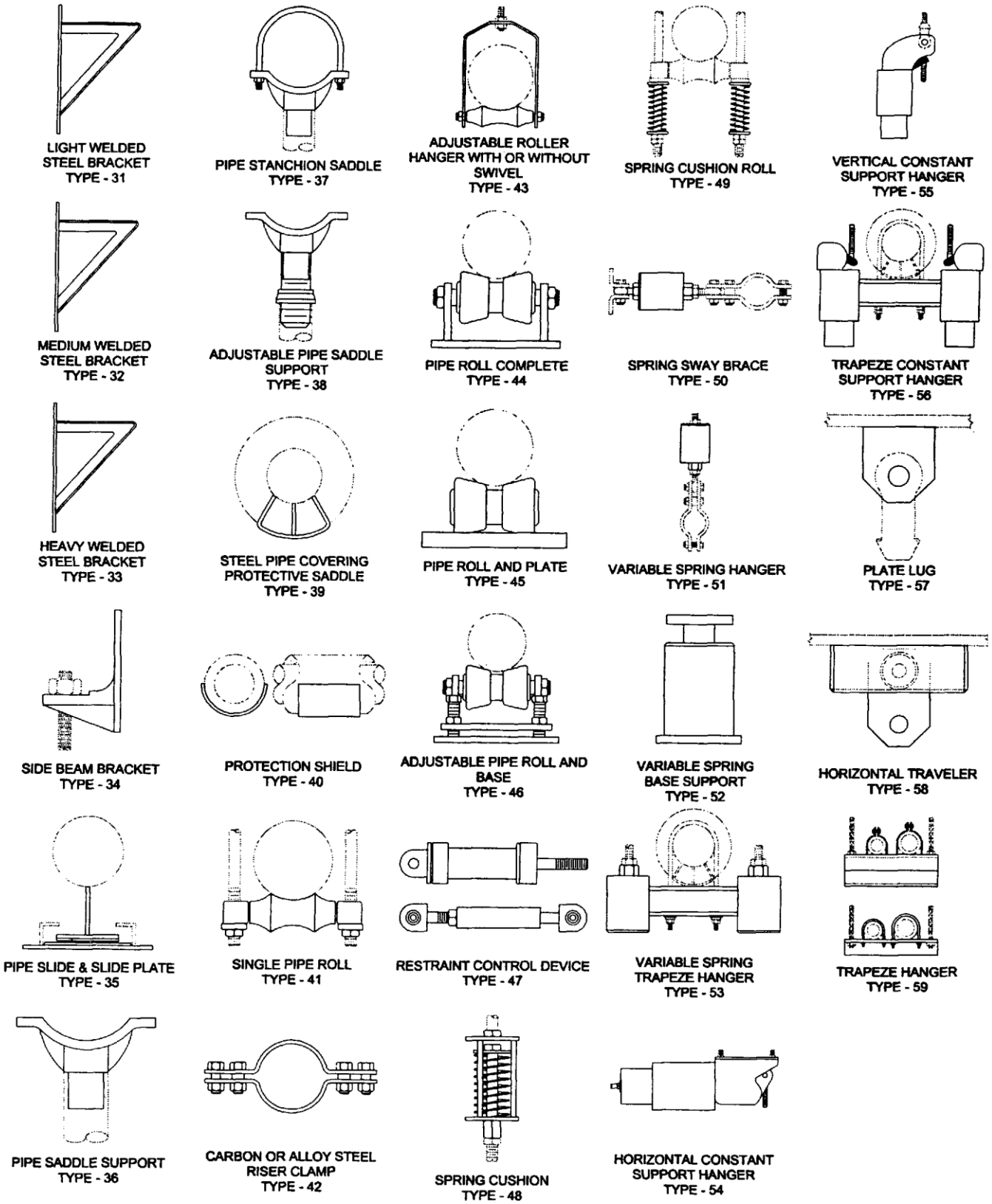


**FIGURE 1. TYPE CHART**

# SECTION 20 0700
# THERMAL INSULATION FOR MECHANICAL, PLUMBING, AND FIRE SUPPRESSION

## PART 1 - GENERAL

### 1.1 SCOPE OF WORK

A. Thermal insulation products specifically applicable to Divisions 20 and 23, including:

1. Insulation
2. Protective coverings
3. Accessories
4. Repairs to all existing insulation cut or damaged by work performed under this Contract.

B. Products furnished but not installed under this section: None.

C. Products installed but not furnished under this section: None.

D. Services provided:

1. Design - None.
2. Training - None.
3. Obtain permits - None.

### 1.2 DEFINITIONS

A. Piping Insulation: Thermal insulation applied to prevent heat transmission to or from a piping system.

B. Ductwork Insulation: Thermal insulation applied to prevent heat transmission to or from a duct system.

C. Equipment Insulation: Thermal insulation applied to prevent heat transmission to or from a piece of equipment that is part of a plumbing, heating or cooling system.

D. Jacket: Protective covering over insulation; may be factory applied such as "all service jacket" or field applied to provide additional protection; of such materials as canvas, polyvinyl chloride (PVC), aluminum or stainless steel.

E. Vapor Retarder Jacket: Insulation jacket material which impedes the transmission of water vapor.

F. Insert: Spacer placed between the equipment support system and the equipment to allow for the space required for insulation.

G. Insulation Shield: Buffer material placed between the equipment support system and the insulation to prevent the insulation material from crushing.

### 1.3 CODES AND STANDARDS

A. American Society for Testing and Materials (ASTM)

1. ASTM A167 - Standard Specification for Stainless and Heat-Resisting Chromium-Nickel Steel Plate, Sheet, and Strip.
2. ASTM B209 - Standard Specification for Aluminum and Aluminum-Alloy Sheet and Plate (ASTM B209M - Standard Specification for Aluminum and Aluminum-Alloy Sheet and Plate).

3. ASTM C177 - Standard Test Method for Steady-State Heat Flux Measurements and Thermal Transmission Properties by Means of the Guarded Hot Plate Apparatus.
4. ASTM C195 - Standard Specification for Mineral Fiber Thermal Insulating Cement.
5. ASTM C449/C449M - Standard Specification for Mineral Fiber Hydraulic-Setting Thermal Insulating and Finishing Cement.
6. ASTM C518 - Standard Test Method for Steady-State Heat Flux Measurements and Thermal Transmission Properties by Means of the Heat Flow Meter Apparatus.
7. ASTM C534 - Standard Specification for Preformed Flexible Elastomeric Cellular Thermal Insulation in Sheet and Tubular Form.
8. ASTM C547 - Standard Specification for Mineral Fiber Preformed Pipe Insulation.
9. ASTM C449 - Mineral Fiber Hydraulic-setting Thermal Insulating and Finishing Cement.
10. ASTM C553 - Mineral Fiber Blanket and Felt Insulation (Industrial Type).
11. ASTM C612 - Mineral Fiber Block and Board Thermal Insulation.
12. ASTM C795 - Standard Specification for Thermal Insulation for Use in Contact with Austenitic Stainless Steel.
13. ASTM C921 - Standard Practice for Determining the Properties of Jacketing Materials for Thermal Insulation.
14. ASTM D1784 - Standard Specification for Rigid Poly (Vinyl Chloride) (PVC) Compounds and Chlorinated Poly (Vinyl Chloride) (CPVC) Compounds.
15. ASTM E84 - Standard Test Method for Surface Burning Characteristics of Building Materials.
16. ASTM E96 - Standard Test Methods for Water Vapor Transmission of Materials.
17. Midwest Insulation Contractors Association (MICA) - Commercial and Industrial Insulation Standards.

B. American Society of Heating, Refrigerating and Air-Conditioning Engineers (ASHRAE)

1. ASHRAE Standard 90.1-1989 Energy Efficient Design of New Buildings Except New Low-Rise Residential Buildings.

C. National Fire Protection Association (NFPA)

1. NFPA 255 - Standard Method of Test of Surface Burning Characteristics of Building Materials.
2. NFPA-90A - Installation of Air Conditioning and Ventilation Systems.
3. NFPA-90B - Warm Air Heating and Air-Conditioning Systems.

D. National Insulation and Abatement Contractors Association (NIACA) - Guide to Insulation Product Specifications.

E. North American Insulation Manufacturers Association (NAIMA) National Insulation Standards.

F. Underwriters Laboratory (UL)

1. UL 723 - Standard for Test for Surface Burning Characteristics of Building Materials.

## 1.4 QUALITY ASSURANCE

A. Manufacturer: Company specializing in manufacturing the Products specified in this section with minimum five years documented experience.

B. Installer: Company specializing in performing the work of this section with minimum five years documented experience.

C. Products: Flame spread/smoke developed rating of 25/50 in accordance with ASTM E84 or NFPA 255 or UL 723.

D. No insulation product shall support or promote mold or fungus growth.

## 1.5 SUBMITTALS

A. Submit under provisions of Division 01.

B. Product Data: Provide a schedule, listing each type of insulation, thickness, density, type of protective covering, etc., and the work and service to which each type of insulation is to be applied. The schedule shall be submitted in quantities consistent with that required in the Conditions of the Contract. No insulation shall be purchased or installed until the schedule is reviewed by the Engineer.

C. Manufacturer's Installation Instructions: Indicate specific installation instructions per the manufacturers of the various products and indicate how the system (combination of products) will be assembled. Highlight critical environmental factors such as drying time, etc., as well as any variations between the manufacturer's installation instructions and the specified installation instructions along with a reason for the difference.

D. Manufacturer's Certificate: Certify that products meet or exceed specified requirements.

## 1.6 DELIVERY, STORAGE AND HANDLING

A. Deliver products to site under provisions of Division 01.

B. Deliver products to site in containers with manufacturer's stamp or label affixed showing fire hazard indexes of products.

C. Protect products against dirt, water, chemical and mechanical damage before, during and after installation. Do not install damaged or wet insulation; remove from project site. Damage to products prior to final acceptance of the Work shall be repaired or replaced at no additional cost to Owner.

D. Where existing insulation has been removed or disturbed, due to new connections and/or alterations, repair and replace existing insulation using materials that match existing, except where existing insulation includes asbestos material.

E. Existing insulation containing asbestos materials (or thought to contain asbestos materials) must be removed by Owner, either totally or in part, in strict accordance with OSHA Regulations utilizing OSHA approved Contractors. Repair and/or replacement of existing insulation containing asbestos shall be with new products as specified herein.

F. Maintain ambient conditions required by the manufacturer of each product.

## 1.7 SPARE PARTS

A. Six rolls of tape to be used for sealing penetrations in vapor retarder jackets.

## 1.8 WARRANTY

A. One year warranty on products and complete installation commencing at the time of Substantial Completion.

## 1.9 MAINTENANCE

Not Applicable

# PART 2 - PRODUCTS

## 2.1 INSULATION

A. Acceptable Manufacturers

1. Johns Manville
2. Owens-Corning
3. Knauf
4. Armstrong
5. Certainteed Corp.
6. Rock Wool Manufacturing

B. Type GFP: *Glass fiber pipe* insulation; ANSI/ASTM C547, rigid molded, for use to 850F; thermal conductivity ('k' value) of 0.23 (Btu)/(hr ft$^2$ EF) at 75°F mean temperature, k=0.29 at 200°F, k=0.43 at 400°F; noncombustible factory-applied white kraft paper bonded to aluminum foil and reinforced with glass fibers (ASJ) (vapor permeability shall not exceed .02 perms) that has a self-sealing longitudinal lap which provides positive closure without the use of tools, staples, adhesives, ties or tape at ambient temperatures between 25°F and 110°F shall be provided as a vapor retarder.

C. Type GFFB: *Glass fiber flexible blanket* insulation; ASTM C553; for use to 250°F; 'k' value of .28 at 75°F mean temperature; commercial grade; ¾ lb/cu ft minimum density; noncombustible factory-applied foil-scrim kraft (FSK) jacket (vapor permeability shall not exceed .02 perms).

D. Type GFRB: *Glass fiber rigid board* insulation; ASTM C612; for use to 250°F; 'k' value of .28 at 75°F mean temperature Class 2; 3 lb/cu ft minimum density; noncombustible factory-applied foil-scrim kraft (FSK) jacket (vapor permeability shall not exceed .02 perms).

E. Type MFP: *Mineral fiber pipe* insulation; ASTM C-612-83/ASTM E-136, Federal HH-1-558B; rigid molded; 10 lb/cu ft minimum density, surface temperature not to exceed 105°F; foil scrim kraft jacket (FSK). OR all service jacket (ASJ).

F. Type MFFB: *Mineral fiber flexible blanket* insulation; ASTM C-553/ASTM E-136, Federal HH-1-558B; 6 lb/cu ft minimum density, R-value/inch of 4.2, surface temperature not to exceed 105°F; foil scrim kraft jacket (FSK). OR all service jacket (ASJ).

G. Type MFRB: *Mineral fiber rigid board* insulation; ASTM C-612-83/ASTM E-136, Federal HH-I-558B, 6 lb/cu ft minimum density, surface temperature not to exceed 105°F; foil scrim kraft jacket (FSK). OR all service jacket (ASJ).

H. Type FEP: *Flexible elastomeric plastic* insulation; ANSI/ASTM C534; 'k' value of 0.27 at 75°F mean temperature.

## 2.2 PIPE PROTECTIVE COVERINGS

A. Acceptable Manufacturers

1. Childers (metal)
2. Knauf (metal)
3. Schuller International, Inc. (PVC)
4. Proto (PVC)

B. Interior Applications

1. Vapor Retarder Jackets: Integral to glass fiber insulation as specified above.
2. PVC Jackets: One piece pre-molded high impact PVC fitting covers with fiberglass inserts and accessories, to include elbows, tee/valves, end caps, mechanical line couplings, specialty fittings, jacketing, tacks and PVC tape.
3. Glass Fabric and Mastic: Two coats mastic required with 10 x 10 glass fabric.

C. Exterior Applications

1. Aluminum Jackets: ASTM B209; 0.016" thick; stucco embossed.
2. Stainless Steel Jackets: Type 304 stainless steel; 0.010" thick; smooth finish.
3. Glass Fabric and Mastic: Two coats mastic required with 10 x 10 glass fabric.

**2.3 PIPE ACCESSORIES**

A. Acceptable Manufacturers

1. Foster
2. Minnesota Mining
3. Chicago Mastic

B. Insulating Cement: ANSI/ASTM C195; hydraulic setting mineral wool; compatible with the insulation and protective coverings.

C. Finishing Cement: ASTM C449; compatible with the insulation/fitting covers/jackets.

D. Adhesives and Tapes: Compatible with insulation and protective coverings.

E. Metal Jacket Bands: ½" wide; 0.016" thick aluminum.

**PART 3 - EXECUTION**

**3.1 EXAMINATION**

A. Install products only after piping, ductwork and equipment have been tested and approved.

B. Verify that surfaces are clean and dry with any and all foreign material removed.

C. Provide drop cloths or other means of protecting all equipment from drops, spattering, etc. which may be caused by the application of insulating products.

**3.2 INSTALLATION**

A. Install products in accordance with manufacturer's and NAIMA instructions.

B. Whenever insulated pipes or ducts pass through sleeves or openings, the full specified thickness of the insulation shall pass through the sleeve or opening, except for sleeves located in fire rated partitions or floors. Space between pipe and sleeve located in fire rated partition or floor shall be sealed.

C. Contractor shall note that all adhesives shall be applied as specified, in continuous bands for complete coverage. The "spot" application of adhesives is not permitted.

D. Neatly finish insulation at supports, protrusions and interruptions.

E. Contractor shall coordinate with support and firestopping requirements as noted elsewhere in the Contract Documents.

## 3.3 APPLICATION (PIPING)

A. Schedule

| INSULATION | OPERATING TYPE | OPERATING TEMP (°F) |
|---|---|---|
| Chilled Water and/or Glycol | GFP | |

B. Insulation thickness shall be as follows:

| Fluid Design Operating Temperature Range, F | Nominal Pipe Diameter (in.) | | | | |
|---|---|---|---|---|---|
| | < 1″ | 1″ to < 1½″ | 1½″ to < 4″ | 4″ to < 8″ | 8″ & up |
| Above 350° | 4.5 | 5.0 | 5.0 | 5.0 | 5.0 |
| 251°-350° | 3.0 | 4.0 | 4.5 | 4.5 | 4.5 |
| 201°-250° | 2.5 | 2.5 | 2.5 | 3.0 | 3.0 |
| 100°-200° | 1.5 | 1.5 | 2.0 | 2.0 | 2.0 |
| 40°-60° | 1.5 | 1.5 | 1.5 | 1.5 | 1.5 |
| Up to 39° | 1.5 | 1.5 | 2.0 | 2.0 | 2.0 |

1. Use maximum fluid temperature for those systems where fluid temperature is above ambient temperature, minimum fluid temperature for those systems where fluid temperature is below ambient temperature.
2. EXCEPTION: Insulation thickness for roof drains and storm water shall be 1″.

C. Indoor, Exposed Pipe

1. For pipe exposed in mechanical equipment rooms or in finished spaces, insulate pipe, fittings, joints, and valves the same as for concealed applications.
2. Locate insulation and cover seams in least visible locations on exposed piping systems.

D. Where multiple layers of pipe insulation are required, all longitudinal and circumferential joints shall be staggered.

E. Exterior Pipe

1. Insulate the same as for "Indoor, Concealed Pipe."
2. Cover pipe and fittings with aluminum jacket with seams located at 2 o'clock side of horizontal piping. Overlap jacket 90 degrees. Overlap jacket ends (do not butt together) along the length of the pipe (at least 3″) and secure jacket with aluminum bands.

F. Insulate all horizontal storm water piping as well as all vertical piping between roof drain body and the first length of vertical piping to first 90 degree elbow down. Insulate roof drain body and seal to roof slab.

G. Omit insulation on chrome-plated exposed piping (except for physically challenged fixtures).

## 3.4 APPLICATION (EQUIPMENT)

A. Insulation shall be omitted at all equipment name plates and/or data plates.

B. Do not insulate factory insulated equipment.

C. Apply insulation as close as possible to equipment by grooving, scoring and beveling insulation, if necessary. Secure insulation to equipment with studs, pins, clips, adhesive, wires, or bands.

D. Fill joints, cracks, seams and depressions with bedding compound to form smooth surface. On cold equipment, use vapor retarder cement.

E. When equipment with insulation requires periodical opening for maintenance, repair, or cleaning, install insulation in such a manner that it can be easily removed and replaced without damage.

F. Insulate cold tanks and cold heat exchangers, with 1½" thick insulation (Type FEP).

1. Apply a coat of Foster No. 82-31 adhesive to all surfaces to be covered and all surfaces and edges of the insulation. Press edges into place and then press or roll rest of insulation into place. Finish by sealing all joints with appropriate insulating cement.
2. After insulation has been installed, apply two coats of white vinyl lacquer finish.
3. Plate heat exchangers: only insulate fixed end plates and exterior side of splash guards. Do not insulate interior side of splash guards.
4. Insulate the following:

a. Chemical Pot Feeders

**3.5 ADJUSTING**

Not Applicable

**3.6 CLEANING**

A. All empty cartons, containers, etc. which have contained insulating materials shall be removed from the site and premises by the Contractor as soon as possible after their contents have been removed.

END OF SECTION

P:\13 PROJECTS\P13-0334-00MCHENRY\04 DESIGN\11 SPECS\CONSTRUCTION SPECS\20 0700-THERMAL INSULATION FOR M-P-FP.DOCX

**SECTION 20 2923**
**VARIABLE FREQUENCY DRIVES FOR MECHANICAL, PLUMBING, AND FIRE SUPPRESSION**

## PART 1 - GENERAL

### 1.1 SCOPE OF WORK

A. This Section includes solid-state, PWM, VFDs with bypass for speed control of three-phase, squirrel-cage induction motors specifically applicable to Divisions 20, 21, 22, and 23 for mechanical, plumbing, and fire suppression systems (variable torque).

### 1.2 DEFINITIONS

A. BMS: Building management system

B. IGBT: Integrated gate bipolar transistor

C. LAN: Local area network

D. PID: Control action, proportional plus integral plus derivative

E. PWM: Pulse-width modulated

F. VFD: Variable frequency drive

### 1.3 CODES AND STANDARDS

A. The publications listed below form a part of this specification to the extent referenced. The publications are referred to in the text by the basic designation only. The edition/revision of the referenced publications shall be the latest date as of the date of the Contract Documents, unless otherwise specified.

1. NEMA ICS 3.1 – Safety Standards for Construction and Guide for Selection, Installation, and Operation of Variable Frequency Drive Systems.
2. NEMA 250 – Enclosures for Electrical Equipment (1000 Volts Maximum)
3. UL Approved
4. IEEE Standard 444 (ANSI-C343)
5. IEEE Standard 519
6. IEC: 146A
7. US 508C (Power Conversion)
8. CSA 22.2 No. 14095 (Industrial Control Equipment)
9. IEC 529
10. FCC CFR 47 Part 15 Subpart B

### 1.4 QUALITY ASSURANCE

A. Manufacturer Qualifications: Maintain, within 100 miles (160 km) of project site, a service center capable of providing training, parts, and emergency maintenance and repairs.

B. Testing Agency Qualifications: An independent testing agency, acceptable to authorities having jurisdiction, with the experience and capability to conduct the testing indicated; NETA member.

C. Source Limitations: Obtain VFDs of a single type through one source from a single manufacturer.

D. Electrical Components, Devices, and Accessories: Listed and labeled as defined in NFPA 70, Article 100, by a testing agency acceptable to authorities having jurisdiction, and marked for intended use.

E. Product Selection for Restricted Space: Drawings indicate maximum dimensions for VFDs, minimum clearances between VFDs, and adjacent surfaces and other items. Comply with indicated dimensions and clearances.

F. Comply with NFPA 70.

G. Minimum meantime between failure (MTBF) ratings of 25 years (219,000 hours).

**1.5 SUBMITTALS**

A. Product Data: For each type of VFD, provide dimensions; mounting arrangements; location for conduit entries; shipping and operating weights; and manufacturer's technical data on features, performance, electrical ratings, characteristics, and finishes.

B. Shop Drawings: For each VFD.

1. Include dimensioned plans, elevations, sections, and details, including required clearances and service space around equipment. Show tabulations of installed devices, equipment features, and ratings. Include the following:

a. Each installed unit's type and details
b. Nameplate legends
c. Short-circuit current ratings of integrated unit
d. Features, characteristics, ratings, and factory settings of each motor-control center unit

2. Wiring Diagrams: Power, signal, and control wiring for VFD. Provide schematic wiring diagram for each type of VFD.

C. Coordination Drawings: Floor plans showing dimensioned layout, required working clearances, and required area above and around VFDs where pipe and ducts are prohibited. Show VFD layout and relationships between electrical components and adjacent structural and mechanical elements. Show support locations, type of support, and weight on each support. Indicate field measurements.

D. Manufacturer Seismic Qualification Certification: Where project site is located in a seismic zone, submit certification that VFDs, accessories, and components will withstand seismic forces appropriate to the zone indicated.

E. Qualification Data: For testing agency and manufacturer.

F. Field Test Reports: Written reports specified in Part 3.

G. Manufacturer's field service report.

H. Operation and Maintenance Data: For VFDs, all installed devices, and components to include in emergency, operation, and maintenance manuals. In addition to items specified in Division 01 Section 01 7823, "Operation and Maintenance Data," include the following:

1. Routine maintenance requirements for VFDs and all installed components.
2. Manufacturer's written instructions for testing and adjusting overcurrent protective devices.

I. Load-Current and List of Settings of Adjustable Overload Relays: Compile after motors have been installed and arrange to demonstrate that dip switch settings for motor running overload protection suit actual motor to be protected.

J. Harmonic Analysis: The VFD manufacturer shall provide a harmonic analysis for this particular project from the drive to the point of common coupling (PCC) identified by the

engineer. If no PCC is identified by the engineer, then the PCC shall be defined as follows:

1. New Facilities: The PCC shall be the utility service, and if available, the generator (two studies). The engineer will furnish a one-line diagram and panel schedules for the VFD manufacturer to complete the study.
2. Retrofit or Replacement (existing facilities): The PCC shall be the first panel upstream feeding the drive. The contractor will provide information on the electrical system up to the panel.
3. The analysis shall include harmonic voltage and current distortion for compliance with IEEE 519. The VFD manufacturer shall be required to provide additional filters as needed to comply with IEEE 519. In no case shall the compliance with IEEE 519 be used to reduce requirements of the VFD as specified herein.

**1.6 DELIVERY, STORAGE, AND HANDLING**

A. Store VFDs indoors in clean, dry space with uniform temperature to prevent condensation. Protect VFDs from exposure to dirt, fumes, water, corrosive substances, and physical damage.

B. If stored in areas subject to weather, cover VFDs to protect them from weather, dirt, dust, corrosive substances, and physical damage. Remove loose packing and flammable materials from inside controllers; install electric heating of sufficient wattage to prevent condensation.

**1.7 SPARE PARTS**

A. Furnish extra materials described below that match products installed and that are packaged with protective covering for storage and identified with labels describing contents.

1. Spare Fuses: Furnish one set of three (3) spare fuses.
2. Logic Board, Keypad, and Power Supply Board: One of each.

**1.8 WARRANTY**

A. Warranty shall be 24 months from the date of certified start-up. The warranty shall include all parts, labor, travel, and expenses.

**1.9 MAINTENANCE**

A. Cooperative with the Owner during testing, adjusting, and balancing (TAB), phase of construction, to minimize conflicts.

**PART 2 - PRODUCTS**

**2.1 MANUFACTURERS**

A. Manufacturers and Products: Subject to compliance with specified requirements, provide products from a single manufacturer from the following:

1. VFDs 75 HP and less (6-pulse):
   a. ABB ACH550
   b. Schneider Electric S-Flex (BASIS OF DESIGN)
   c. Yaskawa Z1000

## 2.2 VARIABLE FREQUENCY DRIVES

A. Description: NEMA ICS 2, IGBT, PWM, VFD; listed and labeled as a complete unit and arranged to provide variable speed of a standard NEMA MG 1, Parts 30 and 31, three-phase, induction motor by adjusting output voltage and frequency.

B. PWM Design:

1. For motors 75 HP and less, the drive shall use a minimum of six-pulse PWM technology.

C. Design and Rating: Match load type such as fans, blowers, and pumps; and type of connection used between motor and load such as direct or through a power transmission connection.

D. Output Frequency Rating: Three-phase; 0 to 120 Hz.

E. Unit Operating Requirements

1. Input AC voltage tolerance of ±10% of voltage rating shown on plans
2. Input frequency tolerance of 60 Hz, ±5 Hz
3. Capable of driving full load, under the following conditions, without derating:
   a. Ambient Temperature: 14°F to 104°F
   b. Humidity: Less than 95% (non-condensing)
   c. Altitude: 3,300 feet (1,000 m); higher altitudes achieved by derating
4. Minimum Efficiency: 96% at half speed; 98% at full speed
5. Minimum Displacement Primary-Side Power Factor: 98%
6. Overload Capability (variable torque): 110% the rated full load current for 60 seconds, 180% of rated full load current
7. Starting Torque: 100% of rated torque or as indicated
8. Speed Regulation: ±3%
9. Isolated control interface to allow controller to follow control signal over an 11:1 speed range

F. Internal Adjustability Capabilities

1. Minimum Speed: 5 to 25% of maximum rpm
2. Maximum Speed: 80 to 100% of maximum rpm
3. Acceleration: Adjustable from 0 to 6,000 seconds
4. Deceleration: Adjustable from 0 to 6,000 seconds
5. Current Limit: 50% to a minimum of 110% of maximum rating

G. Self-Protection and Reliability Features

1. Input transient protection by means of surge suppressors
2. Under- and over-voltage trips; inverter over-temperature, overload, and overcurrent trips
3. Adjustable Motor Overload Relay, Class 20
4. Instantaneous line-to-line and line-to-ground overcurrent trips
5. Loss-of-phase protection
6. Reverse-phase protection
7. Short-circuit protection
8. Motor over-temperature fault
9. Dynamic braking

H. Automatic Reset and Restart: To attempt three restarts after controller fault or on return of power after an interruption and before shutting down for manual reset or fault correction. Bi-directional autospeed search shall be capable of starting into rotating loads spinning in either direction and returning motor to set speed in proper direction, without damage to controller, motor, or load.

I. Power-Interruption Protection: To prevent motor from re-energizing after a power interruption until motor has stopped.

J. Torque Boost: Automatically vary starting and continuous torque to at least 1.5 times the minimum torque to insure high-starting torque and increased torque at slow speeds.

K. Input Line Conditioning: All VFDs 20 hp and larger shall be provided with a 3% (2½% acceptable) input line reactor.

L. Output Line Conditioning: Where motor feeder exceeds 100 feet, manufacturer shall confirm requirements for an output line reactor or provide dv/dt filter to avoid damage to motor.

M. Status Pilot Lights: Door-mounted lights indicators shall indicate the following conditions:

1. Power on
2. Run
3. Bypass
4. Fault

N. Panel-Mounted Operator Station: Start-stop and auto-manual selector switches with manual speed control potentiometer and elapsed time meter.

O. Digital Display: The VFD shall provide a LCD display capable of displaying multiple lines of text on the VFD's operating values. The following are to be available at a minimum:

1. Output frequency (Hz)
2. Motor speed (rpm)
3. Motor status (running, stop, fault)
4. Motor current (amperes)
5. Motor torque (percent)
6. Fault or alarming status (code)
7. Motor Power (kW)
8. kWh meter
9. DC-link voltage (VDC)
10. Set-point frequency (Hz)
11. Motor output voltage (V)
12. Analog Input Values
13. Analog Output Values
14. Digital Input Status
15. Digital Output Status

P. Control Signal Interface: Provide VFD with the following:

1. Electric Input Signal Interface: A minimum of two analog inputs (0 to 10 V or 0/4-20 mA) and six programmable digital inputs.
2. Pneumatic Input Signal Interface: Contractor shall provide transducer to provide 4-20 mA signal where VFD is to be applied in systems with pneumatic controls.

3. Remote Signal Inputs: Capability to accept any of the following speed-setting input signals from the BMS or other control systems:

   a. 0 to 10-VDC
   b. 4-20 mA
   c. Potentiometer using up/down digital inputs
   d. Fixed frequencies using digital inputs
   e. RS485 & RS232
   f. Keypad display for local hand operation

4. Output Signal Interface:

   a. A minimum of one analog output signal (0/4-20 mA), which can be programmed to any of the following:

      (1) Output frequency (Hz)
      (2) Output current (load)
      (3) DC-link voltage (VDC)
      (4) Motor torque (percent)
      (5) Motor power
      (6) Motor voltage
      (7) Motor speed (rpm)

   b. A minimum of two programmable dry circuit relay outputs (Form C, 120VAC, 2 amp) for remote indication of the following:

      (1) Motor running
      (2) Ready
      (3) At speed
      (4) Jogging
      (5) Fault
      (6) Over-temperature

5. Control Transformer: Provide 120VAC control transformer to allow VFD to interface with remote dry contacts.

Q. Communications: Communications interface shall allow all parameter settings of VFD to be programmed via BMS control. Provide capability for VFD to retain these settings within the nonvolatile memory. VFD shall have one of the following communications capabilities and protocols that are compatible with the building automation system:

   1. BACnet

R. Three-Contactor Bypass: Three-contactor bypass shall include a drive input disconnect, a VFD input isolation contactor (or isolation switch), bypass contactor, and an VFD output contactor that is electrically and mechanically interlocked with a bypass contactor. This circuit shall include control logic, optional status lights, and Class 20 motor overcurrent protection. The unit may be set up for manual or automatic bypass operation upon a VFD trip. The bypass shall include a NEMA ICS 2, full voltage, non-reversing enclosed controller with across-the-line starting capability in manual-bypass mode. Provide motor overload protection under both modes of operation with control logic that allows common start-stop capability in either mode.

S. Integral Disconnecting Means: Provide a NEMA instantaneous-trip circuit breaker to provide disconnecting means and protection during bypass. The handle position shall

indicate on, off, and tripped. The disconnect handle shall be able to be padlocked in the off position.

T. The VFD must meet the requirements for Radio Frequency Interference (RFI) above 7 MHz as specified by FCC regulations, part 15, subpart J, Class A devices.

**2.3 ENCLOSURES**

A. For Indoor Applications: All standard and optional features shall be housed in a single NEMA 1 plenum-rated enclosure with a U.L. Certification label.

**2.4 ACCESSORIES**

A. Devices shall be factory installed in controller enclosure, unless otherwise indicated.

B. Push-Button Stations, Pilot Lights, and Selector Switches: NEMA ICS 2, heavy-duty type.

C. Stop and Lockout Push-Button Station: Momentary-break, push-button station with a factory-applied hasp arranged so padlock can be used to lock push button in depressed position with control circuit open.

D. Control Relays: Auxiliary and adjustable time-delay relays.

E. Standard Displays

1. Output frequency (Hz)
2. Set-point frequency (Hz)
3. Motor current (amperes)
4. DC-link voltage (VDC)
5. Motor torque (percent)
6. Motor speed (rpm)
7. Motor output voltage (V)

F. Historical Logging Information and Displays

1. Real-time clock with current time and date
2. Running log of total power versus time
3. Total run time
4. Fault log, maintaining last four faults with time and date stamp for each

G. Current-Sensing, Phase-Failure Relays for Bypass Controller: Solid-state sensing circuit with isolated output contacts for hard-wired connection; arranged to operate on phase failure, phase reversal, current unbalance of from 30 to 40%, or loss of supply voltage; with adjustable response delay.

**2.5 FACTORY FINISHES**

A. Manufacturer's standard prime-coat finish ready for field painting.

B. Finish: Manufacturer's standard paint applied to factory-assembled and factory-tested VFDs before shipping.

## PART 3 - EXECUTION

**3.1 EXAMINATION**

A. Examine areas, surfaces, and substrates to receive VFDs for compliance with requirements, installation tolerances, and other conditions affecting performance.

B. Examine roughing-in for conduit systems to verify actual locations of conduit and motor connection points before VFD installation.

C. Proceed with installation only after unsatisfactory conditions have been corrected.

**3.2 APPLICATIONS**

A. Select features of each VFD to coordinate with ratings and characteristics of supply circuit and motor; required control sequence; and duty cycle of motor, drive, and load.

B. Select rating of controllers to suit motor controlled.

C. Motors intended for use with variable frequency drives shall be rated for inverter duty. (Motors are furnished and installed by mechanical or plumbing contractor, wired by electrical contractor.)

**3.3 INSTALLATION**

A. Anchor each VFD assembly to steel-channel sills arranged and sized according to manufacturer's written instructions. Attach by bolting. Level and grout sills flush with VFD mounting surface.

B. Install VFDs on concrete bases, where applicable, complying with Division 26 Section 26 0505, "Basic Electrical Materials and Methods."

C. Coordinate layout and installation of VFDs with other construction including conduit, piping, equipment, and adjacent surfaces. Maintain required workspace clearances and required clearances for equipment access doors and panels.

D. Coordinate size and location of concrete bases where required. Cast anchor-bolt inserts directly into bases.

E. Where the VFD is mounted above the roof line, coordinate installation of roof curbs, equipment supports, and roof penetrations.

F. Coordinate features of VFDs, installed units, and accessory devices with pilot devices and control circuits to which they connect.

G. Coordinate features, accessories, and functions of each VFD and each installed unit with ratings and characteristics of supply circuit, motor, required control sequence, and duty cycle of motor and load.

**3.4 IDENTIFICATION**

A. Identify VFDs, components, and control wiring according to Division 26 Section 26 0505, "Basic Electrical Materials and Methods."

B. Operating Instructions: Frame printed operating instructions for VFDs, including control sequences and emergency procedures. Fabricate frame of finished metal, and cover instructions with clear acrylic plastic. Mount on front of VFD units.

**3.5 CONTROL WIRING INSTALLATION**

A. Install wiring between VFDs and remote devices according to Division 26 Section 26 0505, "Basic Electrical Materials and Methods."

B. Bundle, train, and support wiring in enclosures.

C. Connect selector switch and other automatic-control devices where available.

1. Connect selector switches to bypass only those manual- and automatic-control devices that have no safety functions when switches are in hand position.

2. Connect selector switches with control circuit in both hand and automatic positions for safety-type control devices such as low-pressure and high-pressure cutouts, high-temperature cutouts, and motor overload protectors.

**3.6 CONNECTIONS**

A. Conduit installation requirements are specified in other Division 26 Sections. Drawings indicate general arrangement of conduit, fittings, and specialties.

B. Ground equipment per the latest edition of NFPA 70 (NEC).

C. Tighten electrical connectors and terminals according to manufacturer's published torque-tightening values. If manufacturer's torque values are not indicated, use those specified in UL 486A and UL 486B.

**3.7 FIELD QUALITY CONTROL**

A. Prepare for acceptance tests as follows:

1. Test insulation resistance for each VFD element, bus, component, connecting supply, feeder, and control circuit.
2. Test continuity of each circuit.

B. Testing: Owner will engage a qualified testing agency to perform the following field quality-control testing:

1. Perform each electrical test and visual and mechanical inspection stated in NETA ATS, Sections 7.5, 7.6, and 7.16. Certify compliance with test parameters.

C. This contractor shall perform the following functions:

1. Correct malfunctioning units on-site, where possible, and retest to demonstrate compliance; otherwise, replace with new units and reset.

D. Manufacturer's Field Service: Electrical contractor shall engage a factory-authorized service representative to inspect field assembled components and equipment installation, including pretesting and adjusting VFDs.

E. Test Reports: Prepare a written report to record the following:

1. Test procedures used
2. Test results that comply with requirements
3. Test results that do not comply with requirements and corrective action taken to achieve compliance with requirements

**3.8 START-UP SERVICE**

A. Engage a factory-authorized service representative to perform start-up service.

B. Verify that electrical wiring installation complies with manufacturer's submittal and installation requirements in Division 26 Sections.

C. Complete installation and start-up checks according to manufacturer's written instructions.

**3.9 ADJUSTING**

A. Set field-adjustable switches and circuit-breaker trip ranges.

**3.10 CLEANING**

A. Clean VFDs internally, on completion of installation, according to manufacturer's written instructions. Vacuum dirt and debris; do not use compressed air to assist in cleaning.

## 3.11 DEMONSTRATION

A. Engage a factory-authorized service representative to train Owner's maintenance personnel to adjust, operate, and maintain VFDs.

END OF SECTION

P:\13 PROJECTS\P13-0334-00MCHENRY\04 DESIGN\11 SPECS\CONSTRUCTION SPECS\20 2923-VARIABLE FREQUENCY DRIVES FOR M-P-FP.DOCX

# SECTION 23 0100
# COMMON WORK REQUIREMENTS FOR MECHANICAL

## PART 1 - GENERAL

### 1.1 SECTION INCLUDES

A. Basic requirements applicable to all Division 23 work.

### 1.2 RELATED SECTIONS

A. All specification sections in Division 20 are applicable to Division 23. It is the responsibility of the Division 23 Contractor to obtain all Division 20 specifications and conform to all applicable requirements. Division 20 Sections included are:

1. Section 20 0500: Basic Requirements for Mechanical, Plumbing, and Fire Suppression
2. Section 20 0501: Minor Mechanical, Plumbing, and Fire Suppression Demolition
3. Section 20 0513: Motor Requirements for Mechanical, Plumbing, and Fire Suppression Equipment
4. Section 20 0519: Meters And Gauges for Mechanical, Plumbing, and Fire Suppression
5. Section 20 0700: Thermal Insulation for Mechanical, Plumbing, and Fire Suppression
6. Section 20 2923: Variable Frequency Drives for Mechanical, Plumbing, and Fire Suppression

## PART 2 - PRODUCTS

Not Applicable

## PART 3 - EXECUTION

### 3.1 SCOPE

A. Work included under Divisions 20 and 23 shall include all labor, services, materials, and equipment and performance of all work required for installation of plumbing systems as shown on Drawings and as specified.

END OF SECTION

P:\13 PROJECTS\P13-0334-00MCHENRY\04 DESIGN\11 SPECS\CONSTRUCTION SPECS\23 0100-COMMON WORK REQUIREMENTS FOR MECHANICAL.DOCX

**SECTION 23 0593**
**TESTING, ADJUSTING, AND BALANCING FOR HVAC**

## PART 1 - GENERAL

### 1.1 SCOPE OF WORK

A. This Section includes testing, adjusting, and balancing to produce design objectives for the following:

1. Hydronic Piping Systems:
   a. Variable-flow systems
2. HVAC equipment quantitative-performance settings
3. Verifying that automatic control devices are functioning properly
4. Reporting results of activities and procedures specified in this Section

### 1.2 DEFINITIONS

A. Adjust: To regulate fluid flow rate and air patterns at the terminal equipment, such as to reduce fan speed or adjust a damper.

B. Balance: To proportion flows within the distribution system, including submains, branches, and terminals, according to indicated quantities.

C. Barrier or Boundary: Construction, either vertical or horizontal, such as walls, floors, and ceilings that are designed and constructed to restrict the movement of airflow, smoke, odors, and other pollutants.

D. Draft: A current of air, when referring to localized effect caused by one or more factors of high air velocity, low ambient temperature, or direction of airflow, whereby more heat is withdrawn from a person's skin than is normally dissipated.

E. NC: Noise criteria.

F. Procedure: An approach to and execution of a sequence of work operations to yield repeatable results.

G. RC: Room criteria.

H. Report Forms: Test data sheets for recording test data in logical order.

I. Smoke-Control System: An engineered system that uses fans to produce airflow and pressure differences across barriers to limit smoke movement.

J. Smoke-Control Zone: A space within a building that is enclosed by smoke barriers and is a part of a zoned smoke-control system.

K. Stair Pressurization System: A type of smoke-control system that is intended to positively pressurize stair towers with outdoor air by using fans to keep smoke from contaminating the stair towers during an alarm condition.

L. Static Head: The pressure due to the weight of the fluid above the point of measurement. In a closed system, static head is equal on both sides of the pump.

M. Suction Head: The height of fluid surface above the centerline of the pump on the suction side.

N. System Effect: A phenomenon that can create undesired or unpredicted conditions that cause reduced capacities in all or part of a system.

O. System Effect Factors: Allowances used to calculate a reduction of the performance ratings of a fan when installed under conditions different from those presented when the fan was performance tested.

P. TAB: Testing, adjusting, and balancing.

Q. Terminal: A point where the controlled medium, such as fluid or energy, enters or leaves the distribution system.

R. Test: A procedure to determine quantitative performance of systems or equipment.

S. Testing, Adjusting, and Balancing Firm: The entity responsible for performing and reporting TAB procedures.

**1.3 SUBMITTALS**

A. Qualification Data: Within 30 days from Contractor's Notice to Proceed, submit evidence that TAB firm and this Project's TAB team members meet the qualifications specified in "Quality Assurance" Article.

B. Contract Documents Examination Report: Within 30 days from Contractor's Notice to Proceed, submit the Contract Documents review report as specified in Part 3.

C. Strategies and Procedures Plan: Within 60 days from Contractor's Notice to Proceed, submit TAB strategies and step-by-step procedures as specified in Part 3 "Preparation" Article. Include a complete set of report forms intended for use on this Project.

D. Certified TAB Reports: Submit two copies of reports prepared, as specified in this Section, on approved forms certified by TAB firm.

E. Warranties specified in this Section.

**1.4 QUALITY ASSURANCE**

A. TAB Firm Qualifications: Engage a TAB firm certified by AABC, NEBB, or TABB.

B. TAB Conference: Meet with Owner's and Architect's representatives on approval of TAB strategies and procedures plan to develop a mutual understanding of the details. Ensure the participation of TAB team members, equipment manufacturers' authorized service representatives, HVAC controls installers, and other support personnel. Provide seven (7) days' advance notice of scheduled meeting time and location.

1. Agenda Items: Include at least the following:

a. Submittal distribution requirements
b. The Contract Documents examination report
c. TAB plan
d. Work schedule and Project-site access requirements
e. Coordination and cooperation of trades and subcontractors
f. Coordination of documentation and communication flow

C. Certification of TAB Reports: Certify TAB field data reports. This certification includes the following:

1. Review field data reports to validate accuracy of data and to prepare certified TAB reports.
2. Certify that TAB team complied with approved TAB plan and the procedures specified and referenced in this Specification.

D. TAB Report Forms: Use standard forms from AABC, NEBB or TABB/SMACNA.

E. Instrumentation Type, Quantity, and Accuracy: As described in AABC's "National Standards for Total System Balance," NEBB's "Procedural Standards for Testing, Adjusting, and Balancing of Environmental Systems," Section II, "Required Instrumentation for NEBB Certification," or the TABB Instrument List.

F. Instrumentation Calibration: Calibrate instruments at least every six months or more frequently if required by instrument manufacturer.

1. Keep an updated record of instrument calibration that indicates date of calibration and the name of party performing instrument calibration.

**1.5 PROJECT CONDITIONS**

A. Full Owner Occupancy: Owner will occupy the site and existing building during entire TAB period. Cooperate with Owner during TAB operations to minimize conflicts with Owner's operations.

**1.6 COORDINATION**

A. Coordinate the efforts of factory-authorized service representatives for systems and equipment, HVAC controls installers, and other mechanics to operate HVAC systems and equipment to support and assist TAB activities.

B. Notice: Provide seven days' advance notice for each test. Include scheduled test dates and times.

C. Perform TAB after leakage and pressure tests on air and water distribution systems have been satisfactorily completed.

**1.7 WARRANTY**

A. Provide one of the following performance guarantees:

1. AABC National Project Performance Guarantee
2. NEBB Certificate of Conformance Certification
3. TABB Quality Assurance Program Guarantee

B. Guarantee shall include the following provisions:

1. The certified TAB firm has tested and balanced systems according to the Contract Documents.
2. Systems are balanced to optimum performance capabilities within design and installation limits.

**PART 2 - PRODUCTS**

**2.1 ACCEPTABLE FIRMS**

A. Aero Testing & Balancing Systems, Inc., Chicago, IL

B. Independent Testing and Balancing, Warrenville, IL

C. International Test and Balance, Inc., Des Plaines, IL

D. Superior Test and Balance, Inc., Algonquin, IL

E. Or other qualified independent contractor as approved by Engineer prior to bid.

## PART 3 - EXECUTION

### 3.1 EXAMINATION

A. Examine the Contract Documents to become familiar with Project requirements and to discover conditions in systems' designs that may preclude proper TAB of systems and equipment.

1. Contract Documents are defined in the General and Supplementary Conditions of Contract.
2. Verify that balancing devices, such as test ports, gage cocks, thermometer wells, flow-control devices, balancing valves and fittings, and manual volume dampers, are required by the Contract Documents. Verify that quantities and locations of these balancing devices are accessible and appropriate for effective balancing and for efficient system and equipment operation.

B. Examine approved submittal data of HVAC systems and equipment.

C. Examine Project Record Documents described in General Conditions and Division 01 Section 01 7700, "Project Closeout" and Division 20 Section 20 0500, "Basic Requirements for Mechanical, Plumbing, and Fire Protection.

D. Examine design data, including HVAC system descriptions, statements of design assumptions for environmental conditions and systems' output, and statements of philosophies and assumptions about HVAC system and equipment controls.

E. Examine equipment performance data including fan and pump curves. Relate performance data to Project conditions and requirements, including system effects that can create undesired or unpredicted conditions that cause reduced capacities in all or part of a system. Calculate system effect factors to reduce performance ratings of HVAC equipment when installed under conditions different from those presented when the equipment was performance tested at the factory. To calculate system effects for air systems, use tables and charts found in AMCA 201, "Fans and Systems," Sections 7 through 10; or in SMACNA's "HVAC Systems – Duct Design," Sections 5 and 6. Compare this data with the design data and installed conditions.

F. Examine system and equipment installations to verify that they are complete and that testing, cleaning, adjusting, and commissioning specified in individual Sections have been performed.

G. Examine system and equipment test reports.

H. Examine HVAC system and equipment installations to verify that indicated balancing devices, such as test ports, gage cocks, thermometer wells, flow-control devices, balancing valves and fittings, and manual volume dampers, are properly installed, and that their locations are accessible and appropriate for effective balancing and for efficient system and equipment operation.

I. Examine systems for functional deficiencies that cannot be corrected by adjusting and balancing.

J. Examine HVAC equipment to ensure that clean filters have been installed, bearings are greased, belts are aligned and tight, and equipment with functioning controls is ready for operation.

K. Examine strainers for clean screens and proper perforations.

L. Examine system pumps to ensure absence of entrained air in the suction piping.

M. Examine equipment for installation and for properly operating safety interlocks and controls.

N. Examine automatic temperature system components to verify the following:

1. Valves, and other controlled devices are operated by the intended controller.
2. Valves are in the position indicated by the controller.
3. Integrity of valves and dampers for free and full operation and for tightness of fully closed and fully open positions. This includes dampers in multizone units, mixing boxes, and variable-air-volume terminals.
4. Automatic modulating and shutoff valves, including two-way valves and three-way mixing and diverting valves, are properly connected.
5. Sensors are located to sense only the intended conditions.
6. Sequence of operation for control modes is according to the Contract Documents.
7. Controller set points are set at indicated values.
8. Interlocked systems are operating.

O. Report deficiencies discovered before and during performance of TAB procedures. Observe and record system reactions to changes in conditions. Record default set points if different from indicated values.

## 3.2 PREPARATION

A. Prepare a TAB plan that includes strategies and step-by-step procedures.

B. Complete system readiness checks and prepare system readiness reports. Verify the following:

1. Permanent electrical power wiring is complete.
2. Hydronic systems are filled, clean, and free of air.
3. Automatic temperature-control systems are operational.
4. Equipment and duct access doors are securely closed.
5. Balance, smoke, and fire dampers are open.
6. Isolating and balancing valves are open and control valves are operational.
7. Ceilings are installed in critical areas where air-pattern adjustments are required and access to balancing devices is provided.
8. Windows and doors can be closed so indicated conditions for system operations can be met.

## 3.3 GENERAL PROCEDURES FOR TESTING AND BALANCING

A. Perform testing and balancing procedures on each system according to the procedures contained in AABC's "National Standards for Total System Balance," NEBB's "Procedural Standards for Testing, Adjusting, and Balancing of Environmental Systems," or SMACNA's "HVAC Systems – Testing, Adjusting, and Balancing" and this Section.

B. Cut insulation, ducts, pipes, and equipment cabinets for installation of test probes to the minimum extent necessary to allow adequate performance of procedures. After testing and balancing, close probe holes and patch insulation with new materials identical to those removed. Restore vapor barrier and finish according to insulation Specifications for this Project.

C. Mark equipment and balancing device settings with paint or other suitable, permanent identification material, including damper-control positions, valve position indicators, fan-speed-control levers, and similar controls and devices, to show final settings.

D. Take and report testing and balancing measurements in inch-pound (IP) units.

## 3.4 GENERAL PROCEDURES FOR HYDRONIC SYSTEMS

A. Prepare test reports with pertinent design data and number in sequence starting at pump to end of system. Check the sum of branch-circuit flows against approved pump flow rate. Correct variations that exceed plus or minus 5 percent.

B. Prepare schematic diagrams of systems' "as-built" piping layouts.

C. Prepare hydronic systems for testing and balancing according to the following, in addition to the general preparation procedures specified above:

1. Open all manual valves for maximum flow.
2. Check expansion tank liquid level.
3. Check makeup-water-station pressure gage for adequate pressure for highest vent.
4. Check flow-control valves for specified sequence of operation and set at indicated flow.
5. Set differential-pressure control valves at the specified differential pressure. Do not set at fully closed position when pump is positive-displacement type unless several terminal valves are kept open.
6. Set system controls so automatic valves are wide open to heat exchangers.
7. Check pump-motor load. If motor is overloaded, throttle main flow-balancing device so motor nameplate rating is not exceeded.
8. Check air vents for a forceful liquid flow exiting from vents when manually operated.

## 3.5 PROCEDURES FOR MOTORS

A. Motors, ½ HP and Larger: Test at final balanced conditions and record the following data:

1. Manufacturer, model, and serial numbers.
2. Motor horsepower rating.
3. Motor rpm.
4. Efficiency rating.
5. Nameplate and measured voltage, each phase.
6. Nameplate and measured amperage, each phase.
7. Starter thermal-protection-element rating.

B. Motors Driven by Variable-Frequency Controllers: Test for proper operation at speeds varying from minimum to maximum. Test the manual bypass for the controller to prove proper operation. Record observations, including controller manufacturer, model and serial numbers, and nameplate data.

## 3.6 PROCEDURES FOR CHILLERS

A. Balance water flow through each evaporator and condenser to within specified tolerances of indicated flow with all pumps operating. With only one chiller operating in a multiple chiller installation, do not exceed the flow for the maximum tube velocity recommended by the chiller manufacturer. Measure and record the following data with each chiller operating at design conditions:

1. Evaporator-water entering and leaving temperatures, pressure drop, and water flow.
2. If water-cooled chillers, condenser-water entering and leaving temperatures, pressure drop, and water flow.

3. Evaporator and condenser refrigerant temperatures and pressures, using instruments furnished by chiller manufacturer.
4. Power factor if factory-installed instrumentation is furnished for measuring kilowatt.
5. Kilowatt input if factory-installed instrumentation is furnished for measuring kilowatt.
6. Capacity: Calculate in tons of cooling.
7. If air-cooled chillers, verify condenser fan rotation and record fan and motor data including number of fans and entering- and leaving-air temperatures.

**3.7 PROCEDURES FOR TEMPERATURE MEASUREMENTS**

A. During TAB, report the need for adjustment in temperature regulation within the automatic temperature-control system.

B. Measure indoor wet- and dry-bulb temperatures every other hour for a period of two successive eight-hour days, in each separately controlled zone, to prove correctness of final temperature settings. Measure when the building or zone is occupied.

C. Measure outside-air, wet- and dry-bulb temperatures.

**3.8 TEMPERATURE-CONTROL VERIFICATION**

A. Verify that controllers are calibrated and commissioned.

B. Check transmitter and controller locations and note conditions that would adversely affect control functions.

C. Record controller settings and note variances between set points and actual measurements.

D. Check the operation of limiting controllers (i.e., high- and low-temperature controllers).

E. Check free travel and proper operation of control devices such as damper and valve operators.

F. Check the sequence of operation of control devices. Note air pressures and device positions and correlate with airflow and water flow measurements. Note the speed of response to input changes.

G. Check the interaction of electrically operated switch transducers.

H. Check the interaction of interlock and lockout systems.

I. Check main control supply-air pressure and observe compressor and dryer operations.

J. Record voltages of power supply and controller output. Determine whether the system operates on a grounded or ungrounded power supply.

K. Note operation of electric actuators using spring return for proper fail-safe operations.

**3.9 TOLERANCES**

A. Adjust hydronic systems to ± 5% of design parameters.

**3.10 REPORTING**

A. Initial Construction-Phase Report: Based on examination of the Contract Documents as specified in "Examination" Article, prepare a report on the adequacy of design for systems' balancing devices. Recommend changes and additions to systems' balancing devices to facilitate proper performance measuring and balancing. Recommend changes

and additions to HVAC systems and general construction to allow access for performance measuring and balancing devices.

B. Status Reports: As Work progresses, prepare reports to describe completed procedures, procedures in progress, and scheduled procedures. Include a list of deficiencies and problems found in systems being tested and balanced. Prepare a separate report for each system and each building floor for systems serving multiple floors.

**3.11 FINAL REPORT**

A. General: Typewritten, or computer printout in letter-quality font, on standard bond paper, in three-ring binder, tabulated and divided into sections by tested and balanced systems.

B. Include a certification sheet in front of binder signed and sealed by the certified testing and balancing engineer.

1. Include a list of instruments used for procedures, along with proof of calibration.

C. Final Report Contents: In addition to certified field report data, include the following:

1. Pump curves
2. Manufacturers' test data
3. Field test reports prepared by system and equipment installers
4. Other information relative to equipment performance, but do not include Shop Drawings and Product Data

D. General Report Data: In addition to form titles and entries, include the following data in the final report, as applicable:

1. Title page
2. Name and address of TAB firm
3. Project name
4. Project location
5. Architect's name and address
6. Engineer's name and address
7. Contractor's name and address
8. Report date
9. Signature of TAB firm who certifies the report
10. Table of Contents with the total number of pages defined for each section of the report. Number each page in the report.
11. Summary of contents including the following:
    a. Indicated versus final performance
    b. Notable characteristics of systems
    c. Description of system operation sequence if it varies from the Contract Documents
12. Nomenclature sheets for each item of equipment.
13. Data for terminal units, including manufacturer, type size, and fittings.
14. Notes to explain why certain final data in the body of reports varies from indicated values.

E. Packaged Chiller Reports:

1. Unit Data:
    a. Unit identification

b. Make and model number
c. Manufacturer's serial number
d. Capacity in tons
e. Refrigerant type and capacity in lbs
f. Starter type and size
g. Starter thermal protection size
h. Compressor make and model number
i. Compressor manufacturer's serial number

2. Air-Cooled Condenser Test Data (Indicated and Actual Values):

a. Refrigerant pressure in psig
b. Refrigerant temperature in °F
c. Entering- and leaving-air temperature in °F
d. Number of compressors

3. Evaporator Test Reports (Indicated and Actual Values):

a. Refrigerant pressure in psig
b. Refrigerant temperature in °F
c. Entering-water temperature in °F
d. Leaving-water temperature in °F
e. Entering-water pressure in feet of head or psig
f. Water pressure differential in feet of head or psig
g. Water flow rate in gpm

4. Compressor Test Data (Indicated and Actual Values):

a. Suction pressure in psig
b. Suction temperature in °F
c. Discharge pressure in psig
d. Discharge temperature in °F
e. Oil pressure in psig
f. Oil temperature in °F
g. Voltage at each connection
h. Amperage for each phase
i. Kilowatt input
j. Crankcase heater kilowatt
k. Chilled-water control set point in °F
l. Condenser-water control set point in °F
m. Refrigerant low-pressure-cutoff set point in psig
n. Refrigerant high-pressure-cutoff set point in psig

5. Refrigerant Test Data (Indicated and Actual Values):

a. Oil level
b. Refrigerant level
c. Relief valve setting in psig
d. Unloader set points in psig
e. Percentage of cylinders unloaded
f. Bearing temperatures in °F
g. Vane position
h. Low-temperature-cutoff set point in °F

F. Pump Test Reports: Calculate impeller size by plotting the shutoff head on pump curves and include the following:

1. Unit Data:

   a. Unit identification
   b. Location
   c. Service
   d. Make and size
   e. Model and serial numbers
   f. Water flow rate in gpm
   g. Water pressure differential in feet of head or psig
   h. Required net positive suction head in feet of head or psig
   i. Pump rpm
   j. Impeller diameter in inches
   k. Motor make and frame size
   l. Motor horsepower and rpm
   m. Voltage at each connection
   n. Amperage for each phase
   o. Full-load amperage and service factor
   p. Seal type

2. Test Data (Indicated and Actual Values):

   a. Static head in feet of head or psig
   b. Pump shutoff discharge, suction and total pressures in feet of head or psig
   c. Actual impeller size in inches
   d. Full-open flow rate in gpm
   e. Full-open pressure in feet of head or psig
   f. Final discharge pressure in feet of head or psig
   g. Final suction pressure in feet of head or psig
   h. Final total pressure in feet of head or psig
   i. Final water flow rate in gpm
   j. Voltage at each connection
   k. Amperage for each phase

**3.12 INSPECTIONS**

A. Initial Inspection:

1. After testing and balancing are complete, operate each system and randomly check measurements to verify that the system is operating according to the final test and balance readings documented in the Final Report.
2. Randomly check the following for each system:

   a. Verify that balancing devices are marked with final balance position.
   b. Note deviations to the Contract Documents in the Final Report.

B. Final Inspection:

1. After initial inspection is complete and evidence by random checks verifies that testing and balancing are complete and accurately documented in the final report, request that a final inspection be made by Owner.

2. TAB firm test and balance engineer shall conduct the inspection in the presence of Owner.
3. Owner shall randomly select measurements documented in the final report to be rechecked. The rechecking shall be limited to either 10 percent of the total measurements recorded, or the extent of measurements that can be accomplished in a normal 8-hour business day.
4. If the rechecks yield measurements that differ from the measurements documented in the final report by more than the tolerances allowed, the measurements shall be noted as "FAILED."
5. If the number of "FAILED" measurements is greater than 10 percent of the total measurements checked during the final inspection, the testing and balancing shall be considered incomplete and shall be rejected.
6. TAB firm shall recheck all measurements and make adjustments. Revise the final report and balancing device settings to include all changes and resubmit the final report.
7. Request a second final inspection. If the second final inspection also fails, Owner shall contract the services of another TAB firm to complete the testing and balancing in accordance with the Contract Documents and deduct the cost of the services from the final payment.

**3.13 ADDITIONAL TESTS**

A. Within 90 days of completing TAB, perform additional testing and balancing to verify that balanced conditions are being maintained throughout and to correct unusual conditions.

B. Seasonal Periods: If initial TAB procedures were not performed during near-peak summer and winter conditions, perform additional testing, inspecting, and adjusting during near-peak summer and winter conditions.

END OF SECTION

P:\13 PROJECTS\P13-0334-00MCHENRY\04 DESIGN\11 SPECS\CONSTRUCTION SPECS\23 0593-TESTING ADJUSTING AND BALANCING FOR HVAC.DOCX

**SECTION 23 0900**
**BASIC TEMPERATURE CONTROL REQUIREMENTS**

## PART 1 - GENERAL

### 1.1 SECTION INCLUDES

A. Scope

B. Quality Assurance

C. Specifications

D. Project/Site Conditions

E. Work by Subcontractors

F. Coordinated Work

G. Project Phasing

H. Hazardous Materials

I. Design Submittals

J. Start-up and Testing

K. Guarantee

L. Substantial Completion Submittals

M. Closeout Submittals

N. Record Documents

O. Operating and Maintenance (O&M) Manuals

P. Training

Q. Preventive Maintenance Contract

### 1.2 SCOPE

A. The purpose of this project is to update, replace and expand the existing energy management and control systems [pneumatic temperature control systems].

B. The work includes the complete installation of an electronic building automation, energy management and temperature control system as identified below:

1. Control for the following systems:

a. Base Bid 1

(1) Modify existing chiller controls for new chillers
(2) Tie-in of new automatic chiller isolation valves
(3) Tie-in of new pump variable frequency drives
(4) Related software.

C. Contractor must take special precautions at all times to prevent any damage to Owner's equipment or premises. This Contractor shall be liable for any damage.

### 1.3 QUALITY ASSURANCE

A. The system shall be designed, installed, commissioned and serviced by manufacturer employed, factory trained personnel. Manufacturer shall have in-place a support facility within 100 miles of the site with technical staff, spare parts inventory and necessary test and diagnostic equipment. Distributors or licensed installing contractors are not

acceptable. Contractor must be an authorized representative of the controller manufacturer and shall be fully backed by same.

B. Materials and equipment shall be the catalogued products of manufacturers regularly engaged in production and installation of automatic temperature control systems and shall be the manufacturer's latest standard design that complies with the specification requirements.

C. All electronic equipment shall conform to the requirements of FCC Regulation, Part 15, Section 15, "Governing Radio Frequency Electromagnetic Interference" and be so labeled.

D. This system shall have a documented history of compatibility by design for a minimum of 10 years. Future compatibility shall be supported for no less than 10 years. Compatibility shall be defined as the ability to upgrade existing controllers and field panels and extend new controllers and field panels on a previously installed network.

E. The Contractor shall employ specialists in the field of Building Automation Systems including: Programming, Engineering, Field Supervision and Installation. Specialists shall have a minimum of 5 years of experience with Building Automation Systems.

F. The Contractor shall be responsible for all work fitting into place in a satisfactory, neat, workmanlike manner acceptable to the Owner and Engineer.

**1.4 SPECIFICATIONS**

A. The Contract Documents are to be considered scope in coverage only and do not necessarily show the exact location and details of the work to be installed. It shall be the responsibility of the Contractor to furnish and install the work in conformity with the requirements of these Specifications, the applicable codes, regulations and standards, the best trade practices and to meet with the approval of Owner. If any departures from the Contract Drawings are deemed necessary by the Contractor, details of such departures and the reasons therefore shall be submitted immediately to Engineer for approval.

B. If the drawings and/or specifications are in conflict with governing codes, the Contractor shall submit proposal with appropriate modifications to the project to meet code restrictions. If this specification and associated drawings exceed governing code requirements, this specification shall govern.

C. If the drawings and specifications are in conflict with each other, the more stringent shall apply.

**1.5 PROJECT/SITE CONDITIONS**

A. Before submitting Proposal, the Contractor shall visit and carefully examine the individual sites so as to familiarize himself with existing conditions, the amount of work required, the working hours and special auxiliary restrictions of the project requirements including storage and delivery of materials.

B. The Contractor shall verify all conditions on the job which may affect the installation of the work, and shall familiarize himself with applicable local and state regulations. Any discrepancies or interferences shall be reported immediately to Engineer. Additions to the contract price will not be allowed when they are due to the failure of the Contractor to carefully inspect existing condition.

C. The submission of a Proposal will be construed as evidence that such examination has been made. Later claims for labor, equipment or material required for difficulties

encountered, which could have been foreseen had such examination and evaluation have been, will not be recognized.

**1.6 WORK BY SUBCONTRACTORS**

A. The temperature controls contractor for the site is Alpha Controls. Contact Jason Vogelbaugh at 217 299.1379 or JasonV@AlphaACS.com

B. All Subcontractors to the Contractor shall be approved by Owner.

C. The Contractor shall be totally responsible for his work and all work by his Subcontractors.

**1.7 COORDINATED WORK**

A. This Contractor shall cooperate with other contractors performing work on this project, or other projects at the site, as necessary to achieve a complete, neatly fitting installation for each condition. To that end, each Contractor shall consult the drawings and specifications, for all trades to determine nature and extent of other work.

**1.8 PROJECT PHASING**

Not Applicable

**1.9 HAZARDOUS MATERIALS**

A. If hazardous materials including, but not limited to, asbestos, pollutants, or PCB are in any way suspected, inform Owner immediately and suspend work on that portion of the project.

**PART 2 - PRODUCTS**

Not Applicable

**PART 3 - EXECUTION**

**3.1 DESIGN SUBMITTALS**

A. Submit all design submittals per Division 01.

1. Submit electronic copies of all drawings and product data every time a submission is made until final approval.
2. Separate submittals may be made: hardware and software.

B. Engineer shall review and comment on copies submitted.

C. If design does not conform to the design intent, Contractor shall resubmit to Engineer.

D. Submittals and drawings shall be sufficient to:

1. Show that the intent of the specification has been met.
2. Provide a document for use by Owner showing all equipment incorporated into the system including both new and existing.
3. Provide a document for use by Owner showing all equipment pneumatic and wiring connections of the system for both new and existing equipment.

E. Items to be included in hardware drawings at minimum are:

1. Include a complete bill of material of equipment used indicating quantity, manufacturer and model number and other relevant technical data.

2. Include manufacturer's description and technical data, such as performance curves, product specification sheets and installation/maintenance instructions for the items listed in Division 23 Section 23 0901, "Temperature Control Hardware."
3. Provide each electrically operated device with completely coded interconnection wiring diagrams. Show all termination and wiring numbers.
4. Provide schematic wiring diagrams for each control panel. Show all terminations and wiring numbers.
5. Provide schematic wiring diagrams for all field sensors and controllers.
6. Provide each pneumatic operated device with complete piping diagram.
7. All schematic diagrams shall show both new and existing equipment for a complete control system schematic.
8. Provide system schematic diagrams for chiller plant and all other miscellaneous points. Schematics to indicate every monitored/controlled point associated with that system.
9. Provide system riser diagrams showing all controllers, workstations, network wiring, etc.

F. Items to be included in software drawings at minimum are:

1. DDC and ASC Controllers

a. Provide one manufacturer's program manual to Engineer. Manual shall contain complete description of all factory programs furnished and applications programming language.
b. At Engineer's request, provide programming flow diagrams of the applications software.
c. Include a complete description of the operation of the temperature control/monitoring system, including sequences of operation.

(1) Such descriptions are to be in Contractor's own words and not identically repeated from the Drawings.
(2) Where sequences indicate, imply or suggest the use of "look-up" tables based on testing to be performed during the project, Contractor shall include such tables using "best-guess" values as place-holders. Contractor shall use actual measured values as they become available.

d. Provide identification of those portions of the control sequences which are defined and activated by the Operator Workstation.
e. Provide the control loop algorithms/calculations proposed.
f. Provide a controller point list, including both inputs and outputs (I/O), indicating I/O point number, the controlled device associated with the I/O point and the location of the I/O device.
g. Provide schedules, lists or other documentation of all operation parameters.
h. The Contractor shall provide eight (8) hours of labor at Engineer's office for the principal program writer to meet with Engineer to interpret/review line by line programming.

G. Quantities of items submitted will not be reviewed by Engineer and are the responsibility of the Contractor.

H. When manufacturer's cut sheets apply to a product series rather than a specific product, the data specifically applicable to the project shall be highlighted or clearly indicated by other means. Clearly note exact models, options and accessories being provided. General catalogs will not be accepted as cut sheets to fulfill submittal requirements.

I. Drawings and product data not bearing the approval stamp of the Contractor, showing Contractor has reviewed and approved, or containing deviations from the contract documents, will be returned to the Contractor for resubmittal for compliance with above requirements.

J. Equipment furnished and installed which is not reviewed by Engineer and not conforming to the design concept of the project will have to be removed and replaced with acceptable equipment all at the cost of the Contractor.

K. Corrections or changes indicated on drawings and product data shall not be considered as extra work order.

L. Engineer's checking and reviewing of drawings is a gratuitous assistance and in no way relieves the Contractor from responsibility for errors or omissions which may exist on the drawings. Whenever such error or omissions are discovered, they must be made good by the Contractor, without any additional cost to Owner, irrespective of any review by Engineer.

M. Provide to Engineer any additional information or data which they deem necessary to determine compliance with these specifications or which they deem valuable in documenting the equipment to be installed.

**3.2 START-UP AND TESTING**

A. Where new digital controls are being installed they shall be installed to the greatest extent possible before switch over from the existing temperature control system.

1. Prior to switch over, the controllers shall be completely installed, checked and tested.
2. Controller software and hardware shall be verified prior to switch over.

B. Prior to testing and verifying proper system operation, Contractor shall furnish Engineer, for acceptance, electronic copies of the start-up/testing procedure proposed. Engineer must approve the check-out procedure prior to start-up/testing.

C. The start-up/testing procedure shall be submitted in writing one (1) calendar month prior to the projected start of start-up/testing.

D. Check out procedure must include provisions for technicians to specifically check off procedures or tests performed.

E. At minimum, the following shall be included in the checkout procedure:

1. The Contractor shall test and verify proper operation for each control loop.
2. Each control loop check will verify that the controller, manual override, fail-safe control and electric interlocks are operating as intended to accomplish the control strategy.

a. Provide to Engineer trend logs of a minimum of thirty minutes in length, sampling no less frequently than every one minute, registering analog values of controlled variables showing that control loops respond adequately during system start-up as well as steady state conditions.

Logs must show the loop response to a step input of at least 5F change in setpoint or 10% relative humidity change in setpoint.

3. Contractor shall test and verify that correct terminations/designations of I/O are in place for each input and output.
4. Contractor shall test and verify that sensors are properly calibrated, operational, and are within the performance parameters established in this specification.
   a. Contractor shall have onsite instrumentation to calibrate/verify all analog input sensing. Instruments shall themselves be properly calibrated and be of greater accuracy than the sensors installed.
5. Contractor shall test and verify onsite that operator interface menus and help screens are properly displayed, and that point names and designations are correct.
6. Contractor shall test and verify communications between controllers.

F. Start-up of an individual digital controller shall be planned such that the entire switch-over and checkout of a system can occur in less than one day. Incomplete or unverified controller systems shall not be left in operation overnight without permission of Owner.
   1. Contractor will not be allowed to switch over additional systems until the present controller being worked on is 100% complete.

G. After the procedure is approved and after portions of the system are complete (phasing of system installation/commissioning to be approved by Owner) and ready to be placed into regular service, Contractor shall inform Owner of this fact in writing.

H. Contractor shall agree on start-up dates with Owner.

I. On each start-up date for completed portions of the system, Contractor shall have on-site qualified vendor field technicians to place the system in operation, making such tests, adjustments and changes as may be found necessary to insure successful operation of the installed equipment and systems.

J. Contractor shall notify Owner 24 hours in advance when equipment needs to be shutdown during start-up/testing.

K. All tests shall be documented by the Contractor and certified, verifying that the tests have been performed and that all deficiencies have been corrected.
   1. Contractor shall demonstrate on site to Engineer that each input and output operates as specified, control loops are tuned, alarms report as specified, failsafe modes are as specified, and other verification as requested by Engineer and/or Owner to demonstrate that the system has been checked by the Contractor.
   2. All testing must be performed and all deficiencies corrected to Engineer's and Owner's satisfaction.

L. At the end of start-up/testing, if equipment and systems are operating in a manner satisfactory to Engineer and Owner, Owner will sign a certificate affirming that the systems operation has been tested and accepted in accordance with the terms of his specification. The date of Owner's final acceptance of the entire system (not phased portions) will be the start of the guarantee period.

**3.3 GUARANTEE**

A. Workmanship and material for work specified shall be guaranteed free from defects for a period of twelve (12) months after final completion and acceptance by Owner of the

entire system, not portions of the system. Note that warrantees for individual controllers placed in service will not commence until the entire system is complete and accepted by Owner. Any equipment herein described that is shown to be defective during the guarantee period shall be adjusted, repaired, or replaced at no charge to Owner.

B. After the final inspection and demonstration, a punchlist of incomplete or unsatisfactory items will be developed by Engineer.

C. The Contractor shall respond to the punchlist with a date by which all items will be completed/corrected.

D. Upon completion of all punchlist items, the Contractor shall inform Engineer in writing of this fact. This date will serve as the tentative guarantee start date.

E. Upon verification that all punchlist items are complete by the Engineer, the tentative guarantee start date will become the actual guarantee start date.

F. Items which unreasonably delay the start of the guarantee and are beyond the Contractor's control such as change orders late in the project will not be considered in establishing the guarantee start date.

G. During the guarantee period, software updates/controller improvements (i.e., microprocessor chip changes) shall be provided to Owner at no charge. Coordinate with Owner prior to the installation of such changes.

Note: The intent of G. is to insure that Owner receives any product updates which are directed toward correcting a product problem which may or may not be apparent. It is not intended to automatically extend to Owner new product features or enhancements which did not exist at the time of Contract Award.

H. At Owner's request, the Contractor shall visit the building to clarify for the operating personnel any questions as to the proper operation and maintenance of the system during the first year after final acceptance of system.

**3.4 CLOSEOUT SUBMITTALS**

A. Contractor shall provide closeout submittals required by the Contract Documents including, but not limited to, the following prior to requesting Final Acceptance of the Work:

1. Record Documents as described in Paragraph 3.5 herein;
2. Operating and Maintenance Manuals for items so required by the various Specification Sections and other items as so requested by Owner and as described in Paragraph 3.6 herein;
3. Warranties, guarantees, and bonds as outlined in Paragraph 3.3 of this section;
4. Keys and keying schedule;
5. Tools, spare parts, maintenance stock of materials, etc.;
6. Evidence of compliance with requirements of governmental agencies having jurisdiction including, but not necessarily limited to:
   a. Certificates of Inspection;
7. Certificates of Insurance for products and completed operations;
8. List of subcontractors, service organizations, and principal vendors, including names, addresses, and telephone numbers where they can be reached for emergency service at all times including nights, weekends, and holidays;

9. Verification that all training has been reviewed with Owner personnel as described in Paragraph 3.7 herein;
10. Certified copy of final punchlist of itemized work to be completed or corrected (including equipment requiring final connection), stating that each item has been completed or otherwise resolved for acceptance, endorsed and dated by Owner;
11. Revised evidence of final, continuing insurance coverage complying with the insurance requirements;
12. Final Application for Payment in accordance with the provisions of the Contract Documents;

B. Contractor and all Subcontractors and major material suppliers who have furnished material or labor for the Work under contract with the Contractor or Subcontractor shall submit final lien waivers. The lien waivers shall be for the full amount of the Contract involved.

**3.5 RECORD DOCUMENTS**

A. General

1. When conflict occurs between various technical specification sections and this Section 23 0900, "Basic Temperature Control Requirements," the more stringent requirements shall govern.
2. Each Contractor shall maintain at the site for Owner one record copy of all drawings, specifications, addenda, approved shop drawings, change orders, and other modifications, in good order and marked to record all changes applicable to the work made during construction. All changes made during construction shall be recorded by the Contractor. Contractors shall be responsible for accuracy of all changes made.
3. The daily record of changes shall be the responsibility of Contractor's field superintendent. No arbitrary mark-ups will be permitted.
4. Failure to keep accurate records of equipment installed will require the Contractor to site verify the installation as required, all at Contractor's expense.

B. Recording

1. Legibly mark and record at each Product section of the Project Manual a description of actual Products installed, including the following:
   a. Manufacturer's name and product model and number.
   b. Product substitutions or alternates utilized.
   c. Changes made by Addenda and Modifications.
2. Record Drawings: Legibly mark to record actual construction:
   a. Location of devices (sensors, actuators, controllers, etc.) internal utilities (including conduit routing), and appurtenances, concealed in construction or not readily observable from floor level, referenced to visible and accessible features of structure.
   b. Changes of dimension and detail.
   c. Details not on original Contract Drawings.
   d. Modifications/additions to original electrical and pneumatic interface schematics.

C. Submittal

1. During the first week of each month, Contractor shall present, at the project site, the job copy showing variations and changes to date to Owner for review.
2. At completion of Project, submit copies on disk of Project Record Documents to Owner. Project Documents shall contain Project Documents indicating all changes made during construction. Accompany submittal with transmittal letter, in duplicate containing:
    a. Date
    b. Project title and address
    c. Contractor's name and address
    d. Title and number of each record document
    e. Certification that each document as submitted is complete and accurate.
    f. Signature of Contractor or his authorized representative.

**3.6 OPERATING AND MAINTENANCE (O & M) MANUALS**

A. Contractor shall also provide required quantity of O&M manuals for Owner Training as specified in Division 01.

B. The format and information contained in the new O & M manuals will be as follows:

1. Format
    a. Binders: Commercial quality, 8½" x 11" three-ring binders with hardback, cleanable, plastic covers; one inch maximum ring size. Use multiple binders as required.
    b. Front cover and binding: Identify each binder with typed title.
    c. Tab Dividers: Provide tabbed fly leaf for each separate product, system or subject with typed description.
    d. Table of Contents: Provide table of contents for each volume.
    e. Project Record Drawings: Reduce AutoCAD drawings to 11" x 17" format, provide with reinforced punched binder tab. Bind in with text; fold drawings to size of text pages. (Larger drawing will be allowed if 11" x 17" format is unreadable.)
2. Volume 1 Hardware
    a. Section 1:
        (1) Include all submittals and drawings updated to as built conditions.
        (2) Include manufacturer's operation and installation instructions for items such as modems, printers, CRTs, computers, keyboards, etc.
    b. Section 2:
        (1) Field hardware, product literature.
    c. Section 3:
        (1) Controller product catalogs, controller panels, electronic cards, components, etc.
3. Volume 2 Custom Software
    a. Section 1 - Software. Provide print outs of all software programming files, including but not limited to all point logs, alarm logs, points with attributes, engineering unit file, programs, message file, etc. Provide

software submittals including flow charts and description of operation updated to as built conditions.

b. Section 2 - Control. Provide software submittals including flow charts and description of operation updated to as built conditions.

c. Section 3 - Users Summary Catalog. Provide important information which operators would be expected to use on a day by day basis. Work with Owner in defining exact material to be included in this manual.

C. Provide electronic copies of all job software on disks which can be directly loaded by Owner.

D. All drawings, applications software and other job documentation will become the property of Owner.

E. Distribution of O&M manuals will be by Owner.

**3.7 TRAINING**

A. Contractor shall provide one (1) training session during the Contract period. Training shall be coordinated with the Owner such that personnel from all three working shifts are available.

B. One month prior to training, the Contractor shall provide an outline of all topics to be covered in all sessions for approval by Owner.

C. The instructor(s) shall be competent and have full knowledge of the system installed and shall provide training specifically oriented to Owner's installed system.

D. The instructor(s) shall utilize the operating and maintenance manual provided for the system as a reference manual during the training session. Each person attending the training session shall be provided with an O&M manual. At minimum, these sessions shall include the following:

1. Description of the overall control system configuration and physical layout, indicating location of all sensors and controlled devices.
2. Description of all programs and program features (software).
3. Description of the control strategies being utilized at the installation.
4. Description of all key hardware components utilized in the system.
5. Demonstration of how to communicate with (command and monitor) the DDC and ASC Controller(s).
6. Demonstration of the programming instructions required to use the system.
7. Demonstration of how to retrieve alarms and logs.
8. Demonstration of diagnostic trouble-shooting techniques for the system.
9. Description of any changes made to existing electric and pneumatic controls which remain.
10. Provide quick reference card for operator ease of operation.

**3.8 DDC PREVENTIVE MAINTENANCE AND REPAIR**

A. All new components shall be incorporated into existing maintenance contract. Bid shall include maintenance costs for new components until end of current maintenance contract.

B. Systems and components covered by this contract shall include:

1. All new digital and electric controls associated with the systems in each corresponding Bid.

C. Proposals shall be on the Contractor's standard form and schedules including:

1. Maintenance schedules or check-off lists for each of the various types of equipment to be supplied. Schedules will give both the servicing tasks and task frequency.

D. Online and On-Site Troubleshooting and Diagnostics

1. Maintain existing services.

E. Software Services

1. Maintain existing services.

F. Preventative Maintenance

1. Maintain existing services.

G. Corrective Maintenance, Repair and Component Replacement

1. Include cost of all labor and material.

H. Operator Training

1. Make recommendations for additional training of system operators. Indicate type of training suggested: written texts, video tape, off-site classroom, on-site classroom, etc.

I. Response Window and Response Time

1. Maintain existing services.

J. Service Documentation and Quality Assurance

1. Provide documentation of all service calls, including time, date and brief description of activity. Each PM work order will include inspection date, individual to report to, equipment identification, equipment location, work to be performed, and any special instructions.

END OF SECTION

P:\13 PROJECTS\P13-0334-00MCHENRY\04 DESIGN\11 SPECS\CONSTRUCTION SPECS\23 0900-BASIC TEMPERATURE CONTROL REQUIREMENTS.DOCX

**SECTION 23 0901**
**TEMPERATURE CONTROL HARDWARE**

## PART 1 - GENERAL

### 1.1 RELATED DOCUMENTS

A. The General Provisions of the Contract, including General Conditions of the Construction Contract and Supplementary Conditions and Division 01 of the specifications apply to the work in this section.

B. This section is hereby made part of all other sections of Division 23 as fully as if repeated in each.

### 1.2 SECTION INCLUDES

A. Direct Digital Control Controllers

B. Application Specific Controllers

C. DDC System Field Hardware

D. Miscellaneous Hardware

### 1.3 SCOPE

A. This Section establishes a minimum quality of hardware and installation and establishes standard equipment or equipment configurations.

B. The digital control/building automation system shall utilize systems as herein specified and manufactured by the existing temperature controls, Alpha Controls.

C. Work installed by the Contractor shall be done in a neat and workmanlike manner, as determined by Owner and in keeping with acceptable standards for this type of work.

D. Unless indicated in this specification, all materials used shall be new. Where items have been indicated to be reused, it is the Contractor's responsibility to insure that the reused items are operating properly and are in good condition. Contractor must make Owner aware of defective items designated for reuse. Owner will be responsible for repairs.

E. Submit data, at minimum, on the following:

1. Direct Digital Control Controllers
2. Application Specific Controllers
3. Network Communications
4. Direct Digital Control and Application Specific Controller Accessories
    a. Modem
    b. Battery
    c. I/O Point Termination Modules
    d. Output Status
    e. Means of Manual Control
    f. Communication Boards
    g. Enclosures
    h. Flow Sensors and Transducers
    i. Autozero Modules
    j. Electronic Damper Actuators
5. Field Interface Panels

6. DDC Field Hardware
    a. Sensors, including supporting documentation
    b. Transmitters
    c. Utility Interfaces
    d. Switches
    e. Relays
    f. Solenoid Air Valves
    g. Transducers
    h. Freezestats
    i. Power Supplies
7. Miscellaneous Hardware
    a. Electrical Surge Suppressor
    b. Electric HOA Switches

## PART 2 - PRODUCTS

### 2.1 DIRECT DIGITAL CONTROLLERS

A. All controllers shall be as indicated in paragraphs above.

### 2.2 NETWORKING COMMUNICATIONS

A. The new components shall utilize existing network architecture.

### 2.3 DDC CONTROLLERS

A. DDC Controllers shall be stand-alone, multi-tasking, multi-user, real-time digital control processors consisting of modular hardware with plug-in enclosed processors, communication controllers, hardware-based real time clock, power supplies and input/output (I/O) point termination modules.

B. Each DDC Controller shall support a minimum of two (2) Local Area Networks.

C. Each DDC Controller shall have sufficient memory to support its own operating system and databases, including:

1. Control processes
2. Energy management applications
3. Alarm management applications including custom alarm messages for each level alarm for each point in the system
4. Supervisory control of all ASC Controllers
5. Historical/trend data for points specified
6. Maintenance support applications
7. Custom processes
8. Operator I/O
9. Dial-up communications
10. Manual override monitoring

D. DDC Controllers shall provide a minimum of two RS-232C serial data communication ports for operation of operator I/O devices such as industry standard printers, operator terminals, modems and portable laptop operator's terminals. DDC Controllers shall allow temporary use of devices without interrupting the normal operation of permanently connected modems, printers or terminals.

E. Expansion of the DDC Controller I/O capacity through the use of expansion panels, expansion modules, I/O boards, etc., shall be allowed provided:

1. Capabilities of the expansion system are identical to the base DDC Controller.
2. Communicates with the base DDC Controller over a unique internal bus, separate for the peer-to-peer building level network and the local area network.
3. Relies on the micro-processor within the DDC Controller for all processing requirements.
4. Base DDC Controller does not become overloaded.
5. Where the expansion panel is physically located out of sight of the DDC Controller, provide a communication port for a portable operator terminal at every such expansion panel, unless otherwise noted on the Drawings. Such port shall be an extension of the same port as on the base DDC Controller and shall have the same capabilities.
6. Uses the same I/O termination modules as used for the base DDC Controller.

F. Each DDC Controller shall be capable of sharing point information with other DDC Controllers connected on the same network, such that control sequences executed at one DDC Controller may receive input signals from sensors connected to other DDC Controllers within the network. If the network communication link fails or the original DDC Controller malfunctions, the control loop shall continue to function using the last value received from the failed DDC Controller.

G. Except as noted on the Drawings as "global points," or "remotely connected points," all points for a system shall be physically connected to the same DDC Controller as where its system software resides.

H. Isolation shall be provided at all peer-to-peer network terminations, as well as all field point terminations to suppress induced voltage transients consistent with IEEE Standards 587, latest edition.

## 2.4 APPLICATION SPECIFIC CONTROLLERS

A. Application Specific Controllers (ASC) shall operate as a stand-alone controller capable of performing its specified control responsibilities independently of other controllers in the network, either DDC or ASC controllers.

B. Where specifically identified to be used on the Drawings, all ASC Controllers used within the same category shall be the same product.

C. Shall be a micro-processor based, multi-tasking, real-time digital control processor.

D. Shall include all point inputs and outputs necessary to perform the specified control sequences.

E. Shall support its own real-time operating system. Provide a hardware-based real time clock with battery backup to allow for stand-alone operation in the event communication with its supervising DDC controller is lost and to insure protection during power outages.

F. All programs shall be field-customized to meet the control sequences specified.

G. Programming of all ASC Controllers shall utilize the same language and programming interface.

H. Each controller shall have connection provisions for a portable operator's terminal. This tool shall allow the user to display, generate or modify all point databases and operating programs.

**2.5 DDC CONTROLLERS AND APPLICATION SPECIFIC CONTROLLERS - GENERAL**

A. Controllers shall be the latest versions available utilizing most recently updated software and hardware offered by the manufacturer

B. Each controller shall support firmware upgrades without the need to replace hardware.

C. Each controller shall act as a stand-alone unit; it shall not be dependent on another controller.

1. Each controller shall function as the system coordinator for the equipment management functions, control peripheral devices and perform all necessary calculations.
2. Each controller shall be independently programmed, with all operating and applications software residing within the unit.
3. All real-time control functions shall be resident in the DDC and ASC Controllers to facilitate greater fault tolerance and reliability.

D. Each controller shall continuously perform self-diagnostics, communication diagnosis and diagnosis of all panel components and connected sensors. The controller shall provide both local and remote annunciation of any detected component failures, low battery conditions or repeated failure to establish communication.

E. All controllers shall be UL-listed.

F. Provide all processors, power supplies, communications controllers, etc., so that the implementation of a point only requires the addition of the appropriate point sensor, point I/O termination module, wiring or pneumatic tubing, and software programming.

G. Every field point must be associated with a unique I/O point address. No multiplexing schemes are allowed.

H. Controllers shall be furnished in an all steel enclosure with baked enamel finish, NEMA type 1, UL-approved enclosure with a hinged access door and keyed latch. The enclosure shall be sized for sufficient mounting space of additional point termination modules to meet the required spared points and points designated on the Drawings as "future." The lock shall be keyed consistent with the all other Controllers and all field interface panels. Provide protected utility outlet. Controllers meeting these criteria may be directly-mounted. All other Controllers shall be mounted within such an enclosure.

<u>Exception</u>: A non-metallic enclosure furnished by the controller manufacturer may be provided when it can be demonstrated to the Owner that it:

1. Provides adequate protection for the mounting location.
2. All controller devices, such as point termination modules, power supplies, controller modules, communications modules, etc., are enclosed within the controller.
3. All wiring, tubing and their terminations are enclosed within the controller or an external cable trough.

<u>Exception</u>: Controllers mounted above the ceiling do not require keyed locks.

Exception: Terminal Equipment ASC Controllers do not require utility outlet.

I. Where two (2) or more units of the same class of equipment are required, these shall be the same products of a single manufacturer. However, the component parts of the system need not be the products of a single manufacturer.

J. Provide battery backed-up RAM memory and real time/calendar clock. The battery should have minimum five year shelf life so that replacement is infrequent. In the event of power failure, the operating system, application database, stored data and real time/calendar clock should be maintained intact for a minimum of 72 hours.

K. Power Failure and Restart

1. In the event of the loss of AC power to the controller, there shall be an orderly shutdown to prevent the loss of database or operating system software.

   a. Control sequences shall go to the normal system shutdown conditions.
   b. Non-volatile memory shall be incorporated for all critical controller configuration data. Battery back-up shall be provided to support the real-time clock and any critical data which may be in volatile memory, for a minimum of 72 hours.

2. Upon restoration of normal power, after a minimum off time delay, the controller shall automatically resume full operation without manual intervention. Input values and set points received from other controllers shall have default values setup in the event communication is lost between controllers.
3. Should the controller memory be lost for any reason, the Operator Workstation shall automatically reload the program and databases. Such reloading shall be transparent and without any intervention by the system operators.

   a. The system operators shall also have the capability of reloading the controller via the peer-to-peer building level network, via the local area network, via the local RS-232C port, or via telephone line dial-in.

L. Each controller shall be installed such that at least 20% spare capacity of each unique input and output is provided. In other words, if a controller requires 10 analog inputs (8 defined points plus 2 future points), capacity for 12 must be provided; two will remain as spare points.

1. This rule applies for all Base Bids, Alternates Bids and designated future points.
2. Input/output point termination modules to satisfy spare point requirements do not need to be provided. However, adequate space for them does need to be provided.

M. Terminations

1. Wiring to and from the controller shall be to terminal strips with screw type terminals. The use of wire nuts or crimped connections within the controller shall be minimized and will only be allowed if the device has fixed length leads pre-attached by the manufacturer. Wire nuts are applicable only to line voltage circuits. Crimped connectors are applicable to non-analog low voltage circuits.
2. All wiring within the controller shall be run in plastic wiring duct to give a neat and workmanlike appearance.
3. Every device and field termination shall be labeled using words, letters or numbers with permanent, mechanically fabricated or printed, laminated tags exactly corresponding to as-built drawings.

N. Input/Output Electrical Protection

1. All inputs and outputs (analog and binary) shall be protected, at minimum, to withstand 120VAC continuously without damage to the controller. Protection shall conform to IEEE Standard 587, latest edition, and shall be provided at field point terminations and at controller terminations.
2. Provide electrical surge protection on power and communications wiring to and from the controller.
3. This electrical protection includes any input or output supplied, whether or not it is utilized in meeting this specification.

O. Output Status

1. All outputs shall have a visual indication of their status without the need for an operator I/O device. Binary outputs shall use a light emitting diode (LED). Electrical analog outputs shall use a voltmeter, ammeter or LED bars. Pneumatic analog output indication shall be with pressure gauges or LED bars.
2. Applies to DDC Controllers, Application Specific Controllers and Field Interface Panels.

P. Manual Control

1. All outputs shall have a manual means for the operator to force specific outputs independent of the controller. Forced outputs which require the controller to be operating will not be accepted as a manual control method.

   Exception: Electric power to the I/O point termination modules may be required for manual operation.
2. Controller shall monitor the status of all override switches and inform the operator that automatic control has been inhibited. Controllers shall also collect override activity information for reports.
3. Where status monitoring is not an integral part of the I/O point termination module, provide separate binary input point to provide such monitoring.
4. Provide indication on the system graphic when the switch is in the "Hand" or "Off" position.
5. All binary outputs shall have a manual Hand/Off/Auto selector switch.
6. All analog outputs shall have a manual Hand/Auto selector switch and a manual gradual switch for manual control when the selector switch is in the "Hand" position.
7. All manual controls shall be integral with the controller.

## 2.6 DDC SYSTEM FIELD HARDWARE

A. Field Interface Panel

1. All field interface devices, where practical shall be mounted in field interface panels. All other field interface devices shall be mounted at the point of field interface in a separate enclosure suitable for the location. When the manufacturer provides an enclosure/packaging of the device or sensor suitable for the location that protects the device from dust and moisture, conceals integral wiring and moving parts, this enclosure shall be acceptable.
2. Mounted within the field interface panel shall be power supplies for sensors, interfacing relays and contactors, pneumatic to electric and electric to pneumatic transducers, manual override switches, etc.

3. Provide an enclosure meeting the same requirements as DDC Controllers and Application Specific Controllers.
4. No power line carrier type interfacing equipment will be allowed in the field interface panel.
5. Terminations
    a. Wiring to and from the field interface panel shall be to terminal strips with screw type terminals. Analog or communications wiring may use the field interface panel as a raceway without terminating. The use of wire nuts or crimped connections within the field interface panel shall be minimized and will only be allowed if the device has fixed length leads pre-attached by the manufacturer. Wire nuts are applicable only to line voltage circuits. Crimped connectors are applicable to non-analog low voltage circuits.
    b. All wiring within the field interface panel shall be run in plastic wiring duct to give a neat and workmanlike appearance.
    c. Every field interface device and every field termination shall be labeled using words, letters or numbers with permanent, mechanically fabricated or printed, laminated tags exactly corresponding to as-built drawings.

B. Analog Input Devices

1. Contractor shall provide equipment for analog inputs as indicated in the point lists and shown on the Drawings. This shall include the sensor and transmitter.
2. Sensors and transmitter provided shall be of the type that is universally accepted in the industry, can easily be second-sourced and could be utilized with the majority of digital controller manufacturer's equipment.
3. All sensors and transmitters utilized in a similar application shall be of the same manufacturer.
4. Sensing ranges and accuracies given are for the normal values anticipated. The actual sensor range will be dictated by the maximum and minimum sensed values anticipated and standard sensor ranges.
5. All sensors shall be calibrated at the midpoint of the expected sensed values.
6. Sensor/transmitter shall be appropriately packaged for the location, as follows:
    a. Thermal well housing for water applications.
7. Sensor/transmitter shall be appropriately selected to withstand ambient conditions, such as:
    a. Moisture or condensation, where it is a factor.
    b. Vibration from ductwork, equipment, etc.
    c. Reasonably expected transient conditions such as temperatures, pressures, humidity, etc., outside the normal sensing range.
8. Sensor/transmitter shall be appropriately selected to most closely match the expected sensing range.
9. Sensor/transmitter shall be appropriately selected for an accurate, responsive, and noise free signal.

10. The system shall maintain the specified end-to-end accuracy, indicated below for the noted range, throughout the guarantee period from sensor to controller read-out.

    a. Sensing accuracy shall be determined by the square root of the sum of the errors squared. All sensing errors introduced, including but not limited to, sensor accuracy as manufactured, repeatability, self heating, linearity, thermal drift, lead length, analog to digital conversion, annual sensor drift, etc., shall be taken into account.

    b. Contractor must submit all accuracy information required to prove that sensing accuracy provided will not exceed that specified.

        (1) Supporting documentation that solely indicates a percentage, without indicating what it is a percentage of (i.e., span, reading, etc.) will not be acceptable.

11. Sensor power supplies shall be located in Controller Panels or Field Interface Panels.

12. Temperature Sensor Assemblies

    a. Temperature sensing shall be with RTDs with matched transmitters. Thermistors, nickel and silver elements, thermocouples or pneumatic transmitters shall not be allowed.

    b. The assembly shall consist of a 1,000 ohm platinum RTD and a solid-state, 2-wire, 4-20mA transmitter. The transmitter shall be compatible with the temperature element and the DDC panel. The assembly shall be factory calibrated over the entire operating span.

    c. End-to-end accuracies shall be as follows:

| Application | Accuracy | Range |
|---|---|---|
| Chilled water | ± 0.20°F | 40°F - 70°F |

    d. Manufacturers: Hy-Cal, Minco or approved equal.

    e. Liquid Insertion

        (1) The assembly shall be contained in a housing suitable for pipe mounting.

        (2) Provide sensor/transmitter as specified above.

        (3) Existing thermal wells may be reused, at Contractor's option, only if used for existing automation system point to be replaced by this system. Use of thermal wells for thermometers or empty pressure gauge taps is not acceptable. Otherwise, provide new wells.

13. Current Measurement (Amps)

    a. Current measurement shall be by a combination current transformer and a current transducer. The current transformer shall be sized to reduce the full amperage of the monitored circuit to a maximum 5 Amp signal which will be converted to a 4-20 mA DDC compatible signal for use by the system.

    b. Current Transformer. Provide a split core current transformer to monitor motor amps.

        (1) Operating frequency - 10 - 80 Hz

(2) UL recognized
(3) Five amp secondary
(4) Select current ratio as appropriate for application.

c. Current Transducer. Provide a matching current to voltage or current to mA transducer and power supply. Current transducer shall include:

(1) 6X input over amp rating for AC inrushes of up to 120 amps.
(2) Manufactured to UL 1244.
(3) Accuracy: ± 0.5% of full scale, Ripple ± 1%.

d. When used for pump or fan status, differentiate signal between off, on with no load, and on with load (high and low speeds).
e. Manufacturers: Veris Industries or approved equal.

14. VFD Speed Feedback

a. Provide signal indicating actual variable frequency drive speed.
b. Provide all interface devices as required.

15. Highest Zone Thermostat Pressure

a. Obtain pneumatic control signal from existing pneumatic signal selector.
b. Verify calibration and setpoint for each existing thermostat connected to the signal selector.

C. Analog Output Devices

1. Contractor shall provide equipment for analog outputs as indicated in the point list and shown on the Drawings. This shall include digital to analog conversion and wiring or pneumatic tubing to the controlled device. When necessary, the analog output signal must be fed back and used in the control algorithm.
2. All controlled devices which are to be modulated are to receive analog signals of one of the following forms: 4-20 MA, 0-5 VDC or 0-10 VDC.
3. Analog output signal for variable frequency drives shall be 0-10 VDC.
4. Coordinate with chiller manufacturer for proper signal to control chiller capacity.

D. Binary Input Devices

1. Contractor shall provide equipment for binary inputs as indicated in the point lists and shown on the Drawings.
2. All binary shall be electrically isolated from the digital controller either by optical isolation or relays. Provide filtering to eliminate false signals resulting from input "bouncing."
3. All binary inputs shall be provided by double or single pole-double throw dry contacts wired Normally Open (NO) or Normally Closed (NC) as required. All binary inputs will be wired to alarm on "out of normal" conditions.
4. Status Relay. Relays shall be located in the field interface panel or in the monitored equipment's control panel. These relays shall be of the sealed, multiple pole type with socket mount. These relays shall have silver cadmium contacts with a minimum life of one million operations. Contact rating shall be 5 amps at 110 volts resistive. Provide Potter Brumfield, Allen Bradley or approved equal.
5. Current Status Switch

a. Self-powered current sensing consisting of a current transformer, solid state current sensing circuit, adjustable trip point, solid state switch, dry

contact SPDT relay and separate LEDs indicating the power and sensor trip status.

b. Unit shall be capable of detecting belt loss, belt failure, motor failure and other mechanical failures.

c. Unit will be accurate to within ± 1% of range.

d. Unit shall be suitable for variable frequency drive applications.

e. A conductor of the load shall pass through the window of the device. Device shall be able to accept up to twice its trip point range.

f. Shall be used for all fan and pump status points, unless otherwise noted on the Drawings.

g. Manufacturers: Veris Industries or approved equal.

6. VFD Fault Status

a. Provide status indication of the variable frequency drive being in a fault condition.

b. Obtain contact closure from variable frequency drive.

7. VFD Manual/Bypass Status

a. Provide status indication of the variable frequency drive placed into manual control mode or in bypass mode.

b. Obtain contact closure from variable frequency drive.

E. Binary Outputs

1. Contractor shall provide equipment for binary outputs as indicated in the point list.

2. For all binary outputs to inductive loads such as relay, solenoid, or motor coils, transient voltage suppression shall be placed across the binary output relay contacts.

3. Binary outputs shall be wired/piped normally open or normally closed for proper operation and failsafe operation.

4. Control relays shall be located in the field interface panel. These relays shall be of the sealed, multiple pole type with socket mount. These relays shall have silver cadmium contacts with a minimum life of one million operations. Contact rating shall be 5 amps at 110 volts resistive. Provide Potter Brumfield, Allen Bradley or approved equal.

NOTE: No inductive or switching loads shall be mounted in the same enclosure as digital controllers.

## 2.7 MISCELLANEOUS HARDWARE

A. Valve/Damper End Switch

1. Shall be oil tight, roller type, SPDT snap acting switch.

2. Contact rating: 5 amps at 110 volts resistive.

3. Mechanism to provide ample over travel to prevent stress on damper and control equipment.

4. Manufacturers: Furnas Electric or approved equal.

B. Electric H.O.A. Switches

1. Provide control panel and MCC mounted electric Hand/Off/Auto switches as required.

2. Contact rating: 5 amps at 110 volts resistive.
3. Manufacturers: Square D 9001-D4G3S, Allen Bradley or approved equal.

## PART 3 - EXECUTION

### 3.1 GENERAL

A. Items to be so labeled include, but are not limited to:

1. Dampers and operators.
2. Valves and operators.
3. Controllers and field interface panels.

   Note: Labeling of modules and devices within controllers and panels (such as point modules, E/P switches, etc.) is <u>not</u> included.

4. Sensors, transmitters and transducers including DDC, pneumatic and electric.
5. Operator interface workstation. Label each separate piece of equipment.
6. Portable operator interface devices.

### 3.2 DDC AND APPLICATION SPECIFIC CONTROLLERS

A. General

1. The control system will be turned over to Owner in complete operating order. All new hardware will be checked, calibrated, and adjusted for immediate use. All software required will be turned over to Owner ready for use, including all operating parameters, set points, and schedules.
2. Each controller will operate as a stand-alone unit such that it does not require any other unit or any operator interface to be on-line to perform its specified functions.
3. Provide control inputs and outputs as indicated on the point lists.
4. For each input point, provide the required field hardware necessary to provide the listed input point to interface to its respective control panel.
5. For each output point, provide all control devices required to provide proper control of the point.

B. Controllers are to be powered by individual 120/1/60 power circuits.

1. Obtain power from same type of source (normal or emergency) as the system(s) being controlled the nearest emergency power circuit. Where controller serves multiple systems on both normal and emergency power, power shall be obtained from an emergency power circuit.
2. A separate third wire (independent grounding wire) shall be furnished as part of the control panel power circuit.
3. Provide a fused disconnect at each controller panel. Non-control loads are not to be on this circuit.
4. Each panel shall be protected by an electrical power surge protector.

   NOTE: No inductive or switching loads shall be mounted in the same enclosure as the Controller. This is to eliminate any chance for electrical interference with the Controller.

   NOTE: No line voltage power may be directly connected to the input/output terminal strip.

5. Terminal Equipment ASC Controllers may share a common circuit.

C. Before mounting each panel, the Contractor shall examine the mounting location for exposure to water leakage. Panels shall not be located directly below or next to any piping valve or accessory which might leak or require servicing. Mounting location shall provide full accessibility to the panel.

D. Panel shall be mounted to a permanent wall or it shall be mounted on a free standing, unistrut type support system.

E. The panel shall be labeled using one inch plastic engraved tags. Every termination to the panel shall be labeled with mechanically fabricated or mechanically printed letters, numbers, etc., which exactly correspond to as-built drawings.

F. Provide typewritten point list at each new controller.

G. Electrical Interference

1. The Contractor will follow the equipment manufacturer's recommendations and incorporate shielding to insure that the electronic control system does not experience any supply voltage transients or electromagnetic interference.
2. Should the system fail to operate satisfactorily due to any electrical interference, the Contractor will take corrective action at no charge to Owner. This will remain in effect until the end of the warranty period.
3. The Contractor shall install all equipment in a manner such that it is not adversely affected by electromagnetic noise. If so, the Contractor shall make any necessary corrections.
4. The Contractor shall install all equipment in a manner such that it does not produce electromagnetic noise which affects other equipment located at this facility. If so, Contractor shall make any necessary corrections.

## 3.3 DDC SYSTEM FIELD HARDWARE

A. Field Interface Panel

1. The panel shall be firmly attached to a permanent wall or it shall be free standing from unistrut type supports. It shall be mounted directly adjacent to the controller panel.
2. Provide individual 120V power circuits to each panel. A separate third wire (independent grounding wire) shall be furnished as part of the field interface panel power circuit. Power source shall be the same as the controller.
3. Provide a fused disconnect at each panel. Non-control loads are not to be on this circuit.

B. Sensors

1. All water temperature sensors shall be installed in wells.

## 3.4 MISCELLANEOUS HARDWARE

A. Miscellaneous hardware shall be installed as per manufacturer's recommendations.

B. Thermostat and switch set points shall be set by the contractor to an appropriate level for the application.

END OF SECTION

P:\13 PROJECTS\P13-0334-00MCHENRY\04 DESIGN\11 SPECS\CONSTRUCTION SPECS\23 0901-TEMPERATURE CONTROL HARDWARE.DOCX

**SECTION 23 0902**
**TEMPERATURE CONTROL SOFTWARE**

## PART 1 - GENERAL

### 1.1 SECTION INCLUDES

A. DDC and ASC Controller Software Description

B. Operator Workstation Software Description

C. DDC System Point List

D. Alarm, Trend Log, Totalization Lists

E. Color Graphics

F. Control Sequences of Operation

G. Control System Failures

### 1.2 SCOPE

A. All necessary software to form a complete operating system as described in this specification shall be provided.

### 1.3 SUBMITTALS

A. Comply with pertinent provisions of the Project Manual.

B. Submit data on the following:

1. DDC and ASC Controller Software Capabilities
2. DDC System Point List
3. Job Specific Software Data Bases
4. Control Software Programs and Flow Charts
5. Control Sequences of Operation

## PART 2 - PRODUCTS

### 2.1 CONTROL SOFTWARE DESCRIPTION

A. General

1. The software programs specified in this section shall be provided as an integral part of the DDC and ASC controllers and shall not be dependent upon any higher level computer for execution.
2. The Contractor shall work with Owner to enter all operating information for software provided, such as point name descriptions, passwords, etc., such that at job finalization, all this information is entered. The Contractor shall be responsible for this information being completely entered and documented before job finalization.
3. Provide software required to meet the control strategies and performance described in this Section.

    a. Owner reserves the right to make changes in the software control strategies and sequences at the time of approval of the software submittals without change in cost to Owner.

4. Software shall be turned over to Owner, complete and ready for operation. Operator entered parameters shall be entered as shown. When not indicated, submit a written request for values to Owner.
5. Note that all setpoints and time delays shall be operator adjustable. Coding Setpoint values into the programming is not allowed.
6. The Operator shall have the ability to custom program any control program software online.
    a. The custom programming package shall provide online process text editing. This capability shall allow creation, addition, deletion, or modification of a program.
    b. The custom programming package will verify operator inputs to insure there are no language errors. All errors found shall be identified to the operators.
    c. Software shall be segmented such that editing of one program does not affect other programs.
7. The Operator shall have the ability to online interrogate or modify setpoints and parameters of any controller.
    a. The Operator shall be able to identify field points by a short name and shall not require look-up charts to call up a specific point.
    b. All displayed field points, parameters or setpoints shall be shown, properly scaled with correct engineering units.
    c. All analog values shall show scale such as degrees F, percent RH, etc. All binary points shall indicate status such as on/off, open/closed, etc.
8. The software provided shall be programmed to create a system in which the network architecture is invisible to the operator. The operator shall be able to monitor point statuses, etc., without the need for referencing hardware point locations in controllers.

B. Pre-tested Control Algorithms. The DDC and ASC Controllers shall have the ability to perform the following pre-tested control algorithms as required:
1. Two Position Control
2. Proportional (P) Control
3. Proportional plus Integral (P+I) Control
4. Proportional, Integral, plus Derivative (P+I+D) Control
5. Automatic Control Loop Tuning

C. Control Algorithm Tuning. The Contractor shall tune control algorithm to actual conditions such that all control sequences are stable, yet control gain is maximized.
1. Two Position and Proportional Control
    a. Control loops for space temperature shall not over or under shoot by more than 2°F on start-up conditions.
    b. Control loops for humidity shall not over or under shoot by more than 10% relative humidity on start-up conditions.
    c. Control loops for duct temperature shall not over or under shoot by more than 5°F on start-up conditions.

2. P+I and P+I+D Control and Automatic Control Loop Tuning

a. Control loops shall be tuned to achieve both short-term response and long-term stability.

b. Short-Term Response:

(1) Controlled variable shall achieve 80% of a step-change in setpoint within the time shown below. The acceptable number of cycles of over- and under-shoot (error) are as shown below.

(2) Controlled variable shall achieve 100% of a step-change in setpoint and stabilize within the time shown below. The acceptable number of cycles of over- and under-shoot (error) are as shown below.

(3) All control loops shall be tested and tuned to achieve the above requirements when subjected to a step-change up and a step-change down from setpoint.

(4) All allowable times and cycles shown reference the step-change in setpoint.

| Controlled Variable | Change in Setpoint | 80% of Step-Change in Setpoint | | | 100% of Step-Change in Setpoint | | |
|---|---|---|---|---|---|---|---|
| | | Time (min) | Error | Cycles of Error | Time (min) | Error | Cycles of Error |
| Chilled Water Temperature (small and short systems) | 2°F | 3 | -- | -- | 8 | 0.5°F | 3 |
| Chilled Water Temperature (large or long systems) | 2°F | 5 | -- | -- | 10 | 0.5°F | 3 |
| Water Differential Pressure | 5 psig | 2 | -- | -- | 5 | 1 psig | 3 |
| Water Pressure | to be determined in the field | | | | | | |
| Water Flow | to be determined in the field | | | | | | |

(5) When control loop responses cannot be met due to limitations of controlled equipment, provide documentation substantiating such limitations.

Example: Discharge air temperature cannot meet cooling setpoint within the above response times even though the cooling coil valve is fully open. Insufficient online chiller capacity, pumping, coil capacity, etc.

c. Long-Term Response:

(1) Once the controlled variable has attained setpoint, it shall maintain setpoint within the following:

(a) Chilled water temperature ±0.10°F

3. All control loops shall be capable of driving their respective actuator full stroke in less than one (1) minute.

D. Equipment Cycling Protection. Control software shall include a provision for limiting the number of times each piece of equipment may be cycled within any one-hour period.

E. Heavy Equipment Delays. The Controller shall provide protection against excessive demand situations during start-up periods by automatically introducing time delays between successive start commands to heavy electrical loads.

F. Power Fail Motor Restart. Upon the resumption of normal power, the Controller shall analyze the status of all controlled equipment, compare it with normal occupancy scheduling, and turn equipment on or off as necessary to resume normal operation.

G. Energy Management Applications. Controller shall have the ability to perform all of the following energy management routines, whether utilized or not.

1. All Controllers

   a. Time of Day Scheduling
   b. Calendar Based Scheduling
   c. Holiday Scheduling
   d. Temporary Schedule Overrides
   e. Night Setback Control
   f. Heating/Cooling Interlock

2. All Controllers except Terminal Equipment ASC Controllers

   a. Optimal Start and Stop (coordinated with Time of Day Scheduling)
   b. Peak Demand Limiting
   c. Water Temperature Reset
   d. Chiller Sequencing

3. All programs shall be executed automatically without the need for operator intervention, and shall be flexible enough to allow user customization. Programs shall be applied to building equipment where described on the Drawings.

H. Custom Process Programming Capability. Controllers shall be able to execute custom, job specific processes defined by the user, to automatically perform calculations and special control routines.

1. Process Inputs, Variables and Outputs:

   It shall be possible to use any of the following in a custom process:

   a. Any system-measured point data or status (inputs)
   b. Any calculated data (variables)
   c. Any results from other processes (outputs)
   d. User-defined Constants (variables)
   e. Arithmetic functions (+, -, *, /, square root, exp, etc.)
   f. Boolean logic operators (and, or, exclusive or, etc.)
   g. On-delay/Off-delay/One-shot timers (outputs)

2. Process Triggers

   Custom processes may be triggered based on any combination of the following:

   a. Time interval
   b. Time of day
   c. Date
   d. Other processes
   e. Time programming
   f. Events (e.g., point alarms)

3. Dynamic Data Access

A process shall be able to incorporate process input, variable and output data from any and all other Controllers on the network.

In addition, a process shall be able to issue commands to points in any and all other Controllers on the network.

4. Advisory/Message Generation

Processes shall be able to generate operator messages and advisories to operator I/O devices. A process shall be able to directly send a message to a specified device, buffer the information in a follow-up file, or cause the execution of a dial-up connection to a remote device such as a printer or pager.

5. Custom Process Documentation

The custom control programming feature shall be self-documenting. All interrelationships defined by this feature shall be documented via graphical flowcharts and English language descriptors.

I. Alarm Management. Alarm management shall be provided to monitor, buffer, and direct alarm reports to operator devices and memory files. Each Controller shall perform distributed, independent alarm analysis and filtering to minimize operator interruptions due to non-critical alarms, minimize network traffic, and prevent alarms from being lost. At no time shall the Controller's ability to report alarms be affected by either operator activity at an Operator Workstation, local I/O device, or communications with other Controllers on the network.

1. Point Change Report Descriptions: All alarm or point change reports shall include the point's English language description and the time and date of occurrence.
2. Prioritization: The user shall be able to define the specific system reaction for each point. Alarms shall be prioritized to minimize nuisance reporting and to speed operator response to critical alarms.
   a. A minimum of three priority levels shall be provided.
   b. Each Controller shall automatically inhibit the reporting of selected alarms during system shutdown and start-up.
   c. Point priority levels shall be combined with user definable destination categories (i.e., Operator Workstation, printer, Controller, pager, etc.) to provide full flexibility in defining the handling of system alarms.
   d. Users shall have the ability to manually inhibit alarm reporting for each point.
   e. The user shall also be able to define under which conditions point changes need to be acknowledged by an operator, and/or sent to follow-up files for retrieval and analysis at a later date.
3. Report Routing: Alarm reports, messages, and files will be directed to a user-defined list of Operator Workstations used for archiving alarm information. Alarms shall also be automatically directed to a default device in the event a primary device is found to be off-line.
4. Alarm Messages: In addition to the point's descriptor and the time and date, the user shall be able to print, display or store an alarm message to more fully describe the alarm condition or direct operator response.

5. Auto-Dial Alarm Management: In Dial-up applications, only critical alarms shall initiate a call to a remote operator device. In all other cases, call activity shall be minimized by time-stamping and saving reports until an operator scheduled time, a manual request, or until the buffer space is full.
6. Local Alarms: The Controller shall provide alarms for all analog input values that are outside of user definable ranges, for all binary output points that do not prove status based on a paired binary input status point, and for all programmed binary alarm status points.
    a. The user shall be able, from the Operator Workstation, to configure the alarm limit ranges, limit deadbands and to enable/disable the alarm.
    b. The user shall be able to configure any Controller alarm as a conditional alarm that will only occur when a selected binary point is on or off. This shall be used to prevent nuisance alarms during non-operating and/or Controller start-up modes.
    c. Analog input alarms shall be operator configured to alarm based on:
        (1) An operator adjustable alarm deadband which shall generate a warning or alarm whenever the value is above/below the current active setpoint plus/minus the alarm deadband.
        (2) High and low alarm limit setpoints and return to normal values or deadbands.

J. Historical Data and Trend Analysis. A variety of historical data collection utilities shall be provided to manually and automatically sample, store, and display system data in all of the following ways.
1. Continuous Point Histories: DDC Controllers shall store Point History Files for all analog and binary inputs and outputs and calculated variables ("virtual" points) for their own points and for all ASC Controller points attached to the DDC Controller.
    a. The Point History routine shall continuously and automatically sample the value of all analog inputs at half hour intervals. Samples for all points shall be stored for the past 24 hours to allow the user to immediately analyze equipment performance and all problem-related events for the past day.
    b. Point History Files for binary input, binary output points and analog output points shall include a continuous record of the last ten status changes or commands for each point.
2. Control Loop Performance Trends: DDC Controllers shall also provide high resolution sampling capability with an operator-adjustable resolution of 10-300 seconds in one second increments for verification of control loop performance.
3. Extended Sample Period Trends: Measured and calculated analog and binary data shall also be assignable to user-definable trends for the purpose of collecting operator-specified performance data over extended periods of time. Sample intervals of one minute to two hours, in one minute intervals, shall be provided. Each DDC Controller shall have a dedicated buffer for trend data.
4. Data Storage and Archiving: Trend data shall be stored at the DDC Controller and uploaded to hard disk storage at the Operator Workstation when archival is desired. Uploads shall occur based upon either user-defined interval, manual

command, or when the trend buffers become full. All trend data shall be available in disk file form for use in third party personal computer applications.

5. Historical data and trend data shall be provided in formatted reports. User shall be able to define multiple groupings of trend data, each with a unique name. Points may be assigned to multiple groups, each with different collection parameters.
6. Provide commands to view and print reports utilizing the user's defined unique name given to each.

K. Run Time Totalization. DDC Controllers shall automatically accumulate and store run time hours for binary input and output points when specified in the Execution portion of this specification.

1. The user shall have the ability to define a warning limit for Run Time Totalization. Unique, user-specified messages shall be generated when the limit is reached.

L. Analog/Pulse Totalization. DDC Controllers shall automatically sample, calculate and store consumption totals on a daily, weekly, or monthly basis for user-selected analog and binary pulse input-type points when specified in the Execution portion of this specification.

1. Totalization shall provide calculation and storage of accumulations of data such as kWH, gallons, kBtu, ton-hours, etc.
2. The user shall have the ability to define a warning limit. Unique, user specified messages shall be generated when the limit is reached.

M. Event Totalization. DDC Controllers shall have the ability to count events such as the number of times a pump or fan system is cycled on and off. Event Totalization shall be performed on a daily, weekly, or monthly basis as programmed when specified in the Execution portion of this specification.

1. The user shall have the ability to define a warning limit. Unique, user-specified messages shall be generated when the limit is reached.

N. Communications. Provide all software programs to support communications between Controllers, local operator interface(s) and Operator Workstation. Provide software programs for automatic dial-in from a remote terminal to the control system and automatic dial-out from the control system to a remote terminal.

O. Daylight Savings Time. Provide program which will automatically update each Controller's system clock for daylight savings time and revert Controller's system clock to standard time.

P. Hardware/Software Trouble. The Controllers will self-test and monitor their hardware and software for system trouble. Upon detection of any trouble condition an alarm will be initiated at the Controller and at the Operator Interface Workstation. Failure of any unit on the system shall not affect the proper operation of the remaining system components.

Q. Field Point Trouble. The Controllers will analyze field inputs and outputs to monitor for field trouble. Upon detection of any trouble condition it will register an alarm. All alarms will be immediately forwarded to the Operator Workstation. All alarms shall be stored in memory at the DDC Controller.

1. Each analog input point shall be assigned maximum and minimum operating (or expected) values. When the sensed variable exceeds the assigned operating range or is open or shorted, an alarm shall be generated.

**2.2 OPERATOR WORKSTATION SOFTWARE DESCRIPTION**

A. General

1. Contractor shall provide all programming of the Operator Workstation related to the installation for controlling, monitoring and alarming the points associated with project. Also, programming shall be provided to store data, retrieve data, generate reports, communicate with all Controllers in the system to accomplish control, monitoring and alarming at the Operator Workstation, downloading of control programs of all connected input/output points to Controllers and to retrieve (upload) control programs from Controllers.
2. The Contractor shall provide start-up and testing of the programming. All specified programming shall perform to the satisfaction of Owner.
3. All programming provided by the Contractor shall be stored with existing system programming and backed up accordingly.
4. Owner shall aid Contractor with information as required for programming and as specified in this section.

B. Point Definitions

1. Each point in the system accessed by the monitoring/alarm Operator Workstation being either a hardware or software point, shall have a short logical name of six to twelve characters and shall have a long descriptive name of 25 to 50 characters.
2. Point definition information programmed by the Contractor shall include but not be limited to:
   a. Logical name
   b. Descriptive name
   c. DDC panel address where it resides
   d. Engineering units
   e. Sensing range
   f. Alarm limits
   g. Normal state/off normal state
   h. Control calibration values
   i. Point function type
3. Point logical names shall be automatically grouped when defining point names.
4. Owner will assist Contractor in developing point definitions where required.

C. Summaries

1. Programming to format summaries shall be provided by the Contractor for implementing user defined logs. The following are summaries that shall be created.
   a. All points

b. Points by defined groups
c. Alarms
d. Alarm limits
e. Time schedules
f. Alarm messages
g. Setpoints

D. Groups

1. Programming shall be created to provide the following point groups:

a. Chiller Plant
b. Miscellaneous controlled/monitored/alarmed devices

2. Include outside air temperature and humidity in chiller system point group.

E. Logs – Trend and Alarm

1. Programming to format logs shall be provided by the Contractor for implementing user defined logs. The following are logs that shall be created:

a. Analog trend
b. Binary trend
c. Alarms

2. Each trend log shall have user defined parameters to include:

a. Scheduled start/stop times
b. Sample time interval
c. Number of samples
d. Name of sampled point
e. Type of samples required
f. Engineering unit of samples

3. At minimum, the last sixty (60) values for all input and output points per Controller. Start time of trends shall be operator programmable.

a. Initially set up trend logs to record the inputs as defined in this section.
b. Initially time intervals shall be set at two (2) minutes, but shall be user changeable from (1) minute to one (1) hour.

4. The Operator will have the ability for each log to be automatically printed on time schedule or stored in memory, such that the print command can be manually executed.
5. Trend logs shall be capable of being exported to Microsoft Excel, which resides on the Operator Workstation.

F. Data Records

1. Programming to create, store and edit user defined data records shall be provided by the Contractor for implementing the following data records.

a. Summaries
b. Logs
c. Reports
d. Alarm lists
e. Alarm messages
f. System operation information
g. Operator information

G. Alarms

1. Programming to define specified points as alarm points shall be provided by the Contractor for implementing alarm receiving, reporting and printing.
2. All alarm messages shall be created and programmed by the Contractor for implementing in the event of alarm reporting.
3. Alarm reporting priorities shall be programmed by the Contractor as defined by Owner.
4. All incoming Controller alarms into Operator Workstation shall be programmed for alarm printer, screen and hard disk destinations.
5. Programming shall be created to provide alarms as defined in this section. Provide multiple alarms for multiple systems.

H. Color Graphics

1. Programming to create and store color graphic diagrams shall be provided by the Contractor as specified at the Operator Workstation.
2. All point values included in the color graphic diagrams shall be dynamic when the finished graphic is viewed, monitored, printed and reprogrammed.
3. Color graphic diagrams shall be stored in hard disk memory.
4. The Contractor shall create, program and store the color graphic diagrams.
5. Chiller Plant System Schematic – Modify existing single line piping including chillers, pumps, control valves, sensors and switches, etc.
6. Binary status and alarm devices included in the color graphic diagrams shall change color when indicating an on or off, high or low, or normal or alarm condition.
7. All point names of devices shown on the color graphic diagrams shall be shown next to their respective device.

## PART 3 - EXECUTION

### 3.1 DDC SYSTEM POINT LISTS

A. For each building system being monitored or controlled, provide input/out points as shown on the Drawings. Refer to Division 23 Section 23 0901, "Temperature Control Hardware," for required spare capacity.

### 3.2 ALARM LIST

A. Set up alarm programming for the system point conditions and events. Provide individual alarms for multiple systems, if appropriate.

### 3.3 TREND LOG LIST

A. Set up trend logs to record appropriate values for the following systems. Provide individual trends for multiple systems.

1. Chiller Plant
2. Miscellaneous controlled/monitored/alarmed devices

### 3.4 TOTALIZATION LIST

A. Runtime Totalization

1. Pumps
2. Chillers

B. Analog Totalization. Provide hourly, daily and monthly totalization calculations.

1. Refrigeration energy (based on current transformers)
2. Electrical energy consumption

C. Event Totalization

1. Pumps
2. Chillers

**3.5 COLOR GRAPHICS**

A. Provide the following project specific color graphic screens:

1. Chiller Plant System Schematic
2. Logs
   a. Alarm
   b. Trend
   c. Totalization

**3.6 CONTROL SEQUENCES**

A. Provide all hardware and software as required.

B. All existing safeties shall be maintained.

C. Provide dead band in all sequenced controls to avoid simultaneous heating and cooling.

D. Provide start/stop of all systems with appropriate safeties.

E. Provide initial time schedules and setpoints of all equipment. Obtain schedules from Owner. All schedules and setpoints shall be operator adjustable and not coded within the software.

F. Refer to Drawings for additional control sequence requirements.

G. Provide programming for the following energy management software:

1. Peak demand limiting
2. Chiller plant optimization
3. Optimal start/stop
4. Hydronic water temperature reset

**3.7 CONTROL SYSTEM FAILURES**

A. Digital control system failure is defined as loss of controller program, lock-up of controller program, loss of controller power or loss of field interface device power.

1. In the event of digital control system failure, specified chillers, primary chilled water pumps shall be wired to fail ON. Utilize normally closed digital output relay contacts for each chiller/pump that is to fail ON.
2. In the event of digital control system failure, supply fans shall remain in last commanded state (ON or OFF); all modulating dampers and valves shall remain in last commanded state.

END OF SECTION

P:\13 PROJECTS\P13-0334-00MCHENRY\04 DESIGN\11 SPECS\CONSTRUCTION SPECS\23 0902-TEMPERATURE CONTROL SOFTWARE.DOCX

**SECTION 23 0903**
**TEMPERATURE CONTROL CONDUIT**

## PART 1 - GENERAL

### 1.1 SECTION INCLUDES

A. Conduit

B. Connectors

C. Junction Boxes

### 1.2 SCOPE

A. This section includes conduit requirements for use with wire, cable and pneumatic polyethylene tubing.

### 1.3 SUBMITTALS

Not Applicable

## PART 2 - PRODUCTS

### 2.1 CONDUIT

A. All wiring shall be installed in a complete conduit raceway system of a minimum trade size of ½". Conduit shall be installed continuous from terminal to terminal and shall be mechanically and electrically connected. The entire system shall be grounded.

1. Exception: With permission of Owner, metallic surface raceway may be used in finished areas on masonry walls. All surface raceway in finished areas must be color matched to the existing finish within the limitations of standard manufactured colors. Receive authorization from Owner before using surface raceway.
2. Exception: The conduit system shall be complete except that up to 12" of exposed Class 2, 3, or communications wiring may be used from the conduit system to an actuator. Wiring extending beyond the conduit system shall be protected by a plastic bushing at the end of the conduit.

B. Conduit shall be rigid steel or IMC. EMT is not allowed.

C. Conduits installed in dry locations requiring flexible connections for adjustment or vibration isolation shall be provided with a 14" maximum length of flexible galvanized steel (Greenfield) conduit. Flexible conduit installed in wet locations and exterior locations shall be liquid-tight type.

### 2.2 CONNECTORS

A. Couplings and connectors for use with rigid aluminum shall be the threaded type. Terminations shall be with double locknut and insulated bushings. Fittings installed outdoors shall be water tight.

B. Couplings and connectors for electrical metallic tubing (EMT) shall be gland compression.

### 2.3 JUNCTION BOXES AND PULL BOXES

A. Provide junction boxes and pull boxes of the proper size and shape.

B. Junction and pull boxes shall be supported independently of the conduit system.

C. Junction and pull boxes shall be of galvanized steel construction.

D. Paint each junction box cover per specification Division 26 Section 26 0505, "Basic Electrical Materials and Methods." Mark cover using permanent marker to indicate that wiring enclosed is associated with the controls system.

## PART 3 - EXECUTION

### 3.1 CONDUIT INSTALLATION

A. Conduit shall not be smaller than the sizes indicated or specified, and where no size is indicated, the Contractor shall size the conduit in accordance with the requirements of the local/state Electrical Code for the number, size and type of wires indicated and specified for application, except that no conduit shall be less than ½" trade size.

B. Where conduit enters panel boxes, pull boxes, outlet boxes or wireways, it shall be secured in place by galvanized locknut on the outside and galvanized locknut and bushing on the inside. Bushing shall be insulated throat type with ground lug. Care shall be taken to see that all conduit runs from a permanent and continuous ground return back to the panel ground connection point. All bushings shall be bonded to the junction box, outlet box, cabinet, etc. Where required, bonding jumpers shall be installed between conduit and boxes.

C. Conduits for branch circuits shall be installed continuous between connections to outlets, boxes and cabinets and shall have a minimum possible number of bends or fittings. Bends shall be made with an approved hickey or conduit-bending machine and shall be smooth and even without flattening or flaking.

D. Exposed conduit runs shall be run neatly and shall be parallel to the walls of the building.

E. The actual installation of conduit shall be made in the field to clear all piping, ductwork, equipment fixtures, ceiling inserts, access doors, etc. Bends, turns, and pull boxes, as required, shall be provided in accordance with field conditions.

F. Conduit ends shall be reamed and shall be thoroughly cleaned before installation. Conduit openings and boxes shall be plugged or covered as required to keep conduit clean during construction. All conduit shall be swabbed clear of obstructions before the pulling of wires.

G. Conduit runs shall be securely fastened in place with approved straps, and hangers and supports from inserts set in the construction above. Vertical conduit shall be securely clamped to steel members and unistruts, and attached to the structure.

H. Conduit shall not pierce or interfere with waterproofing, vapor barriers, damp-proofing, etc.

I. Raceways run through foundation walls, basement slabs, or through any walls for floors that have vapor barriers, waterproofing, or any type of damp-proofing, shall be sealed by use of special wall and floor entrance seals designed for the purpose. Drawings of the proposed seals and clamping arrangements shall be submitted for approval.

J. Conduits passing from the building exterior to interior or passing between conditioned and non-conditioned spaces shall be sealed to prevent condensation in the conduit.

K. Conduits crossing building expansion joints shall be provided with expansion fittings and flexible grounded bonds bypassing the fittings to insure ground continuity.

L. All conduit shall be supported with fasteners designed for the application and must be attached to the building structure and shall not be supported from other conduit, pipes, ductwork, ceiling suspension members or equipment. Existing pipe hangers for multiple conduits with spare capacity may be used.

1. Exception: When conduit is required to terminate at a sensor or control point on ductwork, the conduit may be fastened to the ductwork. This is the only condition in which conduit is allowed to be fastened to ductwork.
2. Note: Perforated metal strap and tie wire are prohibited.

M. Existing conduit which is in place and has additional wire carrying capacity due to existing wiring being removed or due to original spare capacity may be used for new wiring if the conduit installation meets this Temperature Control conduit specification.

N. All openings for conduit passing through masonry walls or floor shall be core drilled by this Contractor. Core holes shall be sealed as follows:

1. For the conduits penetrating floor or fire walls, the Contractor shall provide fire stopping equivalent to the construction penetrated.
2. Where conduit passes through floor or exterior walls, caulk at both sides to insure waterproofing around conduit.
3. Where conduit penetrates walls separating quiet areas such as offices from noisy areas such as equipment rooms, the opening around the conduit shall be filled with fiberglass insulation and sealed.

**3.2 JUNCTION BOX INSTALLATION**

A. All outlets shall be installed in accessible locations and none shall be installed above ducts, behind furring or in other similar locations. Any outlet designated as providing power for particular piece of equipment shall be accessible for disconnection with said unit in place.

END OF SECTION

P:\13 PROJECTS\P13-0334-00MCHENRY\04 DESIGN\11 SPECS\CONSTRUCTION SPECS\23 0903-TEMPERATURE CONTROL CONDUIT.DOCX

**SECTION 23 0904**
**TEMPERATURE CONTROL WIRING**

## PART 1 - GENERAL

### 1.1 SECTION INCLUDES

A. Wire

B. Cable

### 1.2 SCOPE

A. Power wiring, Class 1, 2, or 3 wiring, and communications wiring required for satisfactory installation and operation of all equipment specified under temperature control shall be furnished and installed by this contractor.

B. Wiring shall be installed in accordance to wiring specification found in this section.

C. All wiring shall be UL listed and installed in accordance with applicable electrical codes and shall comply with equipment manufacturer's recommendations.

Note: When specified materials or installation methods exceed applicable electrical codes and equipment manufacturer's recommendations, this specification shall govern.

### 1.3 SUBMITTALS

A. Submit data and samples of the following:

1. Analog Cable
2. Other low voltage signal cable

## PART 2 - PRODUCTS

### 2.1 WIRE AND CABLE

A. All wires shall be copper and shall meet the minimum wire size and insulation class listed.

| Wire Class | Minimum Wire Size | Minimum Insulation Class |
|---|---|---|
| Power | 12 Gauge | 600 Volt |
| Class 1 | 14 Gauge Stranded | 600 Volt |
| Class 2 | 18 Gauge Stranded | 300 Volt |
| Class 3 | 18 Gauge Stranded | 300 Volt |
| Communications | Per Manufacturer | Per Manufacturer |

B. 120V power circuit wiring shall be #12 AWG. Home runs longer than 100 feet shall be #10 AWG.

C. 24V control power circuit wiring and all wiring to flow switches and relays shall be #14 AWG. Runs greater than 200 feet in length shall be #12 AWG.

D. Use twisted shielded pair, insulated and jacketed cable, #18 AWG minimum, for wiring to sensors (temperature, humidity, etc.). All sensor wiring shall have a 100% grounded shield.

E. Network communications wiring shall be in accordance with manufacturer's specifications.

F. Use THHN wires for power circuit wiring and all control wiring in dry locations; use THWN wires for wet locations.

G. Conductors shall be continuous from outlet to outlet and no splices or connections shall be made, except within outlet boxes, junction boxes or cabinets.

H. Permanent wiring shall not be pulled into conduits or raceways until permission is granted by Owner.

I. Where the space above a ceiling is a supply or return air plenum, the wiring therein shall be plenum rated.

## PART 3 - EXECUTION

### 3.1 WIRING

A. All sensor wiring shall use crimped or soldered connections; wire nuts are not allowed.

B. Sensor wiring shall be continuous containing no splices between the digital controller and the field sensor.

C. Identify all control/signal wires with labeling tape using either words, letters or numbers that can be exactly cross-referenced with as-built drawings.

### 3.2 INSTALLATION

A. Wires shall be kept a minimum of 3" from hot water piping, steam piping, condensate piping or any other hot surfaces.

B. The Contractor shall provide a separate insulated green ground wire inside each power branch circuit conduit. Connect one end of the ground wire to the ground bus or ground terminal in the panel board. Connect the other end of the ground wire to the grounding lug in equipment being served. Provide and install a grounding lug in equipment being served if no grounding lug exists.

C. Identify all temperature control raceways with labels stating "Control System Wiring." Typed (not handwritten) labels shall be affixed to the covers of all junction boxes and pull boxes.

### 3.3 RACEWAY SYSTEM

A. Power and Class 1 wiring may be run in the same conduit. Class 2 and 3 wiring and communications wiring may be run in the same conduit. Power and Class 1 may not be run together with Class 2, Class 3, or communications wiring.

B. No sensor wiring shall be run in the same conduit with power or Class 1 wiring.

C. Where different wiring classes terminate within the same enclosures, maintain clearances and install barriers per National Electric Code.

D. Pneumatic tubing may not be run in wiring conduit.

E. Wiring within air handling units shall be in a complete conduit system.

END OF SECTION

P:\13 PROJECTS\P13-0334-00MCHENRY\04 DESIGN\11 SPECS\CONSTRUCTION SPECS\23 0904-TEMPERATURE CONTROL WIRING.DOCX

**SECTION 23 0906**
**TEMPERATURE CONTROL DEMOLITION**

## PART 1 - GENERAL

### 1.1 SECTION INCLUDES

A. Miscellaneous Existing Controls

B. Demolition of Controls

### 1.2 SCOPE

A. Demolition of DDC and pneumatic control panels, devices and associated wiring, tubing and conduit for mechanical systems specified in this section.

### 1.3 SUBMITTALS

Not Applicable

## PART 2 - PRODUCTS

Not Applicable

## PART 3 - EXECUTION

### 3.1 MISCELLANEOUS EXISTING CONTROLS

A. Existing control equipment that is to remain is to be calibrated/adjusted for proper operation.

B. Any equipment found to be defective and requiring replacement shall be brought to the attention of Owner. Owner will be responsible for repairs to same.

C. Existing control equipment that is to remain shall be relocated to a new enclosure.

### 3.2 DEMOLITION

A. Demolition of the existing control systems shall be limited to those systems in which the temperature controls are to be replaced by this Project.

B. Demolition shall include removal of all existing components indicated to be replaced. This includes but is not limited to:

1. Chiller control panel components
2. Electric devices, wiring and conduit

   Note: Abandoned tubing and wiring, including conduit, shall be removed completely except where tubing or conduit are installed in inaccessible locations, such as within walls or floors. All tubing ends shall be capped. Above drop ceilings is considered to be inaccessible except that wiring and pneumatic tubing within or outside conduit is to be pulled out. Conduit is to remain in place.

C. Owner will inform the Contractor of any equipment to be removed that will remain the property of Owner. All other equipment removed shall be disposed of by the Contractor.

D. The Contractor shall insure that removed controls do not compromise the operation of the existing controls which remain.

E. The Contractor shall be required to make minor modifications to the existing control system such that when a portion of a control system is removed, the remaining system is left in a neat and orderly condition similar to the original installation.

1. Contractor shall maintain all fire and smoke control system interlocks on units where such exists.

F. Patch and seal any holes left in ductwork, walls, etc. after the existing controls have been removed.

END OF SECTION

P:\13 PROJECTS\P13-0334-00MCHENRY\04 DESIGN\11 SPECS\CONSTRUCTION SPECS\23 0906-TEMPERATURE CONTROL DEMOLITION.DOCX

**SECTION 23 2113**
**HYDRONIC PIPING AND SPECIALTIES**

## PART 1 - GENERAL

### 1.1 SCOPE OF WORK

A. Hydronic pipe and fitting materials, joining methods, valves, and specialties in this section include:

1. Chilled water piping

B. Services provided:

1. Pipe pressure testing

### 1.2 DEFINITIONS

A. CWP: Cold working pressure

B. EPDM: Ethylene propylene copolymer rubber

C. NBR: Acrylonitrile-butadiene, Buna-N, or nitrile rubber

D. NRS: Non-rising stem

E. OS&Y: Outside screw and yoke

F. PTFE: Polytetrafluoroethylene

G. RS: Rising stem

H. SWP: Steam working pressure

### 1.3 CODES AND STANDARDS (USE LATEST EDITIONS)

A. American Welding Society (AWS)

1. AWS A5.8: Specification for Filler Metals for Brazing and Braze Welding
2. AWS D1.1/D1.1M: Structural Welding Code - Steel
3. AWS D10.12/D10.12M: Guide for Welding Mild Steel Pipe

B. American Society of Mechanical Engineers (ASME)

1. ASME B1.20.1: Pipe Threads, General Purpose, Inch
2. ASME B16.1: Cast Iron Pipe Flanges and Flanged Fittings
3. ASME B16.3: Malleable Iron Threaded Fittings
4. ASME B16.4: Cast Iron Threaded Fittings
5. ASME B16.5: Pipe Flanges and Flanged Fittings, NPS1/2 to NPS24
~~5.~~6. ASME B16.10: Face-to-Face and End-to-End Dimensions of Valves
~~6.~~7. ASME B16.15: Cast Bronze Threaded Fittings.
~~7.~~8. ASME B16.18: Cast Copper Alloy Solder Joint Pressure Fittings.
~~8.~~9. ASME B16.21: Nonmetallic Flat Gaskets for Pipes Flanges
~~9.~~10. ASME B16.22: Wrought Copper and Copper Alloy Solder Joint Pressure Fittings
~~10.~~11. ASME B16.23: Cast Copper Alloy Solder Joint Drainage Fittings - DWV.
~~11.~~12. ASME B16.24: Bronze Flanges and Flanged Fittings.
~~12.~~13. ASME B16.29: Wrought Copper and Wrought Copper Alloy Solder Joint Drainage Fittings - DWV.
~~13.~~14. ASME B16.34: Valves – Flanged, Threaded and Welding End
~~14.~~15. ASME B16.39: Malleable Iron Threaded Pipe Unions
~~15.~~16. ASME B18.2.1: Square and Hex Bolts and Screws - Inch Series

~~16.~~17. ASME B31 Series: Code for Pressure Piping
~~17.~~18. ASME B31.1: Power Piping
~~18.~~19. ASME B31.9: Building Services Piping
~~19.~~20. ASME Boiler and Pressure Vessel Code: Section IV, "Heating Boilers"; Section VIII, "Pressure Vessels," Division 1; Section IX, "Welding and Brazing Qualifications"

C. American Society for Testing Materials (ASTM)

1. ASTM A 47/A 47M: Specification for Ferritic Malleable Iron Castings
2. ASTM A48/A 48M: Specification for Gray Iron Castings
3. ASTM A 53/A 53M: Specification for Pipe, Steel, Black and Hot-Dipped, Zinc-Coated, Welded and Seamless
4. ASTM A 106: Specification for Seamless Carbon Steel Pipe for High-Temperature Service
5. ASTM A 126: Specification for Gray Iron Castings for Valves, Flanges, and Pipe Fittings
6. ASTM A 234/A 234M: Specification for Piping Fittings of Wrought Carbon Steel and Alloy Steel for Moderate and High Temperature Services
7. ASTM A 307: Specification for Carbon Steel Bolts and Studs, 60 000 PSI Tensile Strength
8. ASTM A 395/A 395M: Specification for Ferritic Ductile Iron Pressure-Retaining Castings for Use at Elevated Temperatures
9. ASTM A 536: Specification for Ductile Iron Castings
10. ASTM A 733: Specification for Welded and Seamless Carbon Steel and Austenitic Stainless Steel Pipe Nipples
11. ASTM B 32: Specification for Solder Metal
12. ASTM B 61: Specification for Steam or Valve Bronze Castings
13. ASTM B 62: Specification for Composition Bronze of Ounce Metal Castings
14. ASTM B 75: Specification for Seamless Copper Tube
15. ASTM B 88: Specification for Seamless Copper Water Tube
16. ASTM B 306: Standard Specification for Copper Drainage Tube (DWV)
17. ASTM B 584: Specification for Copper Alloy Sand Castings for General Applications
18. ASTM B 813: Specification for Liquid and Paste Fluxes for Soldering Applications of Copper and Copper Alloy Tube
19. ASTM B 828: Practice for Making Capillary Joints by Soldering of Copper and Copper Alloy Tube and Fittings
20. ASTM D 1785: Specification for PolyVinyl Chloride (PVC) Plastic Pipe, Schedules 40, 80, and 120
21. ASTM D 2466: Specification for PolyVinyl Chloride (PVC) Plastic Pipe Fittings, Schedule 40
22. ASTM D 2467: Specification for PolyVinyl Chloride (PVC) Plastic Pipe Fittings, Schedule 80
23. ASTM D 2564: Specification for Solvent Cements for PolyVinyl Chloride (PVC) Plastic Piping Systems
24. ASTM D 2672: Specification for Joints for IPS PVC Pipe Using Solvent Cement
25. ASTM D 2846/D 2846M: Specification for Chlorinated Poly(Vinyl Chloride) (CPVC) Plastic Hot- and Cold-Water Distribution Systems

26. ASTM D 2855: Practice for Making Solvent-Cemented Joints with Poly(Vinyl Chloride) (PVC) Pipe and Fittings
27. ASTM F 402: Practice for Safe Handling of Solvent Cements, Primers, and Cleaners Used for Joining Thermostatic Pipe and Fittings
28. ASTM F 438: Specification for Socket-Type Chlorinated PolyVinyl Chloride (CPVC) Plastic Pipe Fittings, Schedule 40
29. ASTM F 439: Specification for Socket-Type Chlorinated PolyVinyl Chloride (CPVC) Plastic Pipe Fittings, Schedule 80
30. ASTM F 441/F 441M: Specification for Chlorinated PolyVinyl Chloride (CPVC) Plastic Pipe, Schedules 40 and 80
31. ASTM F 493: Specification for Solvent Cements for Chlorinated PolyVinyl Chloride (CPVC) Plastic Pipe and Fittings
32. ASTM F 656: Specification for Primers for Use in Solvent Cement Joints of Poly (Vinyl Chloride) (PVC) Plastic Pipe and Fittings

D. American Water Works Association (AWWA)

1. AWWA C606: Grooved and Shouldered Joints

E. Brazing Handbook.

F. Manufacturers Standardization Society (MSS)

1. MSS SP-45: Bypass and Drain Connections
2. MSS SP-58: Pipe Hangers and Supports - Materials, Design and Manufacture
3. MSS SP-67: Butterfly Valves
4. MSS SP-68: High Pressure Butterfly Valves with Offset Design
5. MSS SP-70: Cast Iron Gate Valves, Flanged and Threaded Ends
6. MSS SP-71: Gray Iron Swing Check Valves, Flanged and Threaded Ends
7. MSS SP-72: Ball Valves with Flanged of Butt-Welding Ends for General Service
8. MSS SP-78: Cast Iron Plug Valves, Flanged and Threaded Ends
9. MSS SP-80: Bronze Gate, Globe, Angle and Check Valves
10. MSS SP-85: Gray Iron Globe and Angle Valves, Flanged and Threaded Ends
11. MSS SP-107: Transition Union Fittings for Joining Metal and Plastic Products
12. MSS SP-108: Resilient-Seated Cast Iron-Eccentric Plug Valves
13. MSS SP-110: Ball Valves, Threaded, Socket-Welding, Solder Joint, Grooved and Flared Ends
14. MSS SP-122: Plastic Industrial Ball Valves
15. MSS SP-125: Gray Iron and Ductile Iron In-Line, Spring-Loaded, Center-Guided Check Valves

## 1.4 QUALITY ASSURANCE

A. Pipe: Each length of pipe shall be legibly identified at mill by paint, stenciling, or raised symbols identifying manufacturer and class type or schedule of pipe. Copper pipe shall be identified at 3 foot intervals.

B. Fittings: To be identified by the manufacturer by permanently attached tags, imprints, or other approved means, indicating the class of wall thickness and material.

C. Valves: Manufacturer's name and pressure rating marked on valve body.

D. Comply with ASME B31.9, "Building Services Piping," for materials, products, and installation. Safety valves and pressure vessels shall bear the appropriate ASME label.

E. Fabricate and stamp air separators and expansion tanks to comply with ASME Boiler and Pressure Vessel Code: Section VIII, Division 01.

F. Welding Materials and Procedures: Conform to ANSI/ASME SEC 9 and applicable state labor regulations.

1. Comply with provisions in ASME B31 Series, "Code for Pressure Piping."
2. Certify that each welder has passed AWS qualification tests for welding processes involved and that certification is current.

G. Steel Support Welding: Qualify processes and operators according to AWS D1.1/D1.1M, "Structural Welding Code - Steel."

H. Qualifications for Fiberglass Pipe and Fitting Installers: Installers of RTRF and RTRP shall be certified by the manufacturer of pipes and fittings as having been trained and qualified to join fiberglass piping with manufacturer-recommended adhesive.

I. All grooved piping products shall be supplied by a single manufacturer. Grooving tools shall be of the same manufacturer as the grooved components. Grooving procedures shall be in accordance with the manufacturer's current listed standards conforming to ANSI/AWWA C606.

**1.5 SUBMITTALS**

A. Product Data: Submit for each type of the products as listed below. Include component sizes, rough-in requirements, service sizes, and finishes. Include product description, model, and dimensions.

1. Pipe materials and fittings
2. Valves: Include flow and pressure drop curves based on manufacturer's testing for calibrated balancing valves and automatic flow control valves.
3. Air control devices
4. Hydronic specialties

B. Shop Drawings: For all new piping systems submit layout drawings at ¼" – 1'-0" scale in both hard-copy and AutoCAD compatible format. Shop drawings shall include, but not be limited to:

1. Piping layout indicating sizes and locations
2. Elevations of piping
3. Slopes of horizontal piping
4. Wall and floor penetrations
5. Pressure rating for each service
6. Penetrations through fire-rated and other partitions, floors, etc.
7. Equipment installation and connections based on the equipment being used on the Project
8. Hangers and supports including multiple pipe hangers
9. Location of alignment guides, expansion joints, and anchors, including attachment to building structure
10. Shop drawings shall show other building and building system components for coordination purposes. Input from other installers shall be obtained. Any proposed changes to piping layout required for coordination purposed shall be indicated. Coordination items shown shall include but no be limited to:

a. Any pipe (e.g. sprinkler, plumbing pipes, roof drains, etc.) in vicinity of hydronic piping

b. Electrical equipment, duct banks, and conduit

c. Structural members, including structural members to which piping supports and anchors will be attached

C. Pipe Testing Submittals and Reports

1. Submit documentation of pipe pressure testing and submit test result reports within two weeks of testing.

2. Contractor shall be responsible for any corrective action required due to a failed pipe pressure test.

D. Manufacturer's Installation Instruction: Submit manufacturer's installation instructions for all manufactured products and assemblies required for this project.

E. Welding certificates

F. Operation and Maintenance Data: Include installation instruction, assembly views, lubrication instructions, and replacement parts list. For air control devices, hydronic specialties, and special-duty valves to include in emergency, operation, and maintenance manuals.

G. Final Record Drawings

1. During the construction process, the Contractor shall maintain a set of drawings showing the exact routing and location of piping systems being installed. The drawing shall be updated neatly by hand on a daily basis and account for routing modifications made in the field. Contractor shall use these drawing as a basis for generating the project as-built drawings.

H. As-Built Drawings

1. Upon completion of project, Contractor shall furnish as-built drawings showing in scale the exact routing and locations of all newly installed piping systems. Submit in both hard-copy and electronic AutoCAD format.

**1.6 DELIVERY, STORAGE AND HANDLING**

A. Protect new pipe interiors from moisture, construction debris and dust, and other foreign materials with the use of plastic end caps/plugs on each end of pipe. Maintain end-caps/plugs in place until piping is installed.

B. Store materials indoors, protected from the weather. Where exterior storage is necessary, elevate piping above grade and enclose with waterproof wrapping or cover.

C. Deliver and store valves in shipping containers with labeling in place.

D. Replace any piping or devices which are damaged during shipping or storage.

**1.7 SPARE PARTS**

Not Applicable

**1.8 WARRANTY**

A. One year warranty on products and complete installation commencing at the time of Substantial Completion

**1.9 MAINTENANCE**

Not Applicable

## PART 2 - PRODUCTS

### 2.1 CHILLED WATER PIPING, ABOVE GRADE

A. Steel Pipe: ASTM A53/A53M, Grade B, Type E or S, Schedule 40, black steel with plain ends. Pipe 12" and over shall be standard weight, 0.375" wall thickness.

1. Fittings and Joints

   a. 2" and smaller: ANSI/ASTM B16.3 Class 150 malleable iron or ANSI/ASTM B16.4 Class 125 cast iron fittings. Threaded joints.
   b. 2-1/2" and larger: ASTM A234, wrought steel welding type fittings. ANSI/AWS D1.1 welded joints.

2. Flanges and Flanged Fittings

   a. ANSI/ASME B16.1, Class 125 raised face cast iron flanges
   b. ANSI/ASME B16.5, Class 150 forged steel, raised face, welding neck flanges
   c. Flanges to match those on valves and equipment
   d. Slip-on steel flanges not allowed.

### 2.2 FLANGES, UNIONS AND COUPLINGS

A. Steel Pipe

1. Unions 2" and Smaller: ANSI/ASME B16.39 malleable iron unions for threaded pipe, ground joint, screwed bronze or brass to iron. Pressure class and joint type of union shall be equal to that specified for fittings of respective piping service.
2. Flanges 2 ½" and Larger: ANSI/ASME B16.5, forged steel, raised face, welding neck flanges. Pressure class and joint type of flange shall be equal to that specified for fittings of respective piping service.
3. Slip-on flanges are <u>not</u> allowed.

B. Flanges to match those on valves and equipment.

C. Flange Bolts and Nuts: ASME B18.2.1, carbon steel, unless otherwise indicated

D. Pipe-Flange Gasket Materials

1. Suitable for chemical and thermal conditions of piping system contents.
2. ASME B16.21, nonmetallic, flat, asbestos free, 1/8" maximum thickness unless thickness or specific material is indicated.

   a. Full-Face Type: For flat-face, Class 125, cast-iron and cast-bronze flanges
   b. Narrow-Face Type: For raised-face, Class 250, cast-iron and steel flanges

### 2.3 DIELECTRIC FITTINGS

A. Dielectric Nipples 4" and Smaller

1. Acceptable Manufacturers: Flow Design Inc., Perfection Corporation, Victaulic.
2. Electroplated steel nipple with inert and non-corrosive thermoplastic lining; threaded or grooved ends, 300-psig minimum working pressure at 225°F meeting the requirements of ASTM F-492. Clearflow dielectric waterway fittings as manufactured by Perfection Corporation.

### 2.4 GLOBE VALVES

A. Acceptable Manufacturers

1. Crane

2. Hammond
3. Milwaukee
4. Nibco

B. Up to 2″: Class 150, 300 psig CWP rated, manufactured in accordance with MSS-SP-80. ASTM B62 bronze body, union bonnet, bronze trim, rising bronze stem, malleable iron handwheel, asbestos free packing, renewable composition PTFE of TFE disc, screwed ends. Model 590T manufactured by Milwaukee.

C. 2 ½″ and greater: Class 125, 200 psig CWP rated manufactured in accordance with MSS-SP-85. ASTM A126 iron body, bolted bonnet, bronze trim, rising stem, cast iron handwheel, asbestos free packing OS&Y, solid disc, flanged end. Model F-2981-M manufactured by Milwaukee.

**2.5 BALL VALVES**

A. Acceptable Manufacturers

1. Apollo
2. Crane
3. Hammond
4. Milwaukee
5. Nibco
6. Watts Regulator

B. Up to 2 ½″: 600 psi CWP rated, manufactured in accordance with MSS-SP-110. Two-piece bronze body, stainless steel full port vented ball, PTFE or TFE seats, lever handle and threaded ends. Model T-585-70-66 manufactured by Nibco.

C. Ball valves mounted in insulated pipes shall have 2″ extended stems of non-thermal conductive material to clear pipe covering, and a protective sleeve that allows operation of the valve without breaking the vapor seal or disturbing insulation.

**2.6 BUTTERFLY VALVES – RESILIENT SEATED**

A. Acceptable Manufacturers

1. Bray
2. DeZurik
3. Keystone/Tyco
4. Milwaukee
5. Nibco

B. Standard Pressure Butterfly Valves:

1. 2 ½″ to 6″: 175 psi close off pressure at temperatures up to 225°F, manufactured in accordance with MSS-SP-67, suitable for bi-directional dead-end service at rated pressure without use of downstream flange. Cast iron or ductile iron body with lug ends, aluminum bronze or Nylon 11 coated ductile iron disc, blowout proof stainless steel stem, peroxide cured EPDM seat bonded or vulcanized to the body, for service to 250°F, extended neck for insulating, 10 position lever handle for valves up to 6″ in size. Series 31 manufactured by Bray.
2. Valves 8″ and larger shall be furnished with handwheel and gear drive.
3. Valves 14-20″: Same as above, except 150 psi rated at temperatures up to 225°F.

C. Provide chain operators for valves 8″ and over installed 8′-0″ or more above floor in mechanical rooms.

## 2.7 AIR VENTS

A. Acceptable Manufacturers

1. Amtrol
2. Armstrong
3. Bell and Gossett
4. Taco

B. Manual Type: Bronze body, threaded inlet connection, with ⅛" brass needle valve at top of chamber. Class 125, 150 psig CWP rated, maximum operating temperature 225°F.

C. Automatic Float Type: Bronze or cast iron body, stainless steel float, stainless steel valve and valve seat. Class 125, 150 psig CWP rated, maximum operating temperature 225°F. Model 107A manufactured by Bell and Gossett.

# PART 3 - EXECUTION

## 3.1 INSTALLATION

A. Drawing plans, schematics, and diagrams indicate general location and arrangement of piping systems. Indicated piping locations and arrangements were used to size pipe and calculate friction loss, expansion, pump sizing, and other design considerations. Install piping as indicated unless deviations to layout are approved on Coordination Drawings.

B. Install piping in concealed locations, unless otherwise indicated and except in equipment rooms and service areas.

C. Install piping indicated to be exposed and piping in equipment rooms and service areas at right angles or parallel to building walls. Diagonal runs are prohibited unless specifically indicated otherwise.

D. Install piping to permit valve servicing.

E. Install piping at indicated slopes. Install piping at a uniform grade of 0.2 percent upward in direction of flow when not other slope is indicated on the drawings.

F. Install piping free of sags and bends.

G. Install fittings for changes in direction and branch connections.

H. Install piping to allow application of insulation.

I. Install groups of pipes at common elevations, parallel to each other, spaced to permit applying insulation and servicing of valves.

J. Reduce pipe sizes using eccentric reducer fitting installed with level side up.

K. Install branch connections to mains using tee fittings in main pipe, with the branch connected to the bottom of the main pipe. For up-feed risers, connect the branch to the top of the main pipe.

1. The use of saddle or "cut-in" connections is NOT allowed.
2. The use of T-Drill connections is NOT allowed.

L. The use of bullhead tee connections, where two opposite flows join to a common perpendicular outlet, is NOT allowed.

M. Install piping to allow for expansion and contraction without stressing pipe, joints, or connected equipment.

N. Install pipe wells for temperature controls sensors and instrumentation. Coordinate with temperature controls contractor.

O. Pipe Joint Construction

1. Ream pipe and tube ends. Remove burrs. Bevel plain end ferrous pipe.
2. Remove scale, slag, dirt, and debris from inside and outside of pipe and fittings before assembly.
3. Soldered Joints: Apply ASTM B 813, water-flushable flux, unless otherwise indicated, to tube end. Construct joints according to ASTM B 828 or CDA's "Copper Tube Handbook," using lead-free solder alloy complying with ASTM B 32.
4. Brazed Joints: Construct joints according to AWS's "Brazing Handbook," "Pipe and Tube" Chapter, using copper-phosphorus brazing filler metal complying with AWS A5.8.
5. Threaded Joints: Thread pipe with tapered pipe threads according to ASME B1.20.1. Cut threads full and clean using sharp dies. Ream threaded pipe ends to remove burrs and restore full ID. Join pipe fittings and valves as follows:
    a. Apply appropriate tape or thread compound to external pipe threads unless dry seal threading is specified.
    b. Damaged Threads: Do not use pipe or pipe fittings with threads that are corroded or damaged. Do not use pipe sections that have cracked or open welds.
6. Welded Joints: Construct joints according to AWS D10.12/D10.12M, using qualified processes and welding operators according to Part 1 "Quality Assurance" Article.
7. Flanged Joints: Select appropriate gasket material, size, type, and thickness for service application. Install gasket concentrically positioned. Use suitable lubricants on bolt threads.
8. Plastic Piping Solvent-Cemented Joints: Clean and dry joining surfaces. Join pipe and fittings according to the following:
    a. Comply with ASTM F 402 for safe-handling practice of cleaners, primers, and solvent cements.
    b. CPVC Piping: Join according to ASTM D 2846/D 2846M Appendix.
    c. PVC Pressure Piping: Join ASTM D 1785 schedule number, PVC pipe and PVC socket fittings according to ASTM D 2672. Join other-than-schedule number PVC pipe and socket fittings according to ASTM D 2855.
    d. PVC Non-Pressure Piping: Join according to ASTM D 2855.

P. Coordination of mechanical work installation and access requirements:

1. Provide access where valves and fittings are not exposed. Coordinate size and location of access doors with Owner and General Contractor.
2. Where pipes are to be installed in partitions, furred out spaces and chases, obtain information as to their exact location and size and install work so as to be entirely concealed in allotted space.
3. Furnish advance information on locations and sizes of frames, boxes, sleeves and openings needed for work and also furnish information and shop drawings necessary to permit installation of other work without delay.

4. Where there is evidence that parts of Mechanical Work will interfere with other work, assist in working out space conditions and/or structure, and make necessary adjustments to accommodate work.
5. Mechanical Work installed before coordinating with other work so as to cause interference with other work to be changed to correct such condition without additional cost to Owner.
6. Install Mechanical work to permit removal (without damage to other parts) of coils, heat exchangers, pumps, fan shafts and wheels, belt guards, sheaves and drives and other parts requiring periodic replacement or maintenance.
7. Arrange pipes, ducts and equipment to permit ready access to valves, cocks, traps, starters, motors, dampers, control components and to clear the openings of swinging and overhead doors and of access panels.
8. Provide access panels in equipment, ducts and like items for inspection of interiors and proper maintenance.

Q. Appliances and equipment to be installed and connected with best engineering practices and in accordance with manufacturer's instructions and recommendations. Piping, valves, connections and other like items recommended by manufacturer or as required for proper operation to be provided without additional cost to Owner.

R. In no case will any pipe, conduit or duct be installed where it is supported on or suspended from another pipe, conduit or duct.

S. Follow manufacturers' directions in installation and operation of all equipment and materials.

T. Indirect waste lines, cooling coil drain pan lines, overflow pipes, relief valve discharge pipes, etc. shall have ends beveled at 45° angle to minimize splashing.

U. After completion or piping installation, clean, flush, and treat systems. Coordinate with chemical treatment requirements; refer to Division 23 Section 23 2500, "Pipe Cleaning, Flushing, and Chemical Treatment."

V. Valves

1. Examine valve interior for cleanliness. Clean or replace as required.
2. Remove special packing materials from valves.
3. Operate valves in positions from fully open to fully closed. Examine guides and seats made accessible by valve operation.
4. Install valves with stems upright or horizontal, not inverted.
5. Install valves in position to allow full movement and operation.
6. Install chainwheels on operators for butterfly and other shut-off valves sizes 8" and over, installed 8'-0" or more above floor in mechanical rooms.
7. Install swing check valves in horizontal position with hinge pin level.

**3.2 APPLICATIONS**

A. Select system components with pressure rating equal to or greater than system operating pressure.

B. Install unions in piping 2" and smaller, adjacent to valves, at final connections of equipment, and elsewhere as indicated.

C. Install flanges in piping 2½" and larger, at final connections of equipment and elsewhere as indicated.

D. Install drains, consisting of a tee fitting, ¾″ ball valve, and short threaded nipple with cap, at main shut-off valves, low points of piping, bases of vertical risers, at equipment and elsewhere as required for system drainage.

E. Provide manual air vents where shown on drawings and all high point of water systems, at heat transfer coils and elsewhere as required for air venting. Where large air quantities can accumulate in piping systems, provide enlarged air collection chambers.

F. Provide non-conducting dielectric fittings wherever joining dissimilar metals.

G. Piping to equipment shall be installed full size as indicated on the plans. If equipment connections differ from piping shown on the drawings, provide reducers/increasers at all valves, devices, and equipment as required.

**3.3 WELDING**

A. All welding shall be performed by experienced welders in a neat and workmanlike manner. Welding done on piping, pressure vessels and structural steel under this section shall be performed only by persons who are currently qualified in accordance with ANSI Standard Code for Pressure Piping, Section I, Power Piping, Bulletin ANSI B31.1.0-1980; applicable portions of ASME Boiler and Pressure Vessel Code, Section I, Power Boilers, and Section IX, Welding Qualifications. Submit for approval and record certified copies of Procedure Specification for Welding, Welding Procedure Qualification Tests and Welder Performance Qualification Tests. Welding specifications and qualification tests shall be recorded on Forms Q-1 as recommended in Appendix II of Section IX of the ASME Boiler and Pressure Vessel Code. Records shall be certified by Contractor and shall be accessible to authorized inspector.

B. Bevel piping on both ends before welding as required and defined in Code.

C. Use following weld spacing on all butt-welds:

| Nominal Pipe Wall Thickness | Space |
|---|---|
| ¼″ or less | ⅛″ |
| Over ¼″ or less than ¾″ | 3/16″ |
| ¾″ and over | 3/16″ |

D. Use backing rings on welds in all piping 10″ and larger.

E. Where welding branches or connections are taken from a branch or main and the branch or connection pipe size is the same diameter as the main, a welding tee must be installed in the main for the branch or connection. Saddle or cut-in connections are NOT allowed.

F. Where branches or connections are made to a welded main and the branch or connection is a minimum of two pipe sizes less than the diameter of the main, and the branch is 2 ½″ and larger, install a Bonney-Forge weldolet at the branch connection to the main. Where the branch or connection is 2″ and smaller, install a Bonney-Forge threadolet at the branch connection to the main. Screwed couplings, half couplings or screwed nipples welded to mains for screwed branches will not be permitted.

G. The method of attaching weldolet or threadolet units to the piping shall be in strict accordance with the ANSI Code for Pressure Piping, B31.1.

H. Before start of any welding, remove all corrosion and other foreign material from surface to be welded.

I. Welding shall be performed by either manual shielded metallic arc process or automatic submerged arc process. Use direct current exclusively.

J. Electrodes to be used with manual shielded metallic arc method shall conform to ASTM A-233, Classification E-6010.

K. Size of electrodes, voltages, current, thickness, and number of passes or beads shall be in accordance with provisions of previous paragraph.

L. After deposition, clean each layer of weld metal to remove all slab and scale by wire brushing or grinding, then chip where necessary to prepare for proper deposition of next layer.

M. Weld reinforcement shall be not less than 1/16" or more than ⅛" above normal surface of joined sections. Reinforcement shall be crowned at center and shall taper on each side to surface being joined. Exposed surface of weld shall present workmanlike appearance and shall be free of depressions below surface of joined members.

N. No welding of any kind shall be done when temperature of base metal is lower than 0°F. Material to be welded during freezing temperatures shall be made warm and dry before welding is started. Temperature of metal shall be "warm to hand" – or approximately 60°F.

O. All welders engaged in work performed under this Section shall have been qualified in accordance with test requirements of Section IX of the ASME Boiler and Pressure Vessel Code. Each operator shall identify his production welds by marking his regularly assigned identification number or mark within 1" of weld. Contractor shall submit complete list of individual numbers of identifying marks and operator's name, and a copy of each operator's certificate.

**3.4 TESTING**

A. Furnish all labor, material, instruments, supplies and services and bear all costs for the accomplishment of tests herein specified. Correct all defects appearing under test and repeat the tests until no defects are disclosed; leave the equipment clean and ready for use.

B. Field test all piping before start-up of systems. Tests of piping systems shall be conducted before connections to equipment are made and before piping is covered, buried or otherwise concealed.

C. Perform all tests other than herein specified which may be required by legal authorities or by agencies to whose requirements this work is to conform.

D. Furnish all necessary testing apparatus, make all temporary connections and perform all testing operations required, at no additional cost to Owner.

E. No work shall be insulated, painted, backfilled or concealed until authorized by Owner's representative and/or the Engineer representative.

F. Inform Engineer and Owner's representative 48 hours prior to when work is ready for test.

G. Systems found to have leaks shall be subjected to further tests when faulty joints have been repaired or replaced.

H. Prepare hydronic piping according to ASME B31.9 and as follows:

1. Leave joints, including welds, uninsulated and exposed for examination during test.

2. Provide temporary restraints for expansion joints that cannot sustain reactions due to test pressure. If temporary restraints are impractical, isolate expansion joints from testing.
3. Flush hydronic piping systems with clean water; then remove and clean or replace strainer screens.
4. Isolate equipment from piping. If a valve is used to isolate equipment, its closure shall be capable of sealing against test pressure without damage to valve. Install blinds in flanged joints to isolate equipment.
5. Install safety valve, set at a pressure no more than one-third higher than test pressure, to protect against damage by expanding liquid or other source of overpressure during test.

I. Perform the following tests on hydronic piping:

1. Use ambient temperature water as a testing medium unless there is risk of damage due to freezing. Another liquid that is safe for workers and compatible with piping may be used.
2. While filling system, use vents installed at high points of system to release air. Use drains installed at low points for complete draining of test liquid.
3. Isolate expansion tanks and determine that hydronic system is full of water.
4. Subject piping system to hydrostatic test pressure that is not less than 1.5 times the system's working pressure. Test pressure shall not exceed maximum pressure for any vessel, pump, valve, or other component in system under test. Verify that stress due to pressure at bottom of vertical runs does not exceed 90 percent of specified minimum yield strength or 1.7 times "SE" value in Appendix A in ASME B31.9, "Building Services Piping."
5. After hydrostatic test pressure has been applied for at least 10 minutes, examine piping, joints, and connections for leakage. Eliminate leaks by tightening, repairing, or replacing components, and repeat hydrostatic test until there are no leaks.
6. Prepare written report of testing. Submit to Owner and Engineer.

J. Perform the following before operating the system:

1. Open manual valves fully.
2. Inspect pumps for proper rotation.
3. Set makeup pressure-reducing valves for required system pressure.
4. Inspect air vents at high points of system and determine if all are installed and operating freely (automatic type), or bleed air completely (manual type).
5. Set temperature controls so all coils are calling for full flow.
6. Inspect and set operating temperatures of hydronic equipment, such as boilers, chillers, and cooling towers, to specified values.
7. Verify lubrication of motors and bearings.

K. Test pressures shall be increased if necessary to comply with applicable codes.

END OF SECTION

P:\13 PROJECTS\P13-0334-00MCHENRY\04 DESIGN\11 SPECS\CONSTRUCTION SPECS\23 2113-HYDRONIC PIPING AND SPECIALTIES.DOCX

# SECTION 23 2500
# PIPE CLEANING, FLUSHING AND CHEMICAL TREATMENT

## PART 1 - GENERAL

### 1.1 SECTION INCLUDES

A. Cleaning of piping systems

B. Chemical feeder equipment

C. Treatment for closed systems

### 1.2 SUBMITTALS

A. Submit product data indicating chemical treatment materials, chemicals and equipment. These items shall match Owner's existing standards.

B. Submit manufacturer's installation instructions.

C. Submit manufacturer's field reports.

D. Submit reports indicating start-up of treated systems have been completed and are operating properly.

E. Submit reports indicating analysis of system water after cleaning and after treatment.

### 1.3 OPERATION AND MAINTENANCE DATA

A. Include data on chemical feed pumps, agitators and other equipment including spare parts lists, procedures and treatment programs.

B. Include step by step instructions on test procedures including target concentrations.

### 1.4 QUALIFICATIONS

A. Manufacturer: Company specializing in manufacturing the products specified in this Section with minimum three years experience. Company shall have local representatives with water analysis laboratories and full time service personnel.

### 1.5 REGULATORY REQUIREMENTS

A. Conform to applicable code for addition of non-potable chemicals to building mechanical systems and for discharge to public sewage systems.

### 1.6 MAINTENANCE SERVICE

A. Furnish service and maintenance of treatment systems for one year from Date of Substantial Completion.

B. Provide on-site inspections of equipment during scheduled shutdown to properly evaluate success of water treatment program and make recommendations in writing based upon these inspections.

### 1.7 MAINTENANCE MATERIALS

A. Provide sufficient chemicals for treatment and testing during warranty period.

## PART 2 - PRODUCTS

### 2.1 MANUFACTURERS

A. Gehrke Technology Group – Wauconda, IL

## 2.2 MATERIALS

A. All materials proposed must be compatible with existing treatment systems and chemicals.

B. System Cleaner:

1. Liquid alkaline compound with emulsifying agents and detergents to remove grease and petroleum products.
2. Algaecide.

C. Closed System Treatment (Water):

1. Sequestering agent to reduce deposits and adjust pH.
2. Corrosion inhibitors.
3. Conductivity enhancers.

## 2.3 EQUIPMENT

Not Applicable

# PART 3 - EXECUTION

## 3.1 PREPARATION

A. Systems shall be operational, filled, started and vented prior to cleaning. Use water meter to record capacity in each system.

B. Place terminal control valves in OPEN position during cleaning.

## 3.2 CLEANING SEQUENCE

A. Add cleaner to closed systems at concentration as recommended by manufacturer.

B. Chilled Water Systems: Circulate for 48 hours, then drain systems as quickly as possible. Refill with clean water, circulate for 24 hours, then drain. Refill with clean water and repeat until system cleaner is removed.

C. Remove, clean and replace strainer screens.

D. Inspect, remove sludge and flush low points with clean water after cleaning process is completed. Include disassembly of components as required.

## 3.3 INSTALLATION

A. Install in accordance with manufacturer's instructions and with Owner's present practice.

## 3.4 CLOSED SYSTEM TREATMENT

A. Provide one bypass feeder on each system.

B. Introduce closed system treatment through bypass feeder when required or indicated by test.

C. Provide ¾" water coupon rack around circulating pumps with space for four

## 3.5 FIELD INSPECTION AND REPORT

A. Provide report, in accordance with Division 01 Section 01 4000, "Quality Requirements," prepared by manufacturer's representative, stating that systems installed and services provided under this Section are in accordance with manufacturer's recommendations and are properly operating.

END OF SECTION

P:\13 PROJECTS\P13-0334-00MCHENRY\04 DESIGN\11 SPECS\CONSTRUCTION SPECS\23 2500-PIPE CLEANING, FLUSHING & CHEM TREATMENT.DOCX

**SECTION 23 6423**
**AIR-COOLED CHILLERS**

## PART 1 - GENERAL

### 1.1 SCOPE OF WORK

A. Products provided in this section include:

1. Air-cooled chillers between 150 and 500 nominal tons
2. Charge of refrigerant and oil
3. Building automation system (BAS) interface
4. Vibration isolators
5. Sound attenuation package(s)

B. Services provided in this section include:

1. Factory functional testing
2. Manufacturer's field services
3. BAS integration
4. Maintenance agreement

C. Chillers are purchased by the Owner and assigned to the Contractor for installation. Refer to drawing notes and Division 01 for Contractor requirements for Owner purchased equipment.

### 1.2 DEFINITIONS

Not Applicable

### 1.3 CODES AND STANDARDS (UTILIZE MOST RECENT VERSION)

A. Air-Conditioning, Heating, and Refrigeration Institute (AHRI)

1. AHRI 370: Sound Performance Rating of Large Air-Cooled Outdoor Refrigerating and Air-Conditioning Equipment
2. AHRI 550/590: Water Chilling Packages Using the Vapor Compression Cycle

B. American Society of Heating, Refrigerating, and Air-Conditioning Engineers

1. ASHRAE 15: Safety Standard for Refrigeration Systems
2. ASHRAE 34: Designation and Safety Classifications of Refrigerants
3. ASHRAE 90.1: Energy Standard for Buildings except Low-Rise Residential Buildings
4. ASHRAE 147: Reducing the Release of Halogenated Refrigerants from Refrigerating and Air-Conditioning Equipment and Systems

C. American Society of Mechanical Engineers (ASME) Section VIII: Boiler and Pressure Vessel Code

D. American Society for Testing and Materials (ASTM) B-117: Standard Practice for Operating Salt Spray (Fog) Apparatus

E. Institute of Electrical and Electronic Engineers (IEEE) 519: IEEE Recommended Practices and Requirements for Harmonic Control in Electrical Power Systems

F. International Organization for Standardization (ISO) 9001: Standard for Manufacturing Quality

G. National Fire Protection Association (NFPA) 70: National Electric Code (NEC)

H. National Electrical Manufacturers Association (NEMA)

1. NEMA 250: Enclosures for Electrical Equipment
2. NEMA AB-1: Molded-Case Circuit Breakers, Molded Case Switches, and Circuit Breaker Enclosures
3. NEMA ICS 2: Industrial Control and Systems: Controllers, Contactors, and Overload Relays
4. NEMA ICS 6: Industrial Control and Systems: Enclosures
5. NEMA KS 1: Enclosed and Miscellaneous Distribution Equipment Switches
6. NEMA MG 1: Motors and Generators

I. Occupational Safety and Health Act (OSHA)

J. Underwriters Laboratories Inc. (UL) 1995: Heating and Cooling Equipment

**1.4 QUALITY ASSURANCE**

A. Conform to all national, state, and local codes.

B. Conform to Intertek Testing services for construction of chillers and provide ETL/cETL Listed compliance label.

C. Comply with UL and UL Canada and include a compliance label by a qualified testing agency.

D. Chiller components shall be constructed, tested, and stamped in accordance with applicable ASME codes.

E. Conform to ASHRAE 15: Safety Code for Mechanical Refrigeration.

F. Conform to NFPA 70: National Electrical Code.

G. Chiller shall be manufactured in a facility registered to ISO 9001 or ISO 9002.

H. Chiller performance shall be rated and certified in accordance with AHRI 550/590.

I. Chiller sound data shall be rated and certified in accordance with AHRI 370.

J. Chiller painted components shall be capable of withstanding 500 hour salt spray test in accordance with ASTM B-117.

K. Chiller shall be functionally tested at the factory with water flowing through the chiller.

L. Chiller startup services shall be performed by factory trained personnel.

**1.5 SUBMITTALS (SUBMIT WITH BID)**

A. Submittals shall indicate components, dimensions, weights and point loads, required clearances and location and size of field connections.

B. Provide product data indicating rated capacities, specialties and accessories, electrical requirements and wiring diagrams.

C. Submit complete performance and sound data at full and part load capacities per the table below. In addition, provide full load and part load ratings at AHRI conditions.

D. Submit manufacturer's installation and operation instructions and spare parts list.

**1.6 DELIVERY, STORAGE AND HANDLING**

A. Comply with manufacturer's installation instructions for storage, rigging, unloading and transporting units.

B. Provide protective covering over entire chiller and piping connections. Protective covering shall remain until chiller is installed.

C. Unit controls shall be capable of withstanding 150°F storage temperature in the control compartment.

**1.7 SPARE PARTS**

A. Provide recommended spare parts list as part of submittal package.

**1.8 WARRANTY**

A. Provide one (1) year parts and labor warranty on chiller package including materials, labor, and refrigerant from date of startup.

**1.9 MAINTENANCE SERVICE**

A. Furnish service and maintenance for one year from **date of startup**.

B. The maintenance agreement shall cover all preventive maintenance and service during regular work hours as outlined below:

1. Cooling Season Preparation and Inspection

   a. Check refrigerant and oil levels.
   b. Check oil sump, oil heaters and temperatures.
   c. Check and test all operating and safety controls.
   d. Check the starter operation.
   e. Start the chilled water pump.
   f. Start the chiller and calibrate controls.
   g. Leak check the unit and identify leak sources for repair.
   h. Log operating conditions after system and unit stabilized.
   i. Review operating procedures and Owner's log with operator.
   j. Check auxiliary equipment operation.

2. Four Inspections During the Cooling Season (April, June, August, October)

   a. Inspect chiller and adjust safety controls.
   b. Inspect condenser coils and clean as needed per manufacturer's instructions.
   c. Check operation of controls.
   d. Check oil and refrigerant levels.
   e. Check operation of lube system.
   f. Check the oil return system.
   g. Check operation of motor and starter.
   h. Record operating conditions.
   i. Check log and review chiller and system operation with operator.
   j. Conduct routine maintenance as recommended and required.
   k. Log and report repairs and parts that are required.

3. Annual Equipment Shutdown Inspection and Preventative Maintenance

   a. Check the compressor-motor assembly for the following items and perform tasks as indicated:

      – Record voltages.
      – Meg test and record motor winding resistance.
      – Lubricate motor.
      – Check seals.

b. Check the compressor oil system for the following items:

- Conduct analysis on oil and oil filter at an independent laboratory.
- Check oil pump, seal and motor.
- Cleaning the dirt leg.
- Check heater and thermostat.
- Check all other oil system components including cooler, strainer and solenoid valve where applicable.

c. Check variable frequency drive (if applicable) and perform the following tasks:

- Run diagnostic check.
- Clean contacts or recommend replacement.
- Check linkage.
- Meg test the motor.
- Check all terminals and tighten connections.
- Check overloads, dash pot oil and calibrate.
- Inspect and clean heat rejection device, as required.
- Dry run starter (or before start-up); check status.

d. Review the control panel for the following items:

- Run diagnostic check of micro control panel.
- Check safety shutdown operation.
- Check all terminals and tighten connections.
- Check display data accuracy and setpoints.

e. Check the condenser for the following items:

- Clean condenser coils per manufacturer's instructions. **Do not pressure wash or use chemicals unless recommended by manufacturer.**

f. Check the cooler for the following items:

- Check the water flow.
- Check flow switch operation.
- Check refrigerant level.
- Remove evaporator head and inspect end sheets.

g. Check the system for the following items:

- Conduct a leak check and identify leak sources for repairs. Verify proper operation of purge and perform periodic purge preventive maintenance (e.g., replacement of filter/drier).
- Record condition of sight glasses.
- Check the refrigerant cycle to verify the proper operating balance.
- Check chilled water heat transfer.

h. General items included:

- Repair insulation removed for inspection and maintenance procedures.

- Clean equipment and surrounding area upon completion of work.
- Consult with the operator.
- Report deficiencies and repairs required.

C. Total Service Coverage including labor and materials for repairs and/or troubleshooting, available during normal business hours (six hours or less response time).

**PART 2 - PRODUCTS**

Not Applicable

**PART 3 - EXECUTION**

**3.1 INSTALLATION**

A. Install in accordance with manufacturer's instructions.

B. Align chiller package on existing steel foundation.

C. Install units on vibration isolators provided by manufacturer.

D. Set unit dead level both directions. Check with carpenter level.

E. Connect to electrical service. Refer to Division 26.

F. Connect to chilled water piping. Refer to Division 23 Section 23 2113, "Hydronic Piping and Specialties."

G. Lubricate fans and motors as recommended by the manufacturer.

H. Inspect unit condensing coils for damage and repair as necessary.

I. Check all controls after start-up.

**3.2 MANUFACTURER'S FIELD SERVICES**

A. Provide startup services by factory trained manufacturer's representative in accordance with Conditions of Contract. Services shall include but not be limited to:

1. Inspection of chiller installation to confirm it meets manufacturer's requirements including: overall condition of the chiller, shipping brace removal, operational and maintenance clearances, piping connections, electrical connections, vibration isolator installation, controls integration, and field installed accessories.
2. Provide startup of chiller per manufacturer's operation manual.
3. Provide calculation of estimated energy efficiency ratio (EER) based on operating conditions available to verify chiller performance.

B. In conjunction with the Controls Contractor, provide a minimum of eight (8) hours of commissioning of the chiller integration to the building automation system (BAS).

1. Verify that control wiring is per manufacturer's requirements.
2. Verify that chiller is communicating with the BAS.
3. Verify that all required points have been successfully mapped to the BAS and are calibrated correctly.
4. Troubleshoot any communication issues.

C. On completion of installation of vibration isolators, the local vibration isolator manufacturer's representative shall inspect the chiller installation and indicate

installation errors or other faults in the system that affect the isolating system performance.

**3.3 DEMONSTRATION**

A. Provide a minimum of four (4) hours per chiller of systems demonstration and training by factory trained manufacturer's representative in accordance with Conditions of Contract. Coordinate with Owner so that all shifts are included in training.

**3.4 FIELD INSPECTION AND REPORT**

A. Provide report in accordance with Conditions of Contract, prepared by manufacturer's representatives for chiller and vibration isolators, stating that systems installed and services provided under this Section are in accordance with manufacturer's recommendations and are properly operating.

END OF SECTION

P:\13 PROJECTS\P13-0334-00MCHENRY\04 DESIGN\11 SPECS\CONSTRUCTION SPECS\23 6423 AIR-COOLED CHILLER.DOCX

# EXHIBIT 1

JCI Chiller Proposal

**BID DATE:** 10/22/2013 **LAST ADDENDUM:** #1
**PROJECT:** County of McHenry – REV#1 **NOTE(S):**
**Pre-Purchase of Air-Cooled Chillers**

# PROPOSAL

We are pleased to provide the following pricing for the above referenced project in accordance with the standard terms and condition of sale attached to this document.

## EQUIPMENT DESCRIPTIONS

**ITEM I**

AIR-COOLED SCROLL CHILLERS
TAG: ACC-A1, ACC-A2

Two (2) YORK air-cooled scroll liquid chillers supplied for 460V/3Φ/60Hz operation, complete with:

- High efficiency scroll compressors
- R-410A refrigerant
- Single point power supply with factory mounted circuit breaker
- Service isolation valves
- Control transformer
- 1 – 1/2" evaporator insulation
- **Ultra quite fans**
- **Compressor sound blankets**
- **Full unit louver enclosure**
- Compressor crankcase heater
- Suction/discharge pressure readout kit
- BACNet / Modbus communication
- 1st year parts & labor warranty (from date of shipment) on entire unit including refrigerant
- Factory start-up by York technicians
- 1st year preventative maintenance
- Submittal, Engineering and IOM Package

ITEMS SUPPLIED BY YORK AND INSTALLED BY OTHERS

- Differential pressure switch
- Neoprene Isolators

CLARIFICATIONS

- Flow switch shall be field installed

ITEMS NOT INCLUDED

- Hauling or rigging of equipment

Thank you for the opportunity to be of service.
Respectfully,

Kurt M Weiss

Kurt Weiss
847.344.7290
Account Executive
Johnson Controls, Inc.

NOTES:

1. PLACEMENT ON A LEVEL SURFACE FREE OF OBSTRUCTIONS (INCLUDING SNOW, FOR WINTER OPERATION) OR AIR RECIRCULATION ENSURES RATED PERFORMANCE, RELIABLE OPERATION AND EASE OF MAINTENANCE. SITE RESTRICTIONS MAY COMPROMISE MINIMUM CLEARANCES INDICATED BELOW, RESULTING IN UNPREDICTABLE AIR FLOW PATTERNS AND POSSIBLE DIMINISHED PERFORMANCE. YORK'S UNIT CONTROLS WILL OPTIMIZE OPERATION WITHOUT NUISANCE HIGH PRESSURE SAFETY CUTOUT. HOWEVER, THE SYSTEM DESIGNER MUST CONSIDER POTENTIAL PERFORMANCE DEGRADATION.

   RECOMMENDED MINUMUM CLEARANCES:
   - SIDE TO WALL - 6'
   - REAR TO WALL - 6'
   - CONTROL PANEL TO WALL - 4'
   - TOP - NO OBSTRUCTIONS ALLOWED
   - DISTANCE BETWEEN ADJACENT UNITS - 10'.
   - NO MORE THAN ONE ADJACENT WALL MAY BE HIGHER THAN THE UNIT.

2. WEIGHTS (LB): SHIPPING - 7,771; OPERATING - 7,890.

3. CENTER OF GRAVITY FROM ORIGIN: X= 97.4"; Y= 52" .

4. INSTALLING CONTRACTOR MUST INCLUDE VENT AND DRAIN ACCOMODATIONS IN CHILLED WATER PIPING NEAR THE EVAPORATOR.

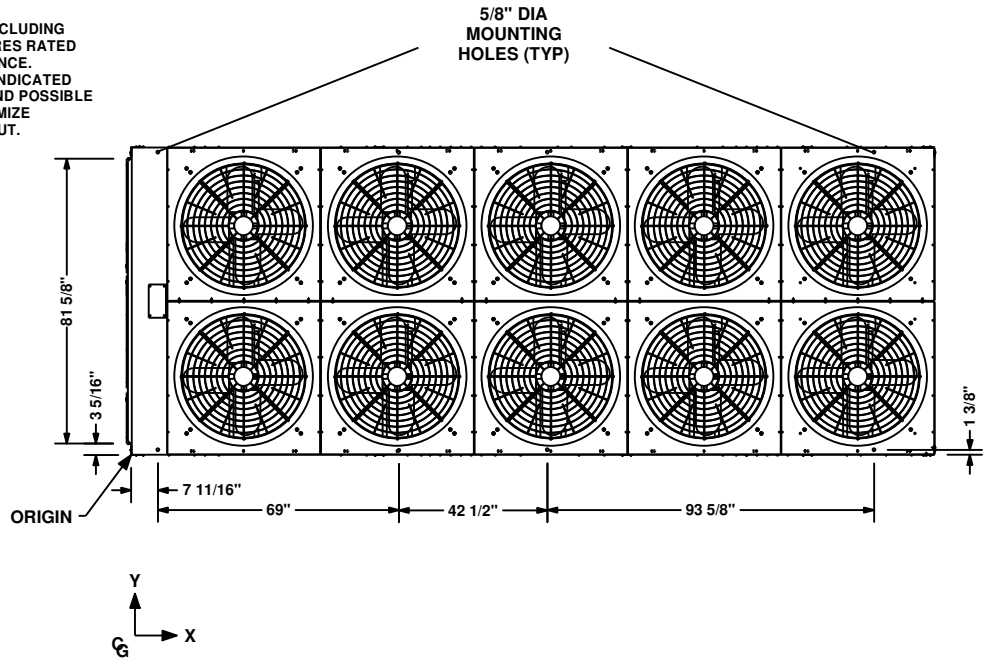


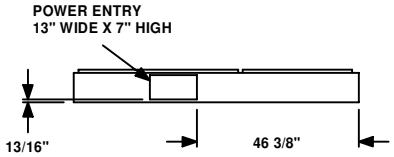


CONTROL PANEL
BOTTOM DETAIL

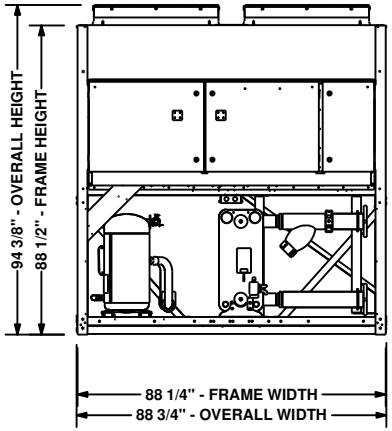


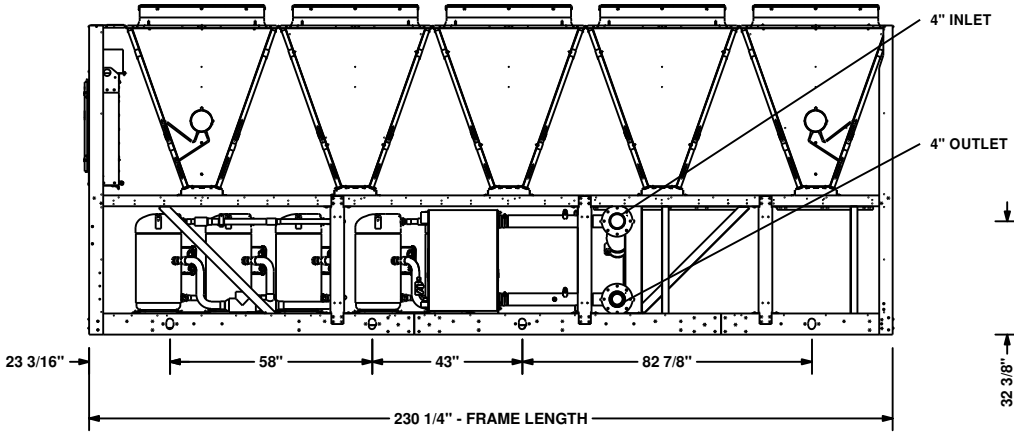


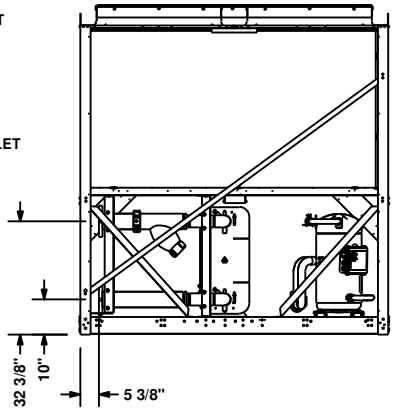


# PRODUCT DRAWING

MODEL: YLAA0175HE46
NOT FOR CONSTRUCTION

Project Name : KMW: McHenry County
Location :
Engineer :
Contractor :
For :

Sold To :
Cust Purch Order# :
York Contract# :

UNIT TAG: ACC-A1

Date : 08/20/2013 10:19:38
Rev. Date :
Form :
Dwg. Lev. :
Dwg. Scale : NTS

YORK®
A JOHNSON CONTROLS COMPANY

# Design Conditions Datasheet

| Unit Tag | Qty | Model No | Net Cooling Capacity (TR) | Nominal Voltage | Refrigerant Type |
|---|---|---|---|---|---|
| ACC-A1 | 1 | YLAA0175HE46XCBBXTX | 159.3 | 460-3-60 | R410A |

| PIN: | | | | | | | | |
|---|---|---|---|---|---|---|---|---|
| YLAA0175HE | 46XCBBXTXA | XXBLXCXX44 | SXXXXXHXDX | YAXXXXX7BX | XLXSB1XXXX | | | |
| ....5...10 | ....5...20 | ....5...30 | ....5...40 | ....5...50 | ....5...60 | ....5...70 | ....5...80 | ....5...90 |

| Evaporator Data | | Evaporator Data (Cont.) | | Performance Data | |
|---|---|---|---|---|---|
| EWT (°F) | 54 | Min. Flow Rate (USGPM) | 180 | EER (EER) | 8.2 |
| LWT (°F) | 44 | Max. Flow Rate (USGPM) | 650 | IPLV (EER) | 15.6 |
| Design Flow Rate (USGPM) | 374.4 | | | NPLV (EER) | 15.9 |
| Pressure Drop (ft H2O) | 13 | **Condenser Data** | | **Physical Data** | |
| Fluid | Water | Ambient Temp. Design (°F) | 105 | Rigging Wt. (lb) | 8720 |
| Fouling Factor (h.ft².F/Btu) | 0.0001 | Altitude (ft) | 0 | Operating Wt. (lb) | 8840 |
| Water Volume (USGAL) | 14.3 | User Min. Operating Air Temp. (°F) | 0 | | |
| | | User Max. Operating Air Temp. (°F) | 105 | | |

| Electrical Data | | | | |
|---|---|---|---|---|
| Circuit | 1 | 2 | 3 | 4 |
| Compressor RLA | 53 / 53 / 53 | 53 / 53 / 53 | | |
| Fan QTY/FLA (each) | 5 / 20 | 5 / 20 | | |
| High LRA Current | 290 / 290 / 290 | 290 / 290 / 290 | | |

| Single Point | | | | |
|---|---|---|---|---|
| Min. Circuit Ampacity | 376 | | | |
| Recommended Fuse/CB Rating | 400 | | | |
| Max. Inverse Time CB Rating | 400 | | | |
| Max. Dual Element Fuse Size (A) | 400 | | | |
| Unit Short Circuit Withstand (STD) | 5 [kA] | | | |
| Wire Lugs Per Phase | 1 + 2 | | **Operating Condition Electrical Data** | |
| Wire Range (Lug Size) | 250 - 500 kcmil + #3/0 AWG - 250 kcmil | | Compressor kW | 217.2 |
| Starter Type | Across The Line | | Total Fan kW | 16.8 |
| | | | Total kW | 234 |

Notes:

Certified in accordance with the AHRI Air-Cooled Water Chilling Packages Using Vapor Compression Cycle Certification Program, which is based on AHRI Standard 550/590 (I-P). Certified units may be found in the AHRI Directory at www.ahridirectory.org Auxiliary components included in total KW - Oil heaters, Chiller controls. Auxiliary power is already included in the compressor and fan power

AHRI CERTIFIED®
www.ahridirectory.org
Air-Cooled Chillers
AHRI Standard 550/590

| Part Load Rating Data | | | | |
|---|---|---|---|---|
| **Stage** | **Ambient (°F)** | **Capacity (TR)** | **Compressor kW** | **Unit Efficiency** |
| 1 | 105 | 159.3 | 234 | 8.2 |
| 2 | 95 | 146.1 | 172.1 | 10.2 |
| 3 | 95 | 120.4 | 134.3 | 10.8 |

| | | | | |
|---|---|---|---|---|
| 4 | 95 | 90 | 101.8 | 10.6 |
| 5 | 95 | 57.3 | 64.9 | 10.6 |
| 6 | 95 | 27.8 | 32.3 | 10.3 |

| Sound Power Levels (In Accordance with AHRI 370) | | | | | | | | | | |
|---|---|---|---|---|---|---|---|---|---|---|
| **Stage** | **Ambient (°F)** | **63** | **125** | **250** | **500** | **1K** | **2K** | **4K** | **8K** | **LWA** |
| 1 | 105 | 96 | 95 | 91 | 91 | 87 | 84 | 80 | 77 | 93 |
| 2 | 95 | 96 | 95 | 91 | 91 | 87 | 83 | 80 | 77 | 93 |
| 3 | 95 | 96 | 95 | 91 | 91 | 87 | 83 | 80 | 77 | 93 |
| 4 | 95 | 96 | 95 | 91 | 91 | 87 | 83 | 80 | 77 | 93 |
| 5 | 95 | 92 | 91 | 87 | 87 | 83 | 79 | 76 | 73 | 89 |
| 6 | 95 | 89 | 88 | 84 | 84 | 80 | 76 | 73 | 70 | 86 |

# EXHIBIT 2

JCI Chiller Installation

| YORK BY JOHNSON CONTROLS | AIR-COOLED SCROLL CHILLER | |
|---|---|---|
| INSTALLATION, OPERATION, MAINTENANCE | Supersedes: 150.72-ICOM6 (413) | Form 150.72-ICOM6.EN.UL (813) |

035-23572-100

# YLAA0070 - YLAA0175
# AIR-COOLED SCROLL CHILLERS
# WITH BRAZED PLATE HEAT EXCHANGER
# STYLE B (60 HZ) 4-10 FAN
# 70 - 175 TON
# 246-615 KW

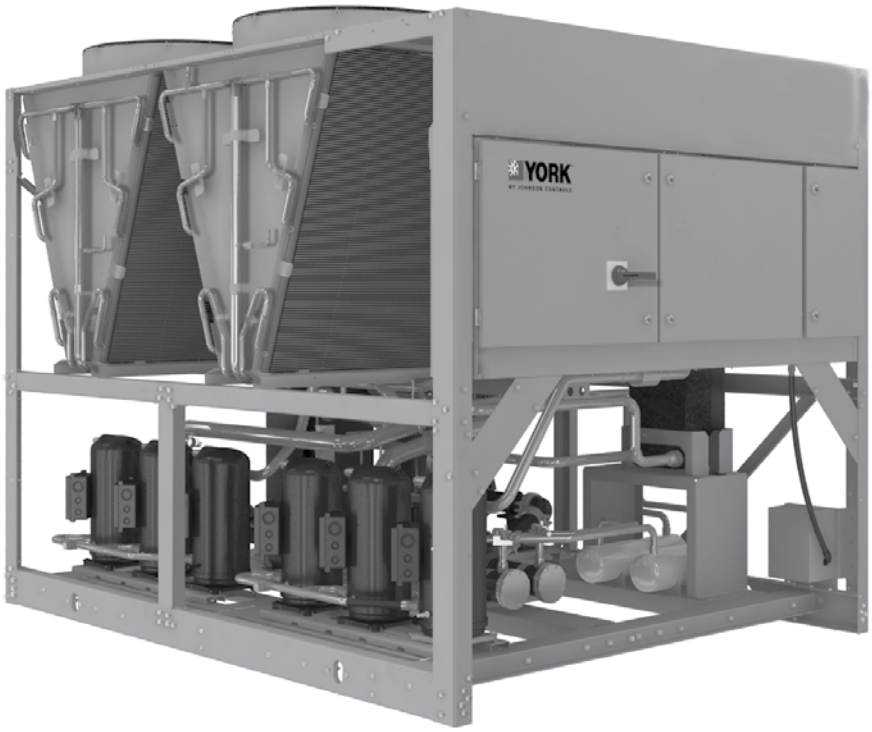


## R-410A

AHRI CERTIFIED™ www.ahridirectory.org Air-Cooled Chillers AHRI Standard 550/590

ETL LISTED

ISO 9001 Registered — Products are produced at a facility whose quality-management systems are ISO9001 certified.

Issue Date:
August 30, 2013

# IMPORTANT!

## READ BEFORE PROCEEDING!

### GENERAL SAFETY GUIDELINES

This equipment is a relatively complicated apparatus. During installation, operation maintenance or service, individuals may be exposed to certain components or conditions including, but not limited to: refrigerants, materials under pressure, rotating components, and both high and low voltage. Each of these items has the potential, if misused or handled improperly, to cause bodily injury or death. It is the obligation and responsibility of operating/service personnel to identify and recognize these inherent hazards, protect themselves, and proceed safely in completing their tasks. Failure to comply with any of these requirements could result in serious damage to the equipment and the property in which it is situated, as well as severe personal injury or death to themselves and people at the site.

This document is intended for use by owner-authorized operating/service personnel. It is expected that these individuals possess independent training that will enable them to perform their assigned tasks properly and safely. It is essential that, prior to performing any task on this equipment, this individual shall have read and understood this document and any referenced materials. This individual shall also be familiar with and comply with all applicable governmental standards and regulations pertaining to the task in question.

### SAFETY SYMBOLS

The following symbols are used in this document to alert the reader to specific situations:

DANGER

***Indicates a possible hazardous situation which will result in death or serious injury if proper care is not taken.***

CAUTION

***Identifies a hazard which could lead to damage to the machine, damage to other equipment and/or environmental pollution if proper care is not taken or instructions and are not followed.***

WARNING

***Indicates a potentially hazardous situation which will result in possible injuries or damage to equipment if proper care is not taken.***

NOTE

***Highlights additional information useful to the technician in completing the work being performed properly.***

WARNING

***External wiring, unless specified as an optional connection in the manufacturer's product line, is not to be connected inside the control cabinet. Devices such as relays, switches, transducers and controls and any external wiring must not be installed inside the micro panel. All wiring must be in accordance with Johnson Controls' published specifications and must be performed only by a qualified electrician. Johnson Controls will NOT be responsible for damage/problems resulting from improper connections to the controls or application of improper control signals. Failure to follow this warning will void the manufacturer's warranty and cause serious damage to property or personal injury.***

# CHANGEABILITY OF THIS DOCUMENT

In complying with Johnson Controls' policy for continuous product improvement, the information contained in this document is subject to change without notice. Johnson Controls makes no commitment to update or provide current information automatically to the manual owner. Updated manuals, if applicable, can be obtained by contacting the nearest Johnson Controls Service office or accessing the Johnson Controls QuickLIT website at http://cgproducts.johnsoncontrols.com.

Operating/service personnel maintain responsibility for the applicability of these documents to the equipment. If there is any question regarding the applicability of these documents, the technician should verify whether the equipment has been modified and if current literature is available from the owner of the equipment prior to performing any work on the chiller.

## CHANGE BARS

Revisions made to this document are indicated with a line along the left or right hand column in the area the revision was made. These revisions are to technical information and any other changes in spelling, grammar or formatting are not included.

# ASSOCIATED LITERATURE

| Manual Description | Form Number |
|---|---|
| Start-Up Checklist - Style A and B, 60 Hz | 150.72-CL1 |
| Renewal Parts - YLAA0070-YLAA120 Style B 60 Hz | 150.72-RP3 |
| Limited Warranty Engineered Systems Equipment | 50.05-NM2 |

# NOMENCLATURE

**YLAA0120SE 46XCB**

**1 2 3 4** BASE PRODUCT TYPE

- Y
- L
- A
- A
  - : YORK
  - : Scroll
  - : Air-Cooled
  - : Americas
  - Europe

**5 6 7 8** NOMINAL CAPACITY

- 0 # # #
- 1 # # #
- 60 HZ Nominal Tons
- 50 HZ Nominal kW

**9** UNIT DESIGNATOR

- S : Standard Efficiency
- H : High Efficiency

**10** REFRIGERANT

- E : R-410A

**11 12 13** VOLTAGE/STARTER

- 1 7 : 200 / 3/ 60
- 2 8 : 230 / 3 / 60
- 4 0 : 380 / 3 / 60
- 4 6 : 460 / 3 / 60
- 5 8 : 575 / 3 / 60
- 5 0 : 380-415 / 3 / 50
- X : Across the Line

**14 15** DESIGN/DEVELOPMENT LEVEL

- C
- A : Design Series A, B, C
  - : Development Level A (Shell & Tube Evap)
- B : Dev. Level B (Braze Plate Evap)

# TABLE OF CONTENTS

**SECTION 1 – GENERAL CHILLER INFORMATION AND SAFETY ..... 11**
Introduction ..... 11
Warranty ..... 11
Handling ..... 11
Safety And Quality ..... 11
About This Manual ..... 12
Misuse Of Equipment ..... 12

**SECTION 2 – PRODUCT DESCRIPTION ..... 15**
Introduction ..... 15
General System Description ..... 15
Communications ..... 17
Building Automation System Interface ..... 17
Power Panel ..... 17
Accessories And Options ..... 18

**SECTION 3 – HANDLING AND STORAGE ..... 31**
Delivery And Storage ..... 31
Inspection ..... 31
Moving The Chiller ..... 31
Lifting Using Lugs ..... 33
Lifting Using Shackles ..... 33

**SECTION 4 – INSTALLATION ..... 35**
Installation Checklist ..... 35
Startup/Commissioning ..... 35
Location And Clearances ..... 35
Spring Isolators (Optional) ..... 36
Compressor Mounting ..... 36
Remote Cooler Option ..... 36
Chilled Liquid Piping ..... 36
Pipework Arrangement ..... 37
Wiring ..... 37
Relief Valves ..... 38
High Pressure Cutout ..... 38
Single-Point Supply Connection – Terminal Block, Non-Fused Disconnect Switch Or Circuit Breaker ..... 39

**SECTION 5 – TECHNICAL DATA ..... 43**
Operational Limitations (English) ..... 43
Physical Data YLAA0070 – YLAA0175 60Hz ..... 46
Electrical Data ..... 48
Compressor Heaters ..... 48
Electrical Notes ..... 55
Dimensions ..... 78
Weight Distribution And Isolator Mounting Positions ..... 83
Clearances ..... 84

# TABLE OF CONTENTS (CONT'D)

Four Fan Isolator Locations ..... 85
Five And Six Fan Isolator Locations ..... 85
Eight Fan Isolator Locations ..... 86
Ten Fan Isolator Locations ..... 86
Isolator Information ..... 87

**SECTION 6 – COMMISSIONING ..... 93**
Preparation – Power Off ..... 93
Preparation – Power On ..... 94

**SECTION 7 – UNIT CONTROLS ..... 99**
Introduction ..... 99
IPU II And I/O Boards ..... 99
Transformer ..... 100
Display ..... 100
Keypad ..... 100
Unit Switch ..... 100
Battery Back-Up ..... 100
Programming # Of Compressors ..... 100
Status Key ..... 101
Display/Print Keys ..... 107
Entry Keys ..... 115
Setpoints Keys ..... 116
Schedule/Advance Day Key ..... 117
Program Key ..... 119
Unit Keys ..... 123
Bacnet, Modbus, N2 And Yorktalk 2 Communications ..... 129

**SECTION 8 – UNIT OPERATION ..... 141**
Capacity Control ..... 141
Suction Pressure Limit Controls ..... 142
Discharge Pressure Limit Controls ..... 142
Leaving Chilled Liquid Control ..... 142
Leaving Chilled Liquid Control Override To Reduce Cycling ..... 143
Leaving Chilled Liquid System Lead/Lag And Compressor Sequencing ..... 144
Return Chilled Liquid Control ..... 144
Return Chilled Liquid System Lead/Lag And Compressor Sequencing ..... 145
Anti-Recycle Timer ..... 145
Anti-Coincidence Timer ..... 145
Evaporator Pump Control And York Hydro Kit Pump Control ..... 145
Evaporator Heater Control ..... 146
Pumpdown Control ..... 146
Standard Condenser Fan Control ..... 146
Load Limiting ..... 149
Compressor Run Status ..... 149
Alarm Status ..... 149
Remote BAS/EMS Temperature Reset Using A Voltage Or Current Signal ..... 150

# TABLE OF CONTENTS (CONT'D)

**SECTION 9 – SERVICE AND TROUBLESHOOTING ..... 151**
Clearing History Buffers ..... 151
Service Mode ..... 151
Service Mode – Outputs ..... 151
Service Mode – Chiller Configuration ..... 152
Service Mode – Analog And Digital Inputs ..... 152
Control Inputs/Outputs ..... 153
Checking Inputs And Outputs ..... 155
Optional Printer Installation ..... 158
Troubleshooting ..... 160

**SECTION 10 – MAINTENANCE ..... 163**
Compressors ..... 163
Condenser Fan Motors ..... 163
Condenser MCHX Cleaning ..... 163
Operating Parameters ..... 164
On-Board Battery Back-Up ..... 164
Brazed Plate Heat Exchanger (Evaporator) Heater ..... 164
Overall Unit Inspection ..... 164
Temperature ..... 167

# LIST OF FIGURES

**FIGURE 1** - Unit Components (Front) ..... 20
**FIGURE 2** - Unit Components (Side) ..... 21
**FIGURE 3** - Power Panel Components ..... 22
**FIGURE 4** - Power Panel / Control Components ..... 23
**FIGURE 5** - Process And Instrumentation Diagram ..... 29
**FIGURE 6** - Unit Rigging/Lifting ..... 32
**FIGURE 7** - Chilled Liquid System ..... 37
**FIGURE 8** - Single-Point Supply Connection – Terminal Block, Non-Fused Disconnect Switch Or Circuit Breaker Or Circuit Breaker ..... 39
**FIGURE 9** - Control Wiring Inputs ..... 40
**FIGURE 10** - Control Wiring Outputs ..... 41
**FIGURE 11** - Elementary Wiring Diagram ..... 60
**FIGURE 12** - Elementary Wiring Diagram ..... 62
**FIGURE 13** - Fan Wiring, Standard Low Sound Or Ultra Quiet, YLAA0070 - YLAA0516 ..... 64
**FIGURE 14** - Fan Wiring, High Air Flow ..... 66
**FIGURE 15** - Single And Dual Point Wiring Options ..... 68
**FIGURE 16** - Pump Wiring ..... 69
**FIGURE 17** - Compressor Wiring ..... 70
**FIGURE 18** - Power Options Connection Diagram ..... 72
**FIGURE 19** - Power Panel ..... 74
**FIGURE 20** - Micro Panel Connections ..... 76
**FIGURE 21** - Sample Printout Supplied In The Isolator Package And In The Chiller Panel Literature Packet ..... 83
**FIGURE 22** - Unit Clearances – All Models ..... 84
**FIGURE 23** - Status Key Messages Quick Reference List ..... 106
**FIGURE 24** - Operation Data ..... 110
**FIGURE 25** - Setpoints Quick Reference List ..... 122
**FIGURE 26** - Unit Keys Options Programming Quick Reference List ..... 128
**FIGURE 27** - Micro Panel Connections ..... 130
**FIGURE 28** - Leaving Water Temperature Control Example ..... 142
**FIGURE 29** - Setpoint Adjust ..... 143
**FIGURE 30** - Condenser Fan Locations ..... 146
**FIGURE 31** - Microboard Layout ..... 154
**FIGURE 32** - I/O Board Relay Contact Architecture ..... 158
**FIGURE 33** - Printer To Microboard Electrical Connections ..... 159

# LIST OF TABLES

**TABLE 1** - Canadian Registration Numbers ..... 16
**TABLE 2** - Complete Pin Number Description ..... 24
**TABLE 3** - Temperatures And Flows ..... 43
**TABLE 4** - Ethylene And Propylene Glycol Correction Factors ..... 44
**TABLE 5** - Physical Data (English) 60 Hz ..... 46
**TABLE 6** - Micropanel Power Supply ..... 48
**TABLE 7** - Voltage Range ..... 48
**TABLE 8** - Pump Electrical Data (60 hz) ..... 49
**TABLE 9** - Electrical Data Without Pumps ..... 50
**TABLE 10** - Transformer Load ..... 52
**TABLE 11** - Wiring Lugs ..... 54
**TABLE 12** - Cooling Setpoint, Programmable Limits And Defaults ..... 118
**TABLE 13** - Program Key Limits And Default ..... 120
**TABLE 14** - Minimum, Maximum And Default Values ..... 130
**TABLE 15** - Values Required For Bas Communication ..... 131
**TABLE 16** - Real Time Error Numbers ..... 132
**TABLE 17** - Bacnet And Modbus Communications Data Map ..... 133
**TABLE 18** - Yorktalk 2 Communications Data Map ..... 137
**TABLE 19** - Sample Compressor Staging For Return Water Control ..... 143
**TABLE 20** - Return Chilled Liquid Control For 4 Compressors (6 Steps) ..... 143
**TABLE 21** - Lead/Lag Return Chilled Liquid Control For 4 Compressors (6 Steps) ..... 144
**TABLE 22** - YLAA Standard Condenser Fan Control Using Discharge Pressure Only (2, 3, Or 4 Fans Per System) ..... 147
**TABLE 23** - YLAA Standard Condenser Fan Control Using Discharge Pressure Only (5 Or 6 Fans Per System) ..... 148
**TABLE 24** - Compressor Operation Load Limiting ..... 149
**TABLE 25** - I/O Digital Inputs ..... 153
**TABLE 26** - I/O Digital Outputs ..... 153
**TABLE 27** - I/O Analog Inputs ..... 153
**TABLE 28** - I/O Analog Outputs ..... 153
**TABLE 29** - Outdoor Air Sensor Temperature/Voltage/Correlation ..... 155
**TABLE 30** - Entering/Leaving Chilled Liquid Temp. Sensor, Temperature/Voltage Correlation ..... 156
**TABLE 31** - Pressure Transducers ..... 157
**TABLE 32** - Troubleshooting ..... 160
**TABLE 33** - SI Metric Conversion ..... 167

THIS PAGE INTENTIONALLY LEFT BLANK

# SECTION 1 – GENERAL CHILLER INFORMATION AND SAFETY



## INTRODUCTION

YORK YLAA chillers are manufactured to the highest design and construction standards to ensure high performance, reliability and adaptability to all types of air conditioning installations.

This manual contains all the information required for correct installation and commissioning of the unit, together with operating and maintenance instructions. The manuals should be read thoroughly before attempting to operate or service the unit.

All procedures detailed in the manuals, including installation, commissioning and maintenance tasks must only be performed by suitably trained and qualified personnel.

The manufacturer will not be liable for any injury or damage caused by incorrect installation, commissioning, operation or maintenance resulting from a failure to follow the procedures and instructions detailed in the manuals.

## WARRANTY

Johnson Controls warrants all equipment and materials against defects in workmanship and materials for a period of eighteen months from date of shipment, or 12 months from date of start-up, whichever occurs first, unless labor or extended warranty has been purchased as part of the contract.

The warranty is limited to parts only replacement and shipping of any faulty part, or sub-assembly, which has failed due to poor quality or manufacturing errors. All claims must be supported by evidence that the failure has occurred within the warranty period, and that the unit has been operated within the designed parameters specified.

All warranty claims must specify the unit model, serial number, order number and run hours/starts. Model and serial number information is printed on the unit identification plate.

The unit warranty will be void if any modification to the unit is carried out without prior written approval from Johnson Controls.

For warranty purposes, the following conditions must be satisfied:

- The initial start of the unit must be carried out by trained personnel from an Authorized Johnson Controls Service Center *(see SECTION 6 – COMMISSIONING)*.
- Only genuine YORK approved spare parts, oils, coolants, and refrigerants must be used.
- All the scheduled maintenance operations detailed in this manual must be performed at the specified times by suitably trained and qualified personnel (*see SECTION 10 – MAINTENANCE)*.
- Failure to satisfy any of these conditions will automatically void the warranty (see *Warrranty* on this page).

## HANDLING

These units are shipped as completely assembled units containing full operating charge, and care should be taken to avoid damage due to rough handling.

## SAFETY AND QUALITY

### Standards for Safety and Quality

YLAA chillers are designed and built within an ISO 9002 accredited design and manufacturing organization. The chillers comply with the applicable sections of the following Standards and Codes:

- ANSI/ASHRAE Standard 15 - Safety Code for Mechanical Refrigeration.
- ANSI/NFPA Standard 70 - National Electrical Code (N.E.C.).
- ASME Boiler and Pressure Vessel Code - Section VIII Division 1.
- ARI Standard 550/590 - Positive Displacement Compressors and Air Cooled Rotary Screw Water Chilling Packages.
- ASHRAE 90.1 - Energy Efficiency compliance.
- Conform to Intertek Testing Services, formerly ETL, for construction of chillers and provide ETL/cETL listing label.
- Manufactured in facility registered to ISO 9002.
- OSHA – Occupational Safety and Health Act.

In addition, the chillers conform to Underwriters Laboratories (U.L.) for construction of chillers and provide U.L./cU.L. Listing Label.

### Responsibility for Safety

Every care has been taken in the design and manufacture of the unit to ensure compliance with the safety requirements listed above. However, the individual operating or working on any machinery is primarily responsible for:

- Personal safety, safety of other personnel, and the machinery.
- Correct utilization of the machinery in accordance with the procedures detailed in the manuals.

## ABOUT THIS MANUAL

The following terms are used in this document to alert the reader to areas of potential hazard.

WARNING

***A WARNING is given in this document to identify a hazard, which could lead to personal injury. Usually an instruction will be given, together with a brief explanation and the possible result of ignoring the instruction.***

CAUTION

***A CAUTION identifies a hazard which could lead to damage to the machine, damage to other equipment and/or environmental pollution. Usually an instruction will be given, together with a brief explanation and the possible result of ignoring the instruction.***

NOTE

***A NOTE is used to highlight additional information, which may be helpful to you but where there are no special safety implications.***

The contents of this manual include suggested best working practices and procedures. These are issued for guidance only, and they do not take precedence over the above stated individual responsibility and/or local safety regulations.

This manual and any other document supplied with the unit are the property of Johnson Controls which reserves all rights. They may not be reproduced, in whole or in part, without prior written authorization from an authorized Johnson Controls representative.

## MISUSE OF EQUIPMENT

### Suitability for Application

The unit is intended for cooling water or glycol solutions and is not suitable for purposes other than those specified in these instructions. Any use of the equipment other than its intended use, or operation of the equipment contrary to the relevant procedures may result in injury to the operator, or damage to the equipment.

The unit must not be operated outside the design parameters specified in this manual.

### Structural Support

Structural support of the unit must be provided as indicated in these instructions. Failure to provide proper support may result in injury to the operator, or damage to the equipment and/or building.

### Mechanical Strength

The unit is not designed to withstand loads or stresses from adjacent equipment, pipework or structures. Additional components must not be mounted on the unit. Any such extraneous loads may cause structural failure and may result in injury to the operator, or damage to the equipment.

### General Access

There are a number of areas and features, which may be a hazard and potentially cause injury when working on the unit unless suitable safety precautions are taken. It is important to ensure access to the unit is restricted to suitably qualified persons who are familiar with the potential hazards and precautions necessary for safe operation and maintenance of equipment containing high temperatures, pressures and voltages.

### Pressure Systems

The unit contains refrigerant vapor and liquid under pressure, release of which can be a danger and cause injury. The user should ensure that care is taken during installation, operation and maintenance to avoid damage to the pressure system. No attempt should be made to gain access to the component parts of the pressure system other than by suitably trained and qualified personnel.

### Electrical

The unit must be grounded. No installation or maintenance work should be attempted on the electrical equipment without first switching power OFF, isolating and locking-off the power supply. Servicing and maintenance on live equipment must only be performed by suitably trained and qualified personnel. No attempt should be made to gain access to the control panel or electrical enclosures during normal operation of the unit.

### Rotating Parts

Fan guards must be fitted at all times and not removed unless the power supply has been isolated. If ductwork is to be fitted, requiring the wire fan guards to be removed, alternative safety measures must be taken to protect against the risk of injury from rotating fans.

### Sharp Edges

The fins on the air-cooled condenser coils have sharp metal edges. Reasonable care should be taken when working in contact with the coils to avoid the risk of minor abrasions and lacerations. The use of gloves is recommended.

Frame rails, brakes, and other components may also have sharp edges. Reasonable care should be taken when working in contact with any components to avoid risk of minor abrasions and lacerations.

### Refrigerants and Oils

Refrigerants and oils used in the unit are generally non-toxic, non-flammable and non-corrosive, and pose no special safety hazards. Use of gloves and safety glasses is, however, recommended when working on the unit. The build up of refrigerant vapor, from a leak for example, does pose a risk of asphyxiation in confined or enclosed spaces and attention should be given to good ventilation.

### High Temperature and Pressure Cleaning

High temperature and pressure cleaning methods (e.g. steam cleaning) should not be used on any part of the pressure system as this may cause operation of the pressure relief device(s). Detergents and solvents, which may cause corrosion, should also be avoided.

### Emergency Shutdown

In case of emergency, the control panel is fitted with a Unit Switch to stop the unit in an emergency. When operated, it removes the low voltage 120VAC electrical supply from the unit controller, thus shutting down the unit.

THIS PAGE INTENTIONALLY LEFT BLANK

# SECTION 2 – PRODUCT DESCRIPTION

## INTRODUCTION

YORK YLAA Air-Cooled Scroll Chillers provide chilled water for all air conditioning applications using central station air handling or terminal units. They are completely self-contained and are designed for outdoor (roof or ground level) installation. Each complete packaged unit includes hermetic scroll compressors, a liquid cooler, air cooled condenser, a charge of Zero Ozone Depletion Potential Refrigerant R-410A and a weather resistant microprocessor control center, all mounted on a rugged steel base.

The units are completely assembled with all interconnecting refrigerant piping and internal wiring, ready for field installation.

Prior to delivery, the packaged unit is pressure-tested, evacuated, and fully charged with Refrigerant R-410A and oil. After assembly, a complete operational test is performed with water flowing through the cooler to assure that the refrigeration circuit operates correctly.

The unit structure is heavy-gauge, galvanized steel. This galvanized steel is coated with baked-on powder paint, which, when subjected to ASTM B117 1000 hour, salt spray testing, yields a minimum ASTM 1654 rating of “6”. Units are designed in accordance with NFPA 70 (National Electric Code), ASHRAE/ANSI 15 Safety code for mechanical refrigeration, ASME, and rated in accordance with ARI Standard 550/590.

## GENERAL SYSTEM DESCRIPTION

### Compressors

The chiller has suction-gas cooled, hermetic, scroll compressors. The YLAA compressors incorporate a compliant scroll design in both the axial and radial direction. All rotating parts are statically and dynamically balanced. A large internal volume and oil reservoir provides greater liquid tolerance. Compressor crankcase heaters are also included for extra protection against liquid migration.

### Brazed Plate Evaporator

The compact, high efficiency Brazed Plate Heat Exchanger (BPHE) is constructed with 316L stainless steel corrugated channel plates with a filler material between each plate. It offers excellent heat transfer performance with a compact size and low weight, reducing structural steel requirements on the job site.

The heat exchanger is manufactured in a precisely controlled vacuum-brazing process that allows the filler material to form a brazed joint at every contact point between the plates, creating complex channels. The arrangement is similar to older plate and frame technology, but without gaskets and frame parts.

Water inlet and outlet connections are grooved for compatibility with field supplied ANSI/AWWA C-606 couplings.

The evaporator is equipped with a thermostat-controlled heater. The heater provides freeze protection for the evaporator down to -20°F (-29°C) ambient. The evaporator is covered with 3/4" flexible, closed-cell, foam insulation (K=0.25).

A 1/16" (1.6mm) mesh wye-strainer is provided as standard for installation upstream of the heat exchanger to prevent clogging from water system debris.

### Canadian Registration Number (CRN) Application & Proof of Conformance

Since all YLAA brazed plate evaporators are categorized as pressure "H" fittings per CSA-B51, a CRN label or marking is not provided on the evaporator. According to the Canadian Standards Association's Boiler, Pressure Vessel, and Pressure Piping Code B-51 (2009 version), a product registered as a category "H" fitting does not require a label or marking displaying the CRN.

**TABLE 1 -** CANADIAN REGISTRATION NUMBERS

| CANADIAN PROVINCE | CRN # |
|---|---|
| BC | OH13953.51 |
| AB | OH13953.52 |
| ON | OH13953.5 |
| PQ/MB/SK | OH13953.56 |
| NB | OH13953.57 |
| NS | OH13953.58 |
| PEI | OH13953.59 |
| NF | OH13953.50 |
| NU | OH13953.5N |
| NWT | OH13953.5T |
| YU | OH13953.5Y |

### Condenser

#### *Microchannel Condenser (MCHX)*

MCHX Condensers are made of a single material to avoid galvanic corrosion due to dissimilar metals. MCHX and headers are brazed as one piece. Integral sub cooling is included. The design working pressure of the MCHX is 650 PSIG (45 bar). MCHX Condenser is easily washable with clear water.

#### *Fans*

The condenser fans are composed of corrosion resistant aluminum hub and glass-fiber reinforced polypropylene composite blades molded into a low noise airfoil section. They are designed for maximum efficiency and are statically and dynamically balanced for vibration free operation. They are directly driven by independent motors, and positioned for vertical air discharge. The fan guards are constructed of heavy gauge, rust resistant, coated steel. All blades are statically and dynamically balanced for vibration free operation.

#### *Motors*

The fan motors are Totally Enclosed Air-Over, and are current protected. They feature ball bearings that are double sealed and permanently lubricated.

### Control Center

All controls are contained in a NEMA 3R/12 cabinet with hinged outer door and includes a Liquid Crystal Display with Light Emitting Diode backlighting for outdoor viewing:

- Two display lines
- Twenty characters per line

#### *Display/Print Keys*

- Color coded 12-button non-tactile keypad with sections for display and print of typical information:
- Chilled liquid temperatures
- Ambient temperature
- System pressures (each circuit)
- Operating hours and starts (each compressor)
- Print calls up to the liquid crystal display
- Operating data for the systems
- History of fault shutdown data for up to the last six fault shutdown conditions.
- An RS-232 port, in conjunction with this press-to-print button, is provided to permit the capability of hard copy print-outs via a separate printer (by others).

#### *Entry Keys*

This section is used to enter setpoints or modify system values.

#### *Setpoints Keys*

Updating can be performed to:

- Chilled liquid temperature setpoint and range
- Remote reset temperature range
- Set daily schedule/holiday for start/stop
- Manual override for servicing
- Low and high ambient cutouts

- Number of compressors
- Low liquid temperature cutout
- Low suction pressure cutout
- High discharge pressure cutout
- Anti-recycle timer (compressor start cycle time)
- Anti-coincident timer (delay compressor starts)

### Unit Keys

This section is used to:

- Set time
- Set unit options

### *Oper Data Key*

The microprocessor control center is capable of displaying the following:

- Return and leaving liquid temperature
- Low leaving liquid temperature cutout setting
- Low ambient temperature cutout setting
- Outdoor air temperature
- English or Metric data
- Suction pressure cutout setting
- Each system suction pressure
- Discharge pressure (optional)
- Liquid Temperature Reset via a Johnson Controls ISN DDC or Building Automation System (by others) via a 4 to 20 milliamp or 0 to10VDC input
- Anti-recycle timer status for each system
- Anti-coincident system start timer condition
- Compressor run status
- No cooling load condition
- Day, date and time
- Daily start/stop times
- Holiday status
- Automatic or manual system lead/lag control
- Lead system definition
- Compressor starts and operating hours
- (each compressor)
- Status of hot gas valves, evaporator heater
- and fan operation
- Run permissive status
- Number of compressors running
- Liquid solenoid valve status
- Load and unload timer status
- Water pump status

Provisions are included for: pumpdown at shutdown; optional remote chilled water temperature reset and two steps of demand load limiting from an external building automation system. Unit alarm contacts are standard.

The operating program is stored in non-volatile memory battery backed RAM to eliminate chiller failure due to AC powered failure/battery discharge. Programmed setpoints are retained in lithium battery-backed RTC memory for 5 years minimum.

## COMMUNICATIONS

- Native communication capability for BACnet (MS/TP) and Modbus.
- Optional communication available for N2 and LON via eLink Gateway option.

## BUILDING AUTOMATION SYSTEM INTERFACE

The Microprocessor Board can accept a 4 to 20 milliamp, or 0 to10VDC input to reset the leaving chiller liquid temperature from a Building Automation System.

- The standard unit capabilities include remote start-stop, remote water temperature reset via a PWM 4 to 20 milliamp or 0 to 10VDC input signal or up to two stages of demand (load) limiting depending on model.
- The standard control panel can be directly connected to a Johnson Controls Building Automated System.

## POWER PANEL

Each panel contains:

- Compressor power terminals
- Compressor motor starting contactors per I.E.C.**
- Control power terminals to accept incoming for 115-1-60 control power
- Fan contactors and overload current protection

The power wiring is routed through liquid-tight conduit to the compressors and fans.

## ACCESSORIES AND OPTIONS

### Power Options

#### *Compressor Power Connections*

Single-point terminal block connection(s) are provided as standard. The following power connections are available as options. (See electrical data for specific voltage and options availability.) **(Factory-mounted)**

#### *Single-Point Supply Terminal Block*

Includes enclosure, terminal-block and interconnecting wiring to the compressors. Separate external protection must be supplied, by others, in the incoming compressor-power wiring. (Do not include this option if either the Single-Point Non-Fused Disconnect Switch or Single-Point Circuit Breaker options have been included.)

#### *Single-Point Non-Fused Disconnect Switch*

Unit-mounted disconnect switch with external, lockable handle (in compliance with Article 440-14 of N.E.C.), can be supplied to isolate the unit power voltage for servicing. Separate external fusing must be supplied, by others in the power wiring, which must comply with the National Electrical Code and/or local codes.

#### *Single-Point Circuit Breaker*

A unit mounted circuit breaker with external, lockable handle (in compliance with N.E.C. Article 440-14), can be supplied to isolate the power voltage for servicing. (This option includes the Single-Point Power connection.)

#### *Control Transformer*

Converts unit power voltage to 115-1-60 (2.0 or 3.0 KVA capacity). Factory mounting includes primary and secondary wiring between the transformer and the control panel. (**Factory-mounted**)

### Control Options

#### *Ambient Kit (Low)*

Units will operate to 25°F (-3.9°C). This accessory includes all necessary components to permit chiller operation to 0°F (-18°C). (This option includes the Discharge Pressure Transducer / Readout Capability option.) For proper head pressure control in applications below 30°F (-1°C) where wind gusts may exceed 5 mph, it is recommended that Optional Condenser Louvered Enclosure Panels also be included. (**Factory-mounted**)

### High Ambient Kit With Sunshield

Allows units to operate when the ambient temperature is above 115°F (46°C). Includes sun shield panels and discharge pressure transducers.

#### *Language LCD and Keypad Display*

Spanish, French, German, and Italian unit LCD controls and keypad display available. Standard language is English.

### Compressor, Piping, Evaporator Options

#### *Low Temperature Glycol*

Replaces standard Thermostatic Expansion Valves with Electronic Expansion Valves to achieve leaving glycol temperatures as low as 10°F (-12°C). Required for any leaving liquid temperature below 30°F (-1°C). Electronic Expansion Valves permit operation at both low temperatures and comfort cooling applications without a capacity loss or derate at either condition. **(Factory installed)**

#### *Chicago Code Relief Valves*

Unit will be provided with relief valves to meet Chicago code requirements. (**Factory-Mounted**)

#### *Service Suction Isolation Valve*

Service suction (ball-type) isolation valves are added to unit per system (discharge service ball-type isolation valve is standard on each circuit). **(Factory-Mounted)**

#### *Hot Gas By-Pass*

Permits continuous, stable operation at capacities below the minimum step of compressor unloading to as low as 5% capacity (depending on both the unit and operating conditions) by introducing an artificial load on the cooler. Hot gas by-pass is installed on only refrigerant system #1 on two-circuited units. (**Factory-Mounted**)

#### *Flanges (ANSI/AWWA C-606 couplings Type)*

Consists of (2) Flange adapter for grooved end pipe (standard 150 psi [10.5 bar] cooler). (Not available on optional DX cooler 300 PSIG DWP waterside.) (**Field-mounted**)

#### *Flow Switch*

A thermal dispersion type flow switch provides accurate, low maintenance flow proving and is included standard. It is factory wired and installed in the extension pipe between evaporator outlet and edge of chiller. The extension pipe is secured to the chiller frame for shipping to avoid risk of damage to evaporator

and is easily attached to the evaporator at startup using the supplied ANSI/AWWA C-606 connector. The flow switch can be deleted if alternate or existing flow switch is field supplied.

### *Heat Recovery Condenser*

A partially condensing refrigerant to liquid condenser recovers heat off both refrigerant circuits and rejects into a single liquid circuit. Factory installed between the compressor discharge and the condenser (air) coils to capture the maximum amount of heat. Capable of recovering up to 85% total heat of rejection (cooling load plus work input); temperatures as high as 140°F (60°C) are possible.

### *Hydro-Kit*

Factory installed Hydro-Kit suitable for water and glycol systems with up to 35% glycol at leaving temperatures down to 20°F. The hydro-kit option is available in a single or dual configuration (dual as standby duty only), with totally enclosed permanently lubricated pump motors.

The hydro-kit option comes standard with a balancing valve, discharge check valve, discharge shutoff valve, thermal dispersion flow switch, pressure ports, inlet wye-strainer, bleed and drain valves and frost protection.

Service shut off valves, additional pressure ports and expansion tanks are optional within the hydro-kit option.

## Condenser and Cabinet Options

MCHX Condenser protection against corrosive environments is available by choosing any of the following options. For additional application recommendations, refer to FORM 150.12-ES1. **(Factory-Mounted)**

### *Post-Coated Dipped MCHX Condenser*

The unit MCHX is constructed with post dipped-epoxy MCHX condenser. This is recommended for seashore and other corrosive applications (with the exception of strong alkalies, oxidizers and wet bromine, chlorine and fluorine in concentrations greater than 100 ppm).

### *Enclosure Panels (Unit)*

Tamperproof Enclosure Panels prevent unauthorized access to units. Enclosure Panels can provide an aesthetically pleasing alternative to expensive fencing. Additionally, for proper head pressure control, Johnson Controls recommends the use of Condenser Louvered Panels for winter applications where wind gusts may exceed five miles per hour. The following types of enclosure panels are available:

- **Wire Panels (Full Unit)** - Consists of welded wire-mesh guards mounted on the exterior of the unit. Prevents unauthorized access, yet provides free air flow. (**Factory-Mounted**)
- **Wire/Louvered Panels** - Consists of welded wire-mesh panels on the bottom part of unit and louvered panels on the condenser section of the unit. (**Factory-Mounted**)
- **Louvered Panels (MCHX Condenser Only)** - Louvered Panels are mounted on the sides and ends of the MCHX condenser for protection. (**Factory-Mounted**)
- **Louvered Panels (Full Unit)** - Louvered panels surround the front, back, and sides of the unit. They prevent unauthorized access and visually screen unit components. Unrestricted air flow is permitted through generously sized louvered openings. This option is applicable for any outdoor design ambient temperature up to 115°F (46°). (**Factory-Mounted**)

### *MCHX End Hail Guard*

Louvered panel attached to exposed MCHX end. (**Factory-Mounted**)

## Sound Attenuation

One or both of the following sound attenuation options are recommended for residential or other similar sound sensitive locations:

- **Compressor Acoustic Sound Blanket** - Each compressor is individually enclosed by an acoustic sound blanket. The sound blankets are made with one layer of acoustical absorbent textile fiber of 5/8” (15mm) thickness; one layer of anti-vibrating heavy material thickness of 1/8” (3mm). Both are closed by two sheets of welded PVC, reinforced for temperature and UV resistance. (**Factory-Mounted**)
- **Ultra Quiet Fans** - Lower RPM, 8-pole fan motors are used with steeper-pitch fans. (**Factory-Mounted**)

### *Vibration Isolators*

Level adjusting, spring type 1” (25.4mm) or seismic deflection or neoprene pad isolators for mounting under unit base rails. (**Field-mounted**)

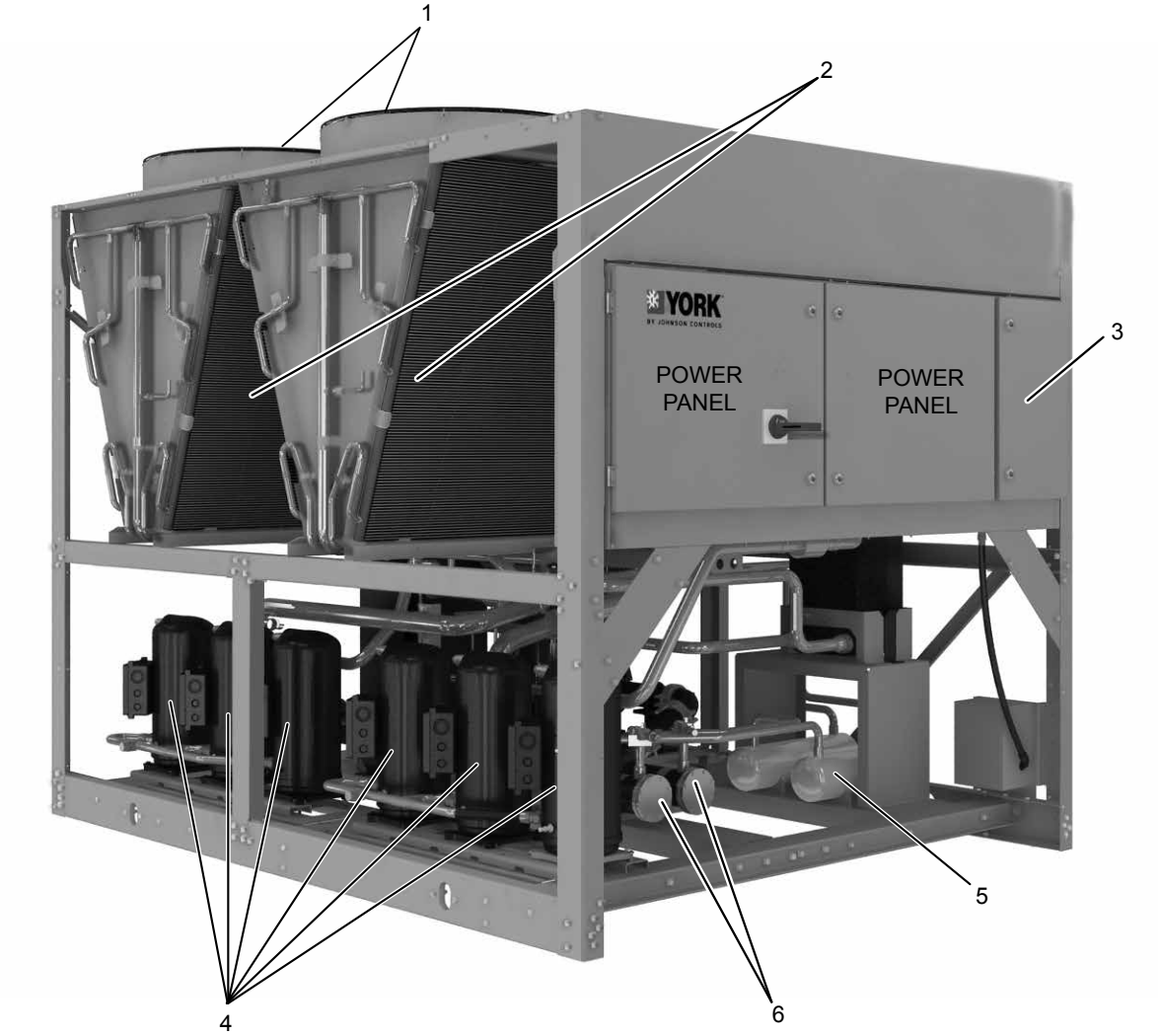


| ITEM | DESCRIPTION |
|---|---|
| 1 | Fan Assemblies |
| 2 | MCHX Condenser |
| 3 | Control Panel |
| 4 | Compressors |
| 5 | Receiver Included with Optional Heat Recovery Condenser |
| 6 | Filter Driers |

**FIGURE 1 -** UNIT COMPONENTS (FRONT)

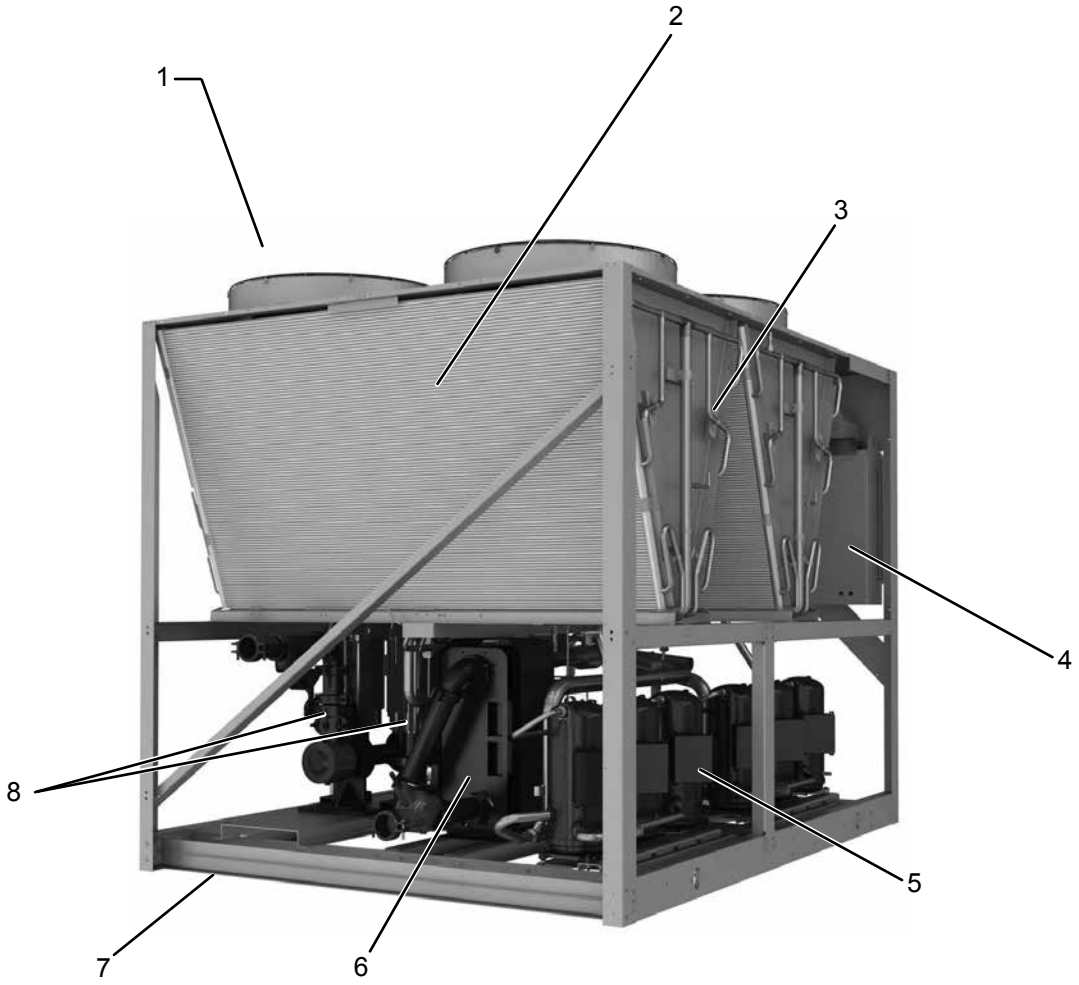


| ITEM | DESCRIPTION |
|---|---|
| 1 | Fan Deck |
| 2 | MCHX Condenser |
| 3 | Coil Headers |
| 4 | Control and Power Panels |
| 5 | Compressors |
| 6 | Brazed Plate Evaporator |
| 7 | Formed Steel Base Rails |
| 8 | Hydro-Kit Pumps And Motors (Optional) |

**FIGURE 2 -** UNIT COMPONENTS (SIDE)

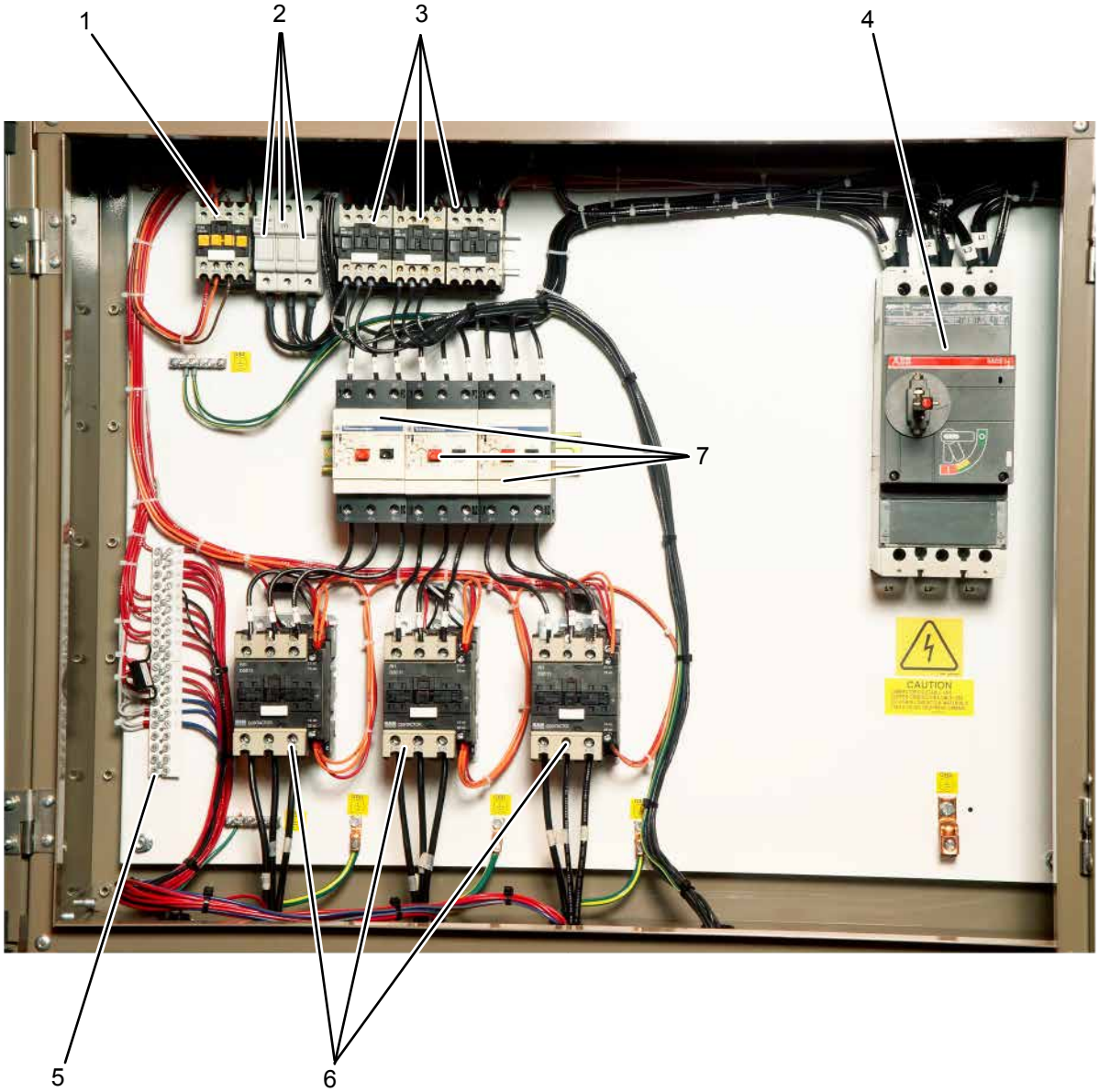


| ITEM | DESCRIPTION |
|---|---|
| 1 | Fan Contactor |
| 2 | Fan Fuses |
| 3 | Fan Contactor |
| 4 | Disconnect Switch (Optional) |
| 5 | XTBF1 |
| 6 | Compressor Contactors |
| 7 | Compressor Overloads |

**FIGURE 3 -** POWER PANEL COMPONENTS

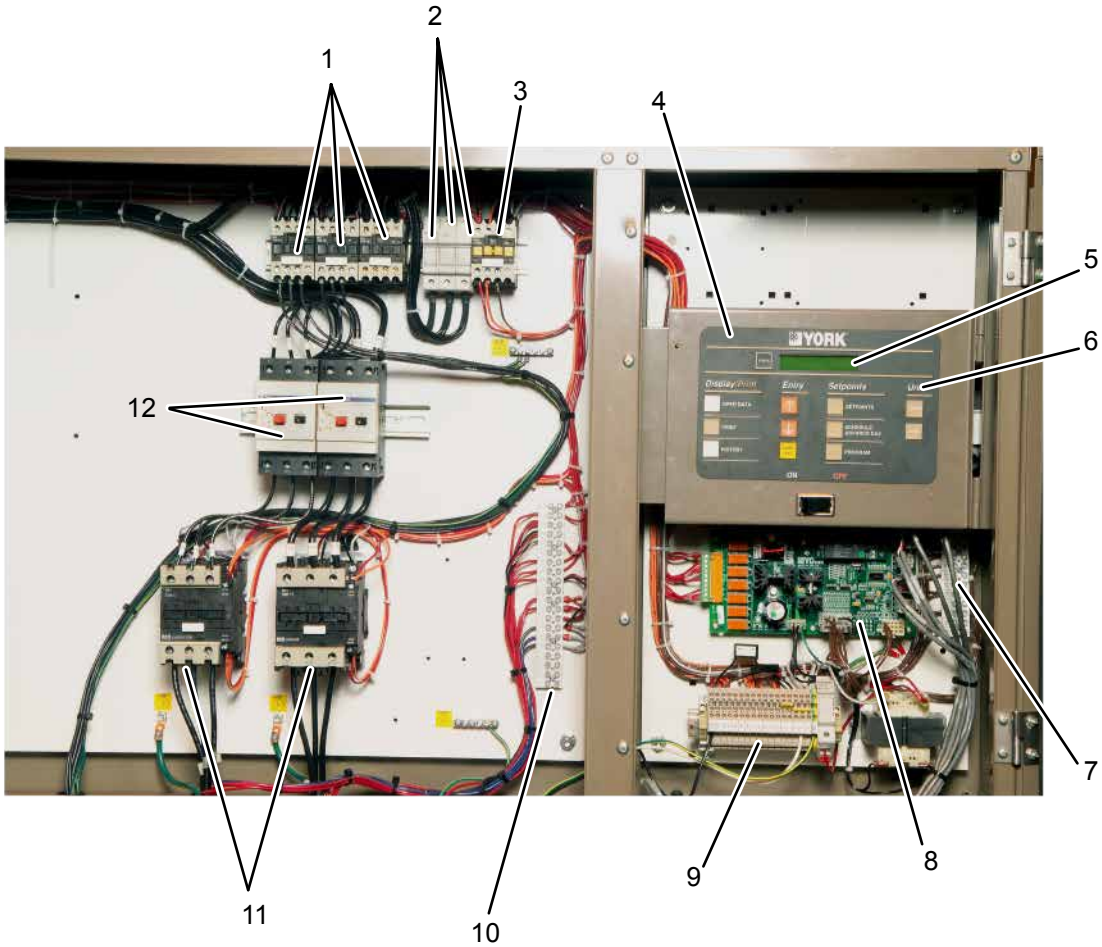


| ITEM | DESCRIPTION |
|---|---|
| 1 | Fan Contactor |
| 2 | Fan Fuses |
| 3 | Control Relay |
| 4 | Microcomputer Control Center |
| 5 | Display |
| 6 | Keypad |
| 7 | XTBC1 |
| 8 | Microboard |
| 9 | XTCB2 |
| 10 | XTBF2 |
| 11 | Compressor Contactors |
| 12 | Compressor Overloads |

**FIGURE 4 -** POWER PANEL / CONTROL COMPONENTS

# PRODUCT IDENTIFICATION NUMBER (PIN)

**TABLE 2 -** COMPLETE PIN NUMBER DESCRIPTION

| FEATURE | FEATURE DESCRIPTION | OPTION | OPTION DESCRIPTION |
|---|---|---|---|
| MODEL | Model (PIN 1-4) | | YLAA |
| CAPACITY | Capacity (PIN 5-8) | 0070 | 0070 |
| | | 0080 | 0080 |
| | | 0090 | 0090 |
| | | 0091 | 0091 |
| | | 0100 | 0100 |
| | | 0101 | 0101 |
| | | 0115 | 0115 |
| | | 0120 | 0120 |
| | | 0125 | 0125 |
| | | 0136 | 0136 |
| | | 0142 | 0142 |
| | | 0150 | 0150 |
| | | 0155 | 0155 |
| | | 0156 | 0156 |
| | | 0170 | 0170 |
| | | 0175 | 0175 |
| UNIT | Unit Designator (PIN 9) | S | Standard Efficiency |
| | | H | High Efficiency |
| REF. | Refrigerant (PIN 10) | E | R-410A |
| VOLTS | Voltage (PIN 11 & 12) | 17 | 200/3/60 |
| | | 28 | 230/3/60 |
| | | 40 | 380/3/60 |
| | | 46 | 460/3/60 |
| | | 50 | 380-415/3/50 |
| | | 58 | 575/3/60 |
| STARTER | Starter (PIN 13) | X | Across the Line starter |
| | | T | Soft Start |
| DESIGN | Design Series (PIN 14) | A | Design Series A (MicroChannel) |
| | | C | Design Series C (MicroChannel CE/ETL Panel) |
| DEV | Development Level (PIN 15) | B | Development Level B |
| POWER | Power Field (PIN 16 &17) | SX | SP Supply TB |
| | | SD | SP NF Disconnect Switch |
| | | BX | SP Circuit Breaker w/ Lockable Handle |
| TRANS | Cntrl Transformer (PIN 18) | X | No Control Transformer Required |
| | | T | Control Transformer Required |
| | | Q | Special Control Transformer Required |
| PFC | Power Factor Capacitor (PIN 19) | X | No Power Capacitor required |
| | | C | Power Capacitor required |
| | | Q | Special Power Capacitor required |
| AMB | Ambient Kits (PIN 20) | H | High Ambient Kit Standard (factory) |
| | | A | Both Low/High Ambient Kit required (factory) |
| | | B | Both Low/High Ambient Kit w/Sunshield (factory) |
| | | S | High Ambient Kit w/Sunshield (factory) |
| | | Q | Special Ambient Kit required |
| BAS | Bas Reset/Offset (PIN 21) | X | BAS Reset/Offset required (standard) |
| | | L | LON E-Link Kit (factory) |
| | | Q | Special BAS Reset/Offset required |

**TABLE 1** - COMPLETE PIN NUMBER DESCRIPTION (CONT'D)

| FEATURE | FEATURE DESCRIPTION | OPTION | OPTION DESCRIPTION |
|---|---|---|---|
| LCD | Language (PIN 22) | X | English |
| | | S | Spanish |
| | | C | Chinese (Simplified) (Not Applicable to eLogia) |
| | | E | English with Chinese Displayed Board (Not Applicable to eLogia) |
| | | F | French |
| | | G | German |
| | | I | Italian |
| RDOUT | Readout Kits (PIN 23) | B | Both Discharge & Suction Pressure Transducer Readout required |
| | | Q | Special Pressure Readout required |
| SAFETY | Safety Codes (PIN 24) | C | European Saftey Code ( CE ) |
| | | G | China Safety Code (GB) (Not Applicable to eLogia) |
| | | L | N American Safety Code (cUL/cETL) |
| SENSOR | PIN 25 | X | X |
| | | Q | Special Quote |
| PUMP | Motor Current Module (PIN 26) | C | Motor Current Module |
| | | Q | Special Quote |
| REMOTE | Remote Panel (PIN 27) | X | No Remote Panel required |
| | | Q | Special Remote Panel required |
| SEQ | Sequence Kit (PIN 28) | X | No Sequence Kit required |
| | | Q | Special Sequence Kit required |
| TEMP | Leaving Water Temp (PIN 29,30) | NUM | Leaving Water Temp = Temp/Num Deg. |
| CHICAGO | Chicago Code Kit (PIN 31) | X | No Chicago Code Kit required |
| | | B | Both Chicago Code & Serv Isolation |
| | | C | Chicago Code Kit required |
| | | G | Both Suction Service Valve and Dual Relief Valve (Europe only) |
| | | R | Dual Relief Valves no Suction Service Valve (Europe only) |
| | | S | Service Isolation Valves |
| | | Q | Special Chicago Code Kit required |
| VALVES | Valves (PIN 32) | X | Standard Valves Req'd |
| | | E | Electronic Expansion Valve |
| | | Q | Special Optional Valves Req'd |
| HGBP | Hot Gas Bypass (PIN 33) | X | No Hot Gas Bypass required |
| | | 1 | Hot Gas Bypass required - 1 circuit |
| | | Q | Special Hot Gas Bypass required |
| GAUGE | PIN 34 | X | X |
| | | Q | Special Quote |
| OVERLOAD | PIN 35 | X | X |
| | | Q | Special Quote |
| PIN36 | PIN 36 | X | X |
| | | Q | Special Quote |
| HTR | Crankcase Heater (Pin 37) | H | Crankcase Heater Standard |
| | | Q | Special Crankcase Heater required |
| DWP | DWP (PIN 38) | X | 150psig DWP Waterside |
| | | Q | Special Quote |
| INS | Insulation (PIN 39) | X | Standard Insulation |
| | | D | Double Thick Insulation |
| | | Q | Special Insulation required |

**TABLE 1** - COMPLETE PIN NUMBER DESCRIPTION (CONT'D)

| FEATURE | FEATURE DESCRIPTION | OPTION | OPTION DESCRIPTION |
|---|---|---|---|
| FLANGES | Flanges (PIN 40) | X | No Flanges required |
| | | V | Victaulic Flanges required |
| | | Q | Special Flanges required |
| FLOW | Flow Switch (PIN 41) | X | No Flow Switch required |
| | | S | One Flow Switch Required |
| | | Y | Flow Switch With Extension Kit |
| VESSEL | Vessel Codes (PIN 42) | A | ASME Pressure Vessel Codes |
| | | E | PED Pressure Vessel Codes |
| | | G | GB Pressure Vessel Codes |
| | | Q | Special Quote |
| CLR | Cooler (PIN 43) | X | Standard Cooler required |
| | | Q | Special Cooler required |
| PIN44 | PIN 44 | X | X |
| | | Q | Special Quote |
| COILS | Coils (PIN 45) | X | Aluminum Coils |
| | | P | Post-Coated Dipped Coils |
| | | Q | Special Coils |
| HEAT | Heat Recovery (PIN 46) | X | No Option required |
| | | H | Heat Recovery |
| | | Q | Special Quote |
| FANMOTORS | Fan Motors (PIN 47) | X | TEAO Fan Motors |
| | | Q | Special Fan Motors required |
| ENCL | Enclosure Panels (PIN 48) | X | No Enclosure required |
| | | 1 | Wire (Full Unit) Encl Panels (factory) |
| | | 2 | Wire (Full Unit) Encl Panels (field) |
| | | 3 | Wire/Louvered Encl Panels (factory) |
| | | 4 | Wire/Louvered Encl Panels (field) |
| | | 5 | Louvered (Cond only) Encl Panels (factory) |
| | | 6 | Louvered (Cond only) Encl Panels (field) |
| | | 7 | Louvered (Full Unit) Encl Panels (factory) |
| | | 8 | Louvered (Full Unit) Encl Panels (field) |
| | | 9 | End Louver (End Hail Guard) Encl Panels (factory) |
| | | A | End Louver (End Hail Guard) Encl Panels (field) |
| | | B | Aesthetic Panel Kit only (factory) |
| | | C | Aesthetic Panel Kit only (field) |
| | | D | Aesthetic Panel Kit plus Hail Guards (factory) |
| | | E | Aesthetic Panel Kit plus Hail Guards (field) |
| | | Q | Special Enclosure Panels |
| ACOUSTIC | Acoustic Blanket (PIN 49) | X | No Acoustic Blanket required |
| | | B | Acoustic Blanket Required |
| | | E | Acoustic Enclosure |
| | | Q | Special Acoustic Blanket required |
| SRDOCS | SR Documents (PIN 50) | X | No Documents Required |
| | | A | Base, Material & Witness Documents |
| | | B | Base Document |
| | | M | Base & Material Documents |
| | | W | Base & Witness Documents |
| | | Q | Special Quote |
| PIN 51 | PIN 51 | X | X |
| | | Q | Special Quote |

**TABLE 1** - COMPLETE PIN NUMBER DESCRIPTION (CONT'D)

| FEATURE | FEATURE DESCRIPTION | OPTION | OPTION DESCRIPTION |
|---|---|---|---|
| FANS | Sound Fans (PIN 52) | X | Standard Low Sound Fans required |
| | | A | High Airflow Fans required (Vendor Specific) |
| | | E | Low Sound Fans required (Vendor Specific) |
| | | G | High AirFlow Fans required |
| | | L | Ultra Quiet Fans required |
| | | S | High Static Fans required (Vendor Specific) |
| | | U | Ultra Quiet Fans required (Vendor Specific) |
| | | 2 | Two Speed Fans required (Vendor Specific) |
| | | Q | Special Sound Fans required |
| PAINT | PIN 53 | X | X |
| | | Q | Special Quote |
| ISOL | Vibration Isolators (PIN 54) | X | No Isolators required |
| | | 1 | 1" Deflection Isolators required |
| | | N | Neoprene Isolators required |
| | | S | 2" Deflection Isolators required |
| | | Q | Special Isolators required |
| PIN 55 | PIN 55 | | Marketing Purposes Only! |
| PIN 56 | PIN 56 | | Marketing Purposes Only! |
| SHIP | Ship Instructions (PIN 57) | X | No Containerization required with Shipping Bag |
| | | A | Buy American Act Compliance with Shipping Bag |
| | | B | Both Buy American Act Compliance and Container Shipped without Shipping Bag (Factory Prep) |
| | | C | Container Shipped without Shipping Bag (Factory Load) |
| | | D | Container Shipped with Shipping Bag (Factory Load US Port) |
| | | E | Container Shipped with Shipping Bag (Factory Load Mexico Port) |
| | | F | Container Shipped with Shipping Bag (Factory Prep) |
| | | G | Both Buy America Act Compliance and Container Shipped with Shipping Bag (Factory Prep) |
| | | M | Container Shipped without Shipping Bag (Factory Load Mexico Port) |
| | | N | No Containerization required without Shipping Bag |
| | | P | Container Shipped without Shipping Bag (Factory Prep) |
| | | U | Buy American Act Compliance without Shipping Bag |
| | | Q | Special quote |
| PIN 58 | PIN 58 | | Marketing Purposes Only! |

**TABLE 1** - COMPLETE PIN NUMBER DESCRIPTION (CONT'D)

| FEATURE | FEATURE DESCRIPTION | OPTION | OPTION DESCRIPTION |
|---|---|---|---|
| PKG | Pump Package (PIN 59) | X | No Pump required |
| | | A | Pump Kit A required |
| | | B | Pump Kit B required |
| | | C | Pump Kit C required |
| | | D | Pump Kit D required |
| | | E | Pump Kit E required |
| | | F | Pump Kit F required |
| | | G | Pump Kit G required |
| | | H | Pump Kit H required |
| | | I | Pump Kit I required |
| | | J | Pump Kit J required |
| | | K | Pump Kit K required |
| | | L | Pump Kit L required |
| | | M | Pump Kit M required |
| | | N | Pump Kit N required |
| | | O | Pump Kit O required |
| | | P | Pump Kit P required |
| | | R | Pump Kit R required |
| | | S | Pump Kit S required |
| | | T | Pump Kit T required |
| | | U | Pump Kit U required |
| | | V | Pump Kit V required |
| | | Q | Special quote |
| PKGOPT | Pump Package Options (PIN 60) | X | No option required |
| | | 1 | Single Pump, standard |
| | | 2 | Single Pump, full feature |
| | | 3 | Dual Pump, standard |
| | | 4 | Dual Pump, full feature |
| | | Q | Special quote |
| PIN 61 | PIN 61 | | Marketing Purposes Only! |
| LOC | Mfg Location | GZ | Guangzhou, China |
| | | MTY | Monterrey, Mexico |
| | | SAT | San Antonio, Texas |

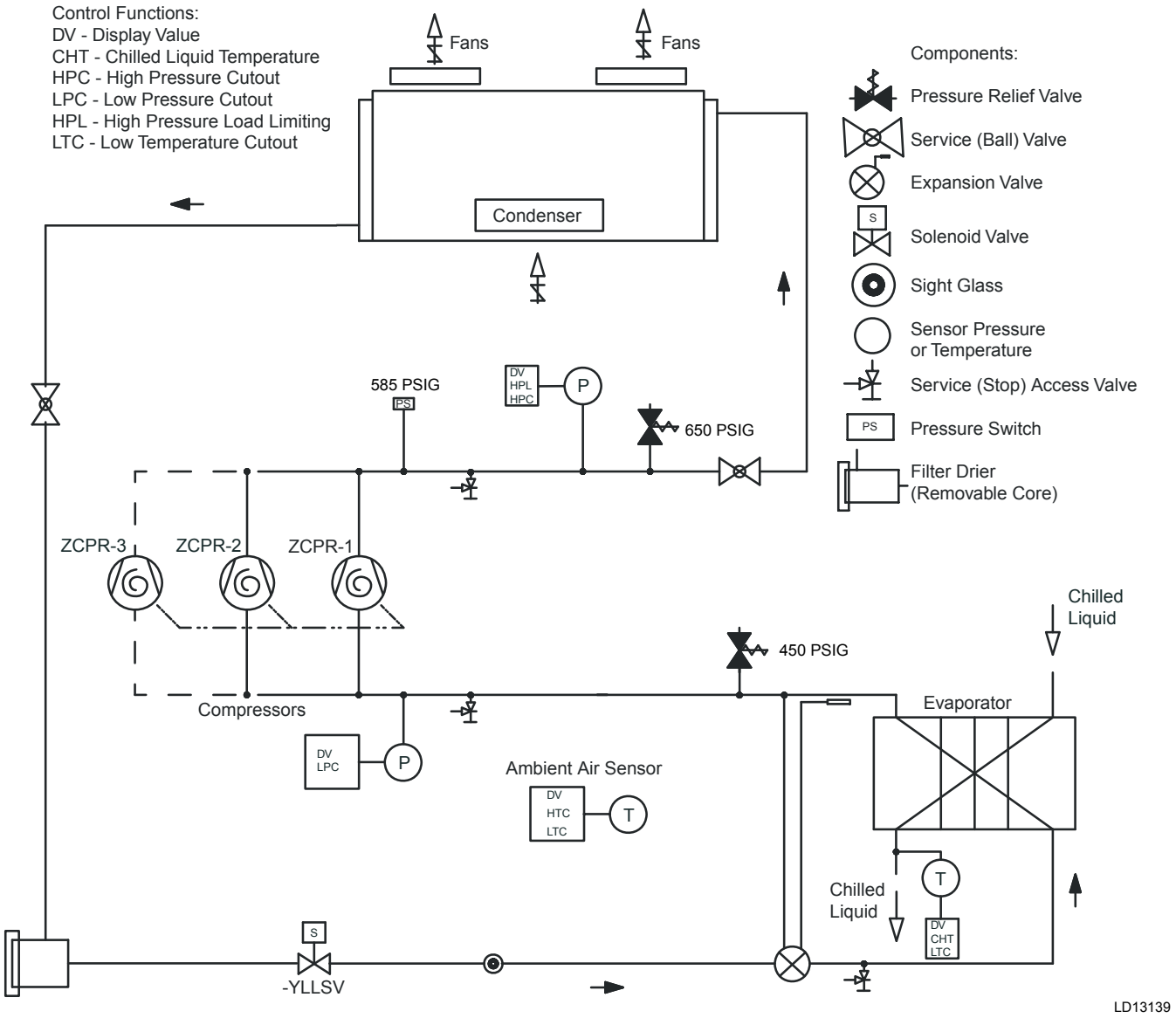


**FIGURE 5 -** PROCESS AND INSTRUMENTATION DIAGRAM

Low pressure liquid refrigerant enters the cooler and is evaporated and superheated by the heat energy absorbed from the chilled liquid passing through the cooler shell. Low pressure vapor enters at the compressor where pressure and superheat are increased. The high pressure vapor is fed to the air cooled condenser coil and fans where the heat is removed. The fully condensed and subcooled liquid passes through the expansion valve where pressure is reduced and further cooling takes place before entering to the cooler.

THIS PAGE INTENTIONALLY LEFT BLANK

# SECTION 3 – HANDLING AND STORAGE

## DELIVERY AND STORAGE

To ensure consistent quality and maximum reliability, all units are tested and inspected before leaving the factory. Units are shipped completely assembled and containing refrigerant under pressure. Units are shipped without export crating unless crating has been specified on the Sales Order.

If the unit is to be put into storage, prior to installation, the following precautions should be observed:

- The chiller must be “blocked” so that the base is not permitted to sag or bow.
- Ensure that all openings, such as water connections, are securely capped.
- Do not store where exposed to ambient air temperatures exceeding 110 °F (43 °C).
- The condensers should be covered to protect the fins from potential damage and corrosion, particularly where building work is in progress.
- The unit should be stored in a location where there is minimal activity in order to limit the risk of accidental physical damage.
- To prevent inadvertent operation of the pressure relief devices the unit must not be steam cleaned.
- It is recommended that the unit is periodically inspected during storage.

## INSPECTION

Remove any transit packing and inspect the unit to ensure that all components have been delivered and that no damage has occurred during transit. If any damage is evident, it should be noted on the carrier’s freight bill and a claim entered in accordance with the instructions given on the advice note.

Major damage must be reported immediately to your local Johnson Controls representative.

## MOVING THE CHILLER

Prior to moving the unit, ensure that the installation site is suitable for installing the unit and is easily capable of supporting the weight of the unit and all associated services.

The units are designed to be lifted using cables. A spreader bar or frame should be used in order to prevent damage to the unit from the lifting chains.

Units are provided with lifting eyes in the sides of the base frame, which can be attached to directly using shackles or safety hooks.

WARNING

***The unit must only be lifted by the base frame at the points provided. Never move the unit on rollers, or lift the unit using a forklift truck.***

Care should be taken to avoid damaging the condenser cooling fins when moving the unit.

### Lifting Weights

For details of weights and weight distribution, refer to the data shipped in the chiller information packet and unit nameplate.

WARNING

***The unit should be lifted by inserting hooks through the holes provided in unit base rails. Spreader bars should be used to avoid crushing the unit frame rails with the lifting chains (see Figure 6 on page 32).***

## Rigging Instructions

### *Lifting Unit*

Container lugs should be inserted into the holes provided in the bottom of the frame rail.

Use spreader bars to avoid lifting chains hitting the chiller. Various methods of spreader bar arrangements may be used; keeping in mind the intent is to keep the unit stable and to keep the chains from hitting the chiller and causing damage.

CAUTION

***Never lift the chiller using a forklift or by hooking to the top rails. Use only the lifting holes provided.***

Lifting instructions are placed on a label on the chiller and on the shipping bag.

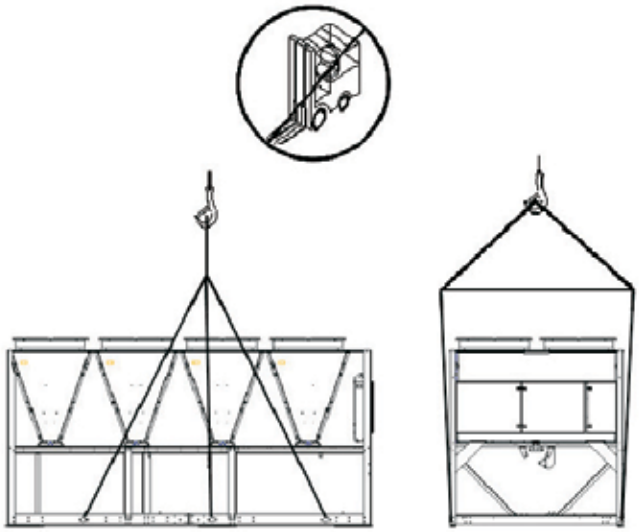

TYPICAL LIFTING ARRANGEMENT - 8 FAN MODELS

LD13137

LD16706a

TYPICAL LIFTING ARRANGEMENT - 4 FAN MODELS

**FIGURE 6 -** UNIT RIGGING/LIFTING

## LIFTING USING LUGS

Units are provided with lifting holes in the base frame which accept the accessory lifting lug set as shown in the figure below. The lugs (RH and LH) should be inserted into the respective holes in the base frame and turned so that the spring loaded pin engages into the hole and the flanges on the lug lock behind the hole. The lugs should be attached to the cables/chains using shackles or safety hooks.

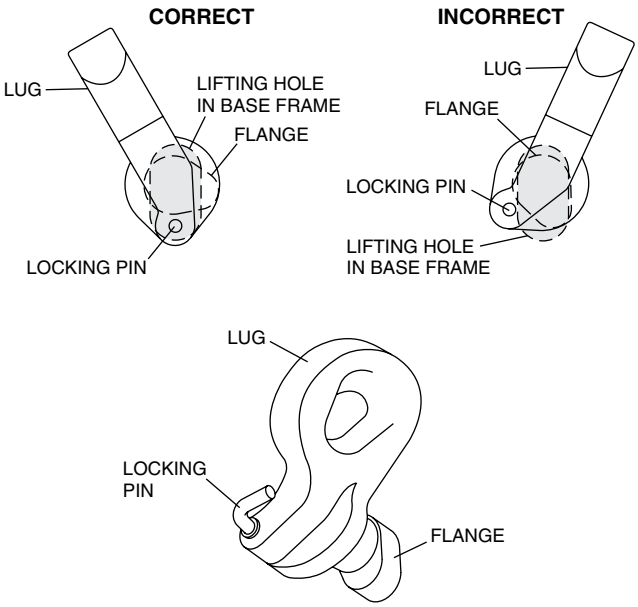


## LIFTING USING SHACKLES

The shackles should be inserted into the respective holes in the base frame and secured from the inside.

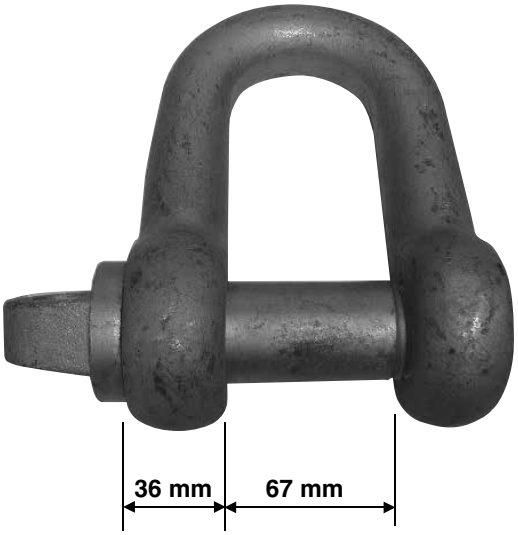


Use spreader bars to avoid lifting chains hitting the chiller. Various methods of spreader bar arrangements may be used, keeping in mind the intent is to keep the unit stable and to keep the chains from hitting the chiller and causing damage.

CAUTION

***Never lift the chiller using a forklift or by hooking to the top rails. Use only the lifting holes provided.***

Lifting Instructions are placed on a label on the chiller and on the shipping bag.

3

THIS PAGE INTENTIONALLY LEFT BLANK

# SECTION 4 – INSTALLATION

WARNING

***To ensure warranty coverage, this equipment must be commissioned and serviced by an authorized Johnson Controls service mechanic or a qualified service person experienced in chiller installation. Installation must comply with all applicable codes, particularly in regard to electrical wiring and other safety elements such as relief valves, HP cutout settings, design working pressures, and ventilation requirements consistent with the amount and type of refrigerant charge.***

***Lethal voltages exist within the control panels. Before servicing, open and tag all disconnect switches.***

## INSTALLATION CHECKLIST

The following items, 1 through 6, must be checked before placing the units in operation.

1. Inspect the unit for shipping damage.
2. Rig unit using spreader bars.
3. Open the unit only to install water piping system. Do not remove protective covers from water connections until piping is ready for attachment. Check water piping to ensure cleanliness.
4. Pipe unit using good piping practice (see ASHRAE handbook section 215 and 195).
5. Check to see that wiring is tight and meets NEC and local codes.
6. Check to see that the unit is installed and operated within limitations (Refer *Operational Limitations (English) on page 43*).

## STARTUP/COMMISSIONING

The following pages outline detailed procedures to be followed to install and start-up the chiller.

## LOCATION AND CLEARANCES

Units are designed for outdoor installations on ground level, rooftop, or beside a building. Location should be selected for minimum sun exposure and to insure adequate supply of fresh air for the condenser. The units must be installed with sufficient clearances for air entrance to the condenser coil, for air discharge away from the condenser, and for servicing access.

In installations where winter operation is intended and snow accumulations are expected, additional height must be provided to ensure normal condenser air flow.

Clearances are listed in *Figure 22 on page 84*.

### Foundation

The unit should be mounted on a flat and level foundation, floor, or rooftop capable of supporting the entire operating weight of the equipment. See *Physical Data YLAA0070 – YLAA0175 60Hz on page 46* for operating weight. If the unit is elevated beyond the normal reach of service personnel, a suitable catwalk must be capable of supporting service personnel, their equipment, and the compressors.

### Ground Level Locations

It is important that the units be installed on a substantial base that will not settle. A one piece concrete slab with footers extended below the frost line is highly recommended. Additionally, the slab should not be tied to the main building foundations as noise and vibration may be transmitted. Mounting holes (5/8” dia.) are provided in the steel channel for bolting the unit to its foundation (see *Dimensions on page 78*).

For ground level installations, precautions should be taken to protect the unit from tampering by or injury to unauthorized persons. Screws and/or latches on access panels will prevent casual tampering. However, further safety precautions such as a fenced-in enclosure or locking devices on the panels may be advisable.

### Rooftop Locations

Choose a spot with adequate structural strength to safely support the entire weight of the unit and service personnel. Care must be taken not to damage the roof.

Consult the building contractor or architect if the roof is bonded. Roof installations should have wooden beams (treated to reduce deterioration), cork, rubber, or spring type vibration isolators under the base to minimize vibration.

### Noise Sensitive Locations

Efforts should be made to assure that the chiller is not located next to occupied spaces or noise sensitive areas where chiller noise level would be a problem. Chiller noise is a result of compressor and fan operation.

## SPRING ISOLATORS (OPTIONAL)

When ordered, isolators will be furnished. Identify the isolator, locate at the proper mounting point, and adjust per instructions.

## COMPRESSOR MOUNTING

The compressors are mounted on four (4) rubber isolators. The mounting bolts should not be loosened or adjusted at installation of the chiller.

## REMOTE COOLER OPTION

Not available at this time.

## CHILLED LIQUID PIPING

**General –** When the unit(s) has been located in its final position, the unit water piping may be connected. Normal installation precautions should be observed in order to receive maximum operating efficiencies. Piping should be kept free of all foreign matter. All chilled water evaporator piping must comply in all respects with local plumbing codes and ordinances.

Since elbows, tees and valves decrease pump capacity, all piping should be kept as straight and as simple as possible. **All piping must be supported independent of the chiller.**

NOTE

***Consideration should be given to compressor access when laying out water piping. Routing the water piping too close to the unit could make compressor servicing/ replacement difficult.***

Hand stop valves should be installed in all lines to facilitate servicing.

Piping to the inlet and outlet connections of the chiller should include high-pressure rubber hose or piping loops to ensure against transmission of water pump vibration. The necessary components must be obtained in the field.

Drain connections should be provided at all low points to permit complete drainage of the cooler and system water piping.

A small valve or valves should be installed at the highest point or points in the chilled water piping to allow any trapped air to be purged. Vent and drain connections should be extended beyond the insulation to make them accessible.

The piping to and from the cooler must be designed to suit the individual installation. It is important that the following considerations be observed:

1. The chilled liquid piping system should be laid out so that the circulating pump discharges directly into the cooler. The suction for this pump should be taken from the piping system return line and not the cooler. This piping scheme is recommended, but is not mandatory.
2. The inlet and outlet cooler connection sizes are provided in *Table 5 on page 46* (Physical Data).
3. A 1/16” mesh strainer is provided at the cooler inlet line just ahead of the cooler. This is important to protect the cooler from entrance of large particles which could cause damage to the evaporator.
4. All chilled liquid piping should be thoroughly flushed to free it from foreign material before the system is placed into operation. Use care not to flush any foreign material into or through the cooler.
5. As an aid to servicing, thermometers and pressure gauges should be installed in the inlet and outlet water lines.
6. The chilled water lines that are exposed to outdoor ambients should be wrapped with supplemental heater cable and insulated to protect against freeze-up during low ambient periods, and to prevent formation of condensation on lines in warm humid locations. As an alternative, ethylene glycol should be added to protect against freeze-up during low ambient periods.
7. A chilled water flow switch, (either by YORK or others) MUST be installed in the leaving water piping of the cooler. If the factory wired flow switch and extension pipe kit is not selected, the field installed flow switch must be installed so that there is a straight horizontal run of at least 5 diameters on each side of the switch. Adjust the flow switch paddle to the size of the pipe in which it is to be installed (see manufacturer’s instructions furnished with the switch). The switch is to be wired to Terminals 13 and 14 of XTBC1 located in the control panel, as shown on the unit wiring diagram.

CAUTION

***The Flow Switch MUST NOT be used to start and stop the chiller (i.e. starting and stopping the chilled water pump). It is intended only as a safety switch.***

## PIPEWORK ARRANGEMENT

The following are suggested pipework arrangements for single unit installations, for multiple unit installations, each unit should be piped as shown.

**Recommendations of the Building Services Research Association.**

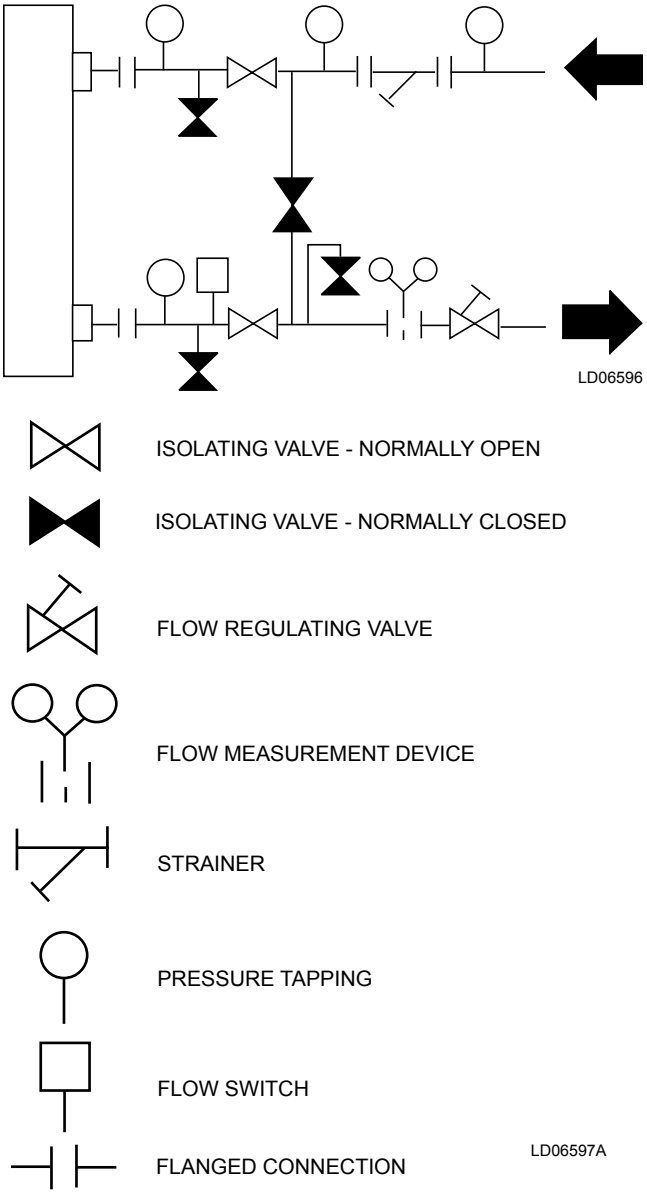


**FIGURE 7 -** CHILLED LIQUID SYSTEM

### Fan Discharge Ducting

The following duct work recommendations are intended to ensure satisfactory operation of the unit. Failure to follow these recommendations could cause damage to the unit, or loss of performance, and may invalidate the warranty.

When ducting is to be fitted to the fan discharge it is recommended that the duct should be the same cross-sectional area as the fan outlet and straight for at least three feet (1 meter) to obtain static regain from the fan. Duct work should be suspended with flexible hangers to prevent noise and vibration being transmitted to the structure. A flexible joint is also recommended between the duct attached to the fan and the next section for the same reason. Flexible connectors should not be allowed to concertina.

The unit is not designed to take structural loading. No significant amount of weight should be allowed to rest on the fan outlet flange, deck assemblies or condenser coil module. No more than 3 feet (1 meter) of light construction duct work should be supported by the unit. Where cross winds may occur, any duct work must be supported to prevent side loading on the unit.

If the ducts from two or more fans are to be combined into a common duct, back-flow dampers should be fitted in the individual fan ducts. This will prevent recirculation of air when only one of the fans is running.

Units are supplied with outlet guards for safety and to prevent damage to the fan blades. If these guards are removed to fit duct work, adequate alternative precautions must be taken to ensure persons cannot be harmed or put at risk from rotating fan blades.

## WIRING

Liquid Chillers are shipped with all factory-mounted controls wired for operation.

**Field Wiring** – Power wiring must be provided through a fused disconnect switch to the unit terminals (or optional molded disconnect switch) in accordance with N.E.C. or local code requirements. Minimum circuit ampacity and maximum dual element fuse size are given in the Electrical Data tables.

Copper power wiring only should be used for supplying power to the chiller. This is recommended to avoid safety and reliability issues resulting from connection failure at the power connections to the chiller. Aluminum wiring is not recommended due to thermal characteristics that may cause loose terminations resulting from the contraction and expansion of the wiring. Aluminum oxide may also build up at the termination causing hot spots and eventual failure. If aluminum wiring is used to supply power to the chiller, AL-CU compression fittings should be used to transition from

aluminum to copper. This transition should be done in an external box separate to the power panel. Copper conductors can then be run from the box to the chiller.

A 120-1-60, 15 amp source must be supplied for the control panel through a fused disconnect when a control panel transformer (optional) is not provided (Refer to *Figure 8 on page 39*).

See unit wiring diagrams for field and power wiring connections, chilled water pump starter contacts, alarm contacts, compressor run status contacts, PWM input, and load limit input. Refer to *SECTION 8 – UNIT OPERATION* for a detailed description of operation concerning aforementioned contacts and inputs.

## RELIEF VALVES

Relief valves are located on both the high and low pressure side of the piping. High side relief valve pressure setting is 650 PSIG. Low side relief valve pressure setting is 450 PSIG.

## HIGH PRESSURE CUTOUT

A high pressure cutout is installed in the discharge piping of each system. The cutout opens at 585 PSIG plus or minus 10 PSIG and closes at 440 PSIG plus or minus 25 PSIG.

### Evaporator Pump Start Contacts

Terminal block XTBC2 – Terminals 23 (115VAC) to 24, are normally- open contacts that can be used to switch field supplied power to provide a start signal to the evaporator pump contactor. The contacts will be closed when any of the following conditions occur:

1. Low Leaving Chilled Liquid Fault
2. Any compressor is running
3. Daily schedule is not programmed OFF and the Unit Switch is ON

The pump will not run if the micro panel has been powered up for less than 30 seconds, or if the pump has run in the last 30 seconds, to prevent pump motor overheating. Refer to *Figure 10 on page 41* and unit wiring diagram.

### System Run Contacts

Contacts are available to monitor system status. Normally-open auxiliary contacts from each compressor contactor are wired in parallel with XTBC2 – Terminals 25 to 26 for system 1, and XTBC2 – Terminals 27 to 28 for system 2. Refer to *Figure 4 on page 23*, *Figure 10 on page 41* and unit wiring diagram.

### Alarm Status Contacts

Normally-open contacts are available for each refrigerant system. These normally-open contacts close when the system is functioning normally. The respective contacts will open when the unit is shut down on a unit fault, or locked out on a system fault. Field connections are at XTBC2 - Terminals 29 to 30 (system 1), and Terminals 31 to 32 (system 2).

### Remote Start/Stop Contacts

To remotely start and stop the chiller, dry contacts can be wired across terminals 13 and 51 on XTBC1. Refer to *Figure 4 on page 23*, *Figure 9 on page 40* and unit wiring diagram.

### Remote Emergency Cutoff

Immediate shutdown of the chiller can be accomplished by opening a field-installed dry contact to break the electrical circuit between Terminals 5 to L on terminal block XTBC2 . The unit is shipped with a factory jumper installed between Terminals 5 to L, which must be removed if emergency shutdown contacts are installed. Refer to *Figure 9 on page 40* and unit wiring diagram.

### Remote Temp Reset Input

The Remote Temp Reset input allows reset of the chilled liquid setpoint by supplying a voltage or current signal field wiring should be connected to XTBC1 – Terminals A+ to A-. A detailed explanation is provided in *SECTION 7 – UNIT CONTROLS*. Refer to *Figure 3 on page 22*, *Figure 4 on page 23* and unit wiring diagram.

### Load Limit Input

Load limiting is a feature that prevents the unit from loading beyond a desired value. The unit can be “load limited” either 33%, 40%, 50%, 66% or 80%, depending on the number of compressors on unit. The field connections are wired to XTBC1 – Terminals 13 to 21, and work in conjunction with the PWM inputs. A detailed explanation is provided in *SECTION 7 – UNIT CONTROLS*. Refer to *Figure 4 on page 23*, *Figure 9 on page 40* and unit wiring diagram.

NOTE

***When using the Load Limit feature, the PWM feature will not function – SIMULTANEOUS OPERATION OF LOAD LIMITING AND TEMPERATURE RESET (PWM INPUT) CANNOT BE DONE.***

## SINGLE-POINT SUPPLY CONNECTION – TERMINAL BLOCK, NON-FUSED DISCONNECT SWITCH OR CIRCUIT BREAKER

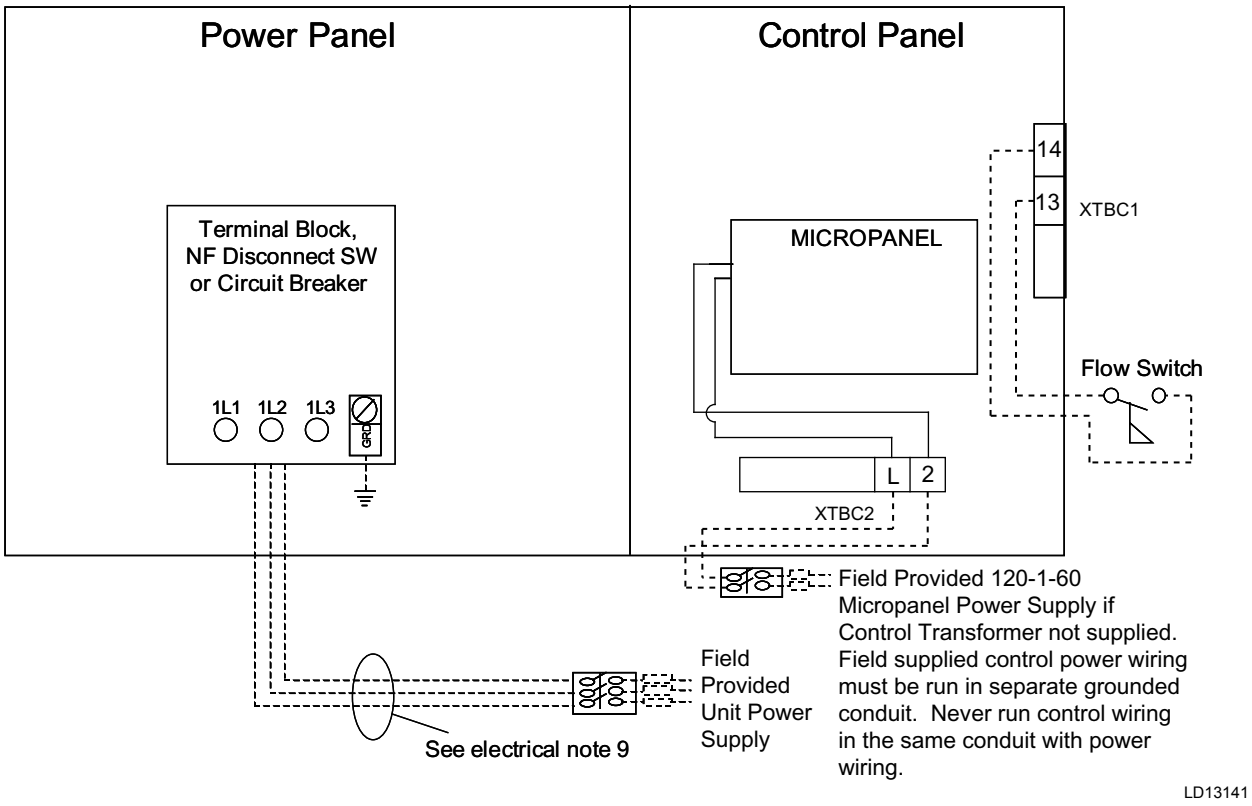

***It is possible that multiple sources of power can be supplying the unit power panel. To prevent serious injury or death, the technician should verify that NO LETHAL VOLTAGES are present inside the panel AFTER disconnecting power, PRIOR to working on equipment.***

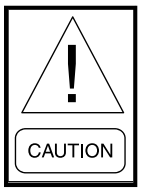


***The unit evaporator heater uses 120VAC. Disconnecting 120VAC power from the unit, at or below freezing temperatures, can result in damage to the evaporator and unit as a result of the chilled liquid freezing.***

**FIGURE 8 -** SINGLE-POINT SUPPLY CONNECTION – TERMINAL BLOCK, NON-FUSED DISCONNECT SWITCH OR CIRCUIT BREAKER OR CIRCUIT BREAKER

# USER CONTROL WIRING INPUTS

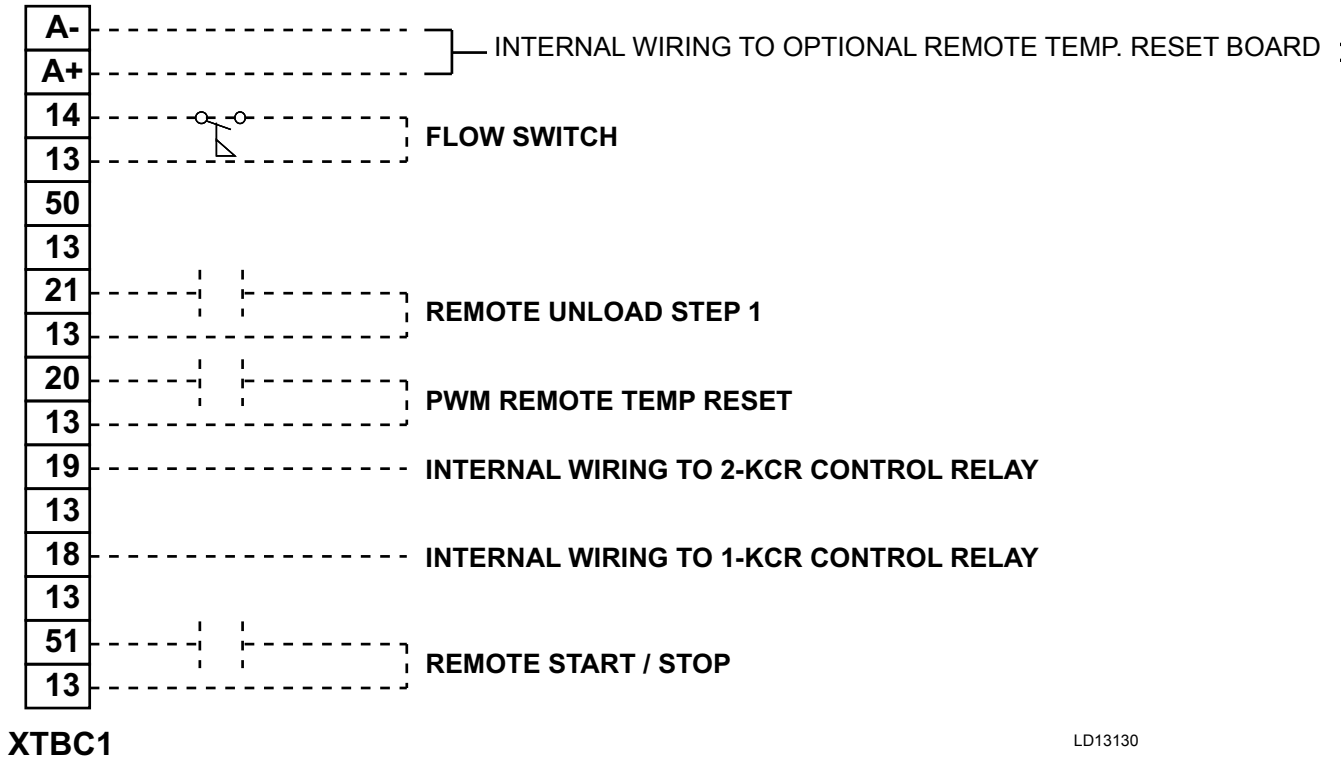


NOTE

***All externally supplied contacts must be capable of switching 24VDC / 115 VAC. Gold contacts are recommended. If supplied contacts are from a Relay / Contactor (Inductive Load), the coil of the Relay / Contactor must be suppressed. Typical suppressor is P/N 031-00808-000.***

WARNING

***It is possible that multiple sources of power can be supplying the unit power panel. To prevent serious injury or death, the technician should verify that NO LETHAL VOLTAGES are present inside the panel AFTER disconnecting power, PRIOR to working on equipment.***

CAUTION

***The unit evaporator heater uses 120VAC. Disconnecting 120VAC power from the unit, at or below freezing temperatures, can result in damage to the evaporator and unit as a result of the chilled liquid freezing.***

**FIGURE 9 -** CONTROL WIRING INPUTS

# USER CONTROL WIRING OUTPUTS

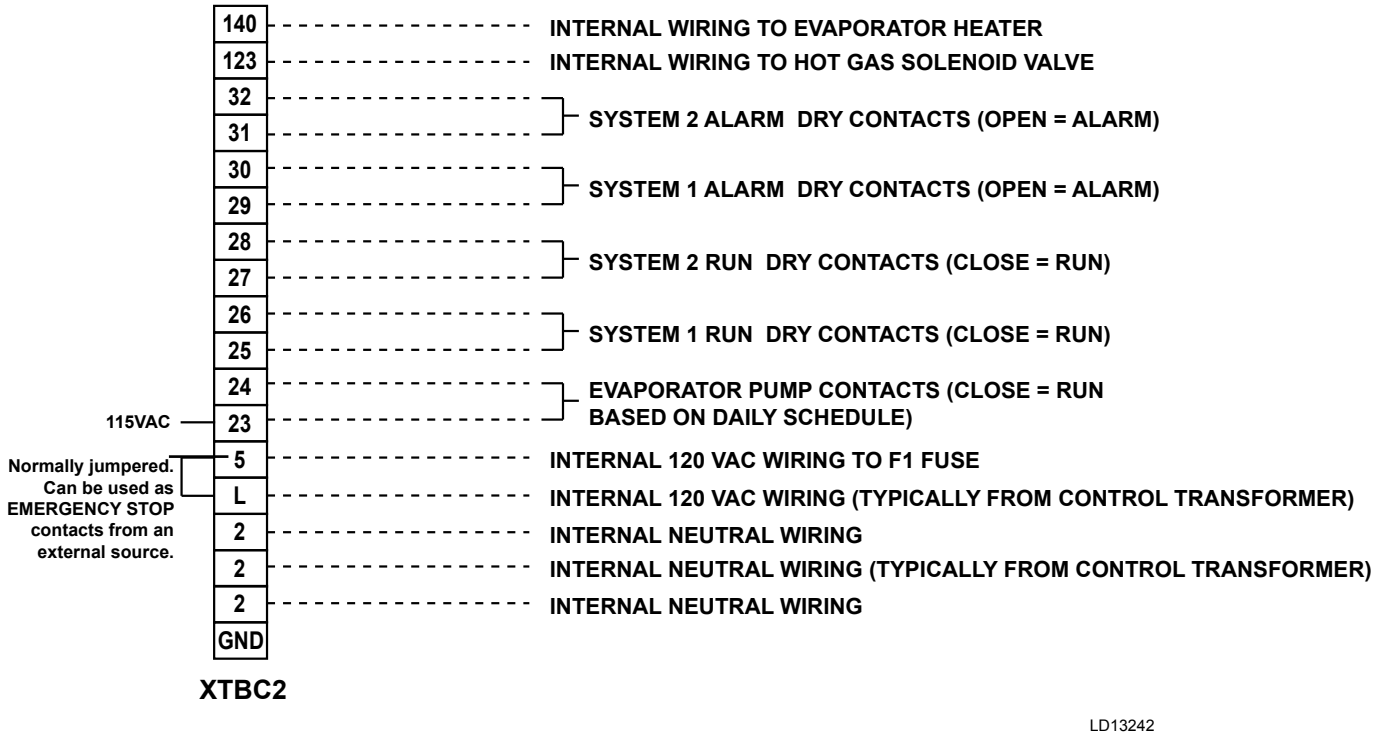


NOTE

***All chiller supplied contacts are rated at 115VAC, 100VA, resistive load only, and must be suppressed at the load by user if powering an inductive load (Relay / Contactor Coil). Typical suppressor P/N is 031-00808-000.***

CAUTION

***The unit evaporator heater uses 120VAC. Disconnecting 120VAC power from the unit, at or below freezing temperatures, can result in damage to the evaporator and unit as a result of the chilled liquid freezing.***

WARNING

***It is possible that multiple sources of power can be supplying the unit power panel. To prevent serious injury or death, the technician should verify that NO LETHAL VOLTAGES are present inside the panel AFTER disconnecting power, PRIOR to working on equipment.***

**FIGURE 10 -** CONTROL WIRING OUTPUTS

THIS PAGE INTENTIONALLY LEFT BLANK

# SECTION 5 – TECHNICAL DATA
# OPERATIONAL LIMITATIONS (ENGLISH)

**TABLE 3 -** TEMPERATURES AND FLOWS

| UNIT DESIGNATION | TEMPERATURE | | WATER FLOW (GPM) MIN | WATER FLOW (GPM) MAX | AIR ON CONDENSER (°F) | |
|---|---|---|---|---|---|---|
| | MIN[1] | MAX[2] | | | MIN[3] | MAX[4] |
| **STANDARD EFFICIENCY** | | | | | | |
| **YLAA0070SE** | 40 | 55 | 60 | 285 | 0 | 125 |
| **YLAA0080SE** | 40 | 55 | 100 | 355 | 0 | 125 |
| **YLAA0090SE** | 40 | 55 | 100 | 385 | 0 | 125 |
| **YLAA0100SE** | 40 | 55 | 100 | 385 | 0 | 125 |
| **YLAA0115SE** | 40 | 55 | 100 | 385 | 0 | 125 |
| **YLAA0120SE** | 40 | 55 | 150 | 625 | 0 | 125 |
| **YLAA0136SE** | 40 | 55 | 150 | 625 | 0 | 125 |
| **YLAA0155SE** | 40 | 55 | 150 | 625 | 0 | 125 |
| **YLAA0170SE** | 40 | 55 | 150 | 625 | 0 | 125 |
| **HIGH EFFICIENCY** | | | | | | |
| **YLAA0091HE** | 40 | 55 | 100 | 385 | 0 | 125 |
| **YLAA0101HE** | 40 | 55 | 100 | 385 | 0 | 125 |
| **YLAA0125HE** | 40 | 55 | 100 | 385 | 0 | 125 |
| **YLAA0142HE** | 40 | 55 | 150 | 625 | 0 | 125 |
| **YLAA0156HE** | 40 | 55 | 150 | 625 | 0 | 125 |
| **YLAA0175HE** | 40 | 55 | 150 | 625 | 0 | 125 |

**NOTES:**
1. For leaving liquid temperature below 40°F (4°C) (to 10°F [-12°C]) optional low temperature glycol kit required. Contact your nearest Johnson Controls Office for application requirements.
2. For leaving liquid temperature higher than 55°F (13°C), contact the nearest Johnson Controls Office for application guidelines.
3. The evaporator is protected against freezing to -20°F (-29°C) with an electric heater as standard.
4. For operation at temperatures above 115°F (46°C), the optional High Ambient Kit will need to be installed on the system.

CAUTION

***Excessive flow will cause damage to the cooler. Do not exceed maximum cooler flow. Special care should be taken when multiple chillers are fed by a single pump.***

# HEAT EXCHANGER FLOW, GPM

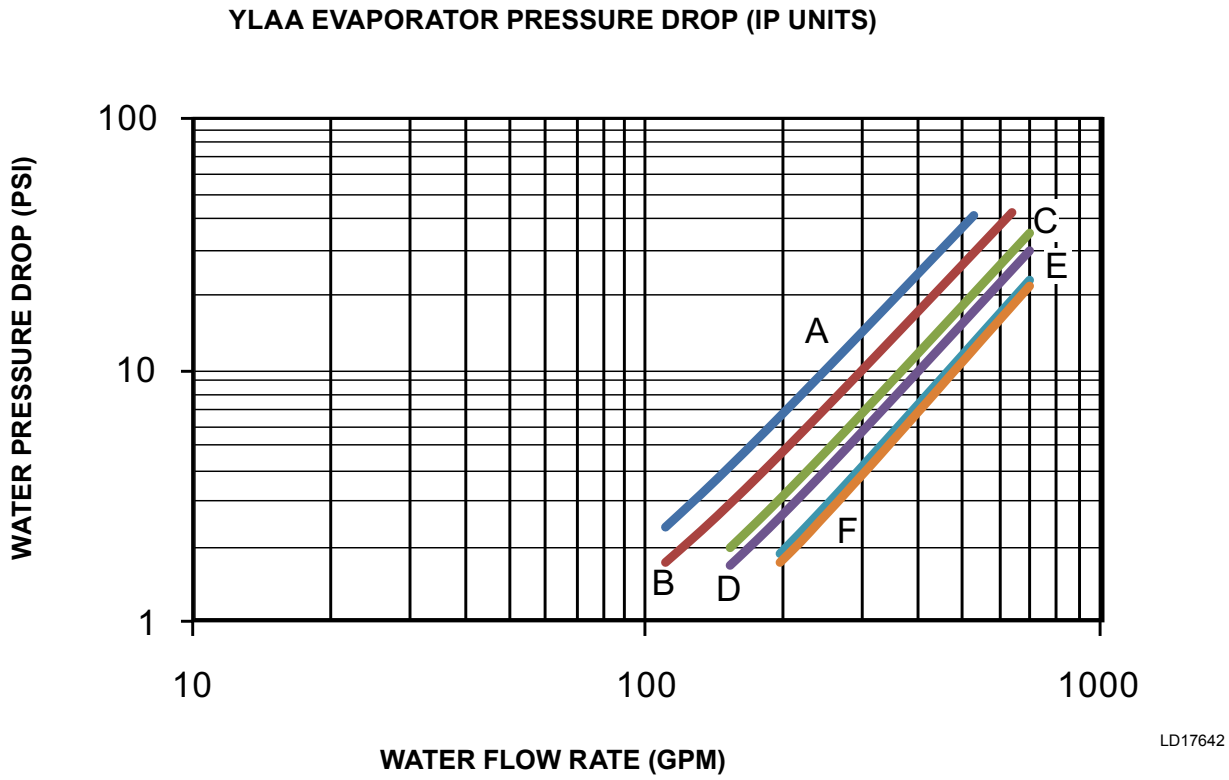


| EVAPORATOR | YLAA MODELS |
|---|---|
| A | 70SE |
| B | 80SE |
| C | 90SE,91HE, 100SE, 101HE, 115SE, 0125HE |
| D | 0136SE, 0170SE, 0156HE |
| E | 0120SE, 0155SE, 0142HE |
| F | 0175HE |

**TABLE 4 -** ETHYLENE AND PROPYLENE GLYCOL CORRECTION FACTORS

**ETHYLENE GLYCOL**

| % WEIGHT | TONS | COMPR KW | GPM F/ TON | PRESS DROP | FREEZE PT |
|---|---|---|---|---|---|
| **10.0** | 1.0 | 1.0 | 24.3 | 1.0 | 26.2 |
| **20.0** | 1.0 | 1.0 | 25.1 | 1.1 | 17.9 |
| **30.0** | 1.0 | 1.0 | 25.9 | 1.2 | 6.7 |
| **40.0** | 1.0 | 1.0 | 26.9 | 1.4 | -8.1 |
| **50.0** | 1.0 | 1.0 | 28.0 | 1.6 | -28.9 |

**PROPYLENE GLYCOL**

| % WEIGHT | TONS | COMPR KW | GPM F/ TON | PRESS DROP | FREEZE PT |
|---|---|---|---|---|---|
| **10.0** | 1.0 | 1.0 | 24.0 | 1.0 | 26.0 |
| **20.0** | 1.0 | 1.0 | 24.3 | 1.1 | 19.0 |
| **30.0** | 1.0 | 1.0 | 24.9 | 1.3 | 9.0 |
| **40.0** | 1.0 | 1.0 | 25.6 | 1.4 | -6.0 |
| **50.0** | 0.9 | 1.0 | 26.6 | 1.7 | -28.0 |

**NOTE:** Water Pressure Drop Curves may extend past the minimum and maximum water flow ranges.

THIS PAGE INTENTIONALLY LEFT BLANK

# PHYSICAL DATA YLAA0070 – YLAA0175 60HZ

**TABLE 5 -** PHYSICAL DATA (ENGLISH) 60 HZ

| REFRIGERANT R-410A | YLAA | | | | | | | | |
|---|---|---|---|---|---|---|---|---|---|
| | STANDARD EFFICIENCY UNITS | | | | | | | | |
| | 0070SE | 0080SE | 0090SE | 0100SE | 0115SE | 0120SE | 0136SE | 0155SE | 0170SE |
| **NOMINAL RATINGS[3]** | | | | | | | | | |
| TONS | 71.8 | 77.7 | 83.9 | 95.8 | 113.9 | 119.6 | 126.1 | 143.0 | 167.4 |
| KW INPUT | 78.1 | 87.7 | 96.6 | 110.7 | 130.8 | 133.2 | 142.6 | 165.0 | 192.1 |
| EER | 10.2 | 9.9 | 9.7 | 9.7 | 9.7 | 10.0 | 9.7 | 9.8 | 9.6 |
| IPLV | 16.0 | 15.4 | 15.5 | 14.3 | 14.6 | 14.8 | 15.8 | 15.9 | 15.6 |
| **GENERAL UNIT DATA** | | | | | | | | | |
| Length | 116.1 | 116.1 | 116.1 | 142.7 | 142.7 | 142.7 | 187.7 | 187.7 | 232.7 |
| Width | 88 | 88 | 88 | 88 | 88 | 88 | 88 | 88 | 88 |
| Height | 94.2 | 94.2 | 94.2 | 94.2 | 94.2 | 94 | 94.2 | 94.2 | 94.2 |
| Number Of Refrigerant Circuits | 2 | 2 | 2 | 2 | 2 | 2 | 2 | 2 | 2 |
| **REFRIGERANT CHARGE, OPERATING** | | | | | | | | | |
| R-410A, CKT1/CKT2, LBS | 43/43 | 47/44 | 57/57 | 55/58 | 60/58 | 54/62 | 75/71 | 75/70 | 90/87 |
| Oil Charge, CKT1/CKT2, Gallons | 2.58/ 2.58 | 3.28/ 2.58 | 3.28/ 2.76 | 3.28/ 3.33 | 3.33/ 3.33 | 3.33/ 3.33 | 4.99/ 2.73 | 4.99/ 3.33 | 4.99/ 4.99 |
| Shipping Weight | 3578 | 3898 | 4168 | 4791 | 5028 | 5183 | 6148 | 6414 | 7734 |
| Operating Weight | 3623 | 3954 | 4241 | 4864 | 5101 | 5293 | 6232 | 6524 | 7818 |
| **COMPRESSORS, SCROLL TYPE** | | | | | | | | | |
| Compressors Per Circuit | 3/3 | 3/3 | 3/2 | 3/2 | 2/2 | 3/2 | 3/3 | 3/2 | 3/3 |
| Compressors Per Unit | 6 | 6 | 5 | 5 | 4 | 4 | 6 | 5 | 6 |
| **NOMINAL TONS PER COMPRESSOR** | | | | | | | | | |
| Circuit 1 | 13 | 15 | 15 | 15 | 32 | 32 | 32 | 32 | 32 |
| Circuit 2 | 13 | 13 | 15/32 | 32 | 32 | 32 | 15 | 32 | 32 |
| Condenser | | | | | | | | | |
| Total Face Area $Ft^2$ | 106.9 | 106.9 | 106.9 | 133.6 | 160.3 | 160.3 | 213.8 | 213.8 | 267.2 |
| Number Of Rows | 1 | 1 | 1 | 1 | 1 | 1 | 1 | 1 | 1 |
| Fins Per Inch | 20 | 20 | 20 | 20 | 20 | 20 | 20 | 20 | 20 |
| **CONDENSER FANS, LOW SOUND** | | | | | | | | | |
| Number Of Fans, CKT 1/CKT 2 | 2/2 | 2/2 | 2/2 | 3/2 | 3/3 | 3/3 | 4/4 | 4/4 | 5/5 |
| Fan HP | 2 | 2 | 2 | 2 | 2 | 2 | 2 | 2 | 2 |
| Fan RPM | 1160 | 1160 | 1160 | 1160 | 1160 | 1160 | 1160 | 1160 | 1160 |
| Total Chiller CFM | 62400 | 62400 | 62400 | 78000 | 93600 | 93600 | 124800 | 124800 | 156000 |
| **EVAPORATOR** | | | | | | | | | |
| Water Volume, Gallons | 5.4 | 6.7 | 8.8 | 8.8 | 8.8 | 13.2 | 10.0 | 13.2 | 10.0 |
| Maximum Water Side Pressure, PSIG | 150 | 150 | 150 | 150 | 150 | 150 | 150 | 150 | 150 |
| Maximum Refrigerant Side Pressure, PSIG | 450 | 450 | 450 | 450 | 450 | 450 | 450 | 450 | 450 |
| Minimum Chiller Water Flow Rate, GPM | 60 | 100 | 140 | 100 | 100 | 150 | 150 | 150 | 150 |
| Maximum Chiller Water Flow Rate, GPM | 285 | 355 | 625 | 385 | 385 | 625 | 625 | 625 | 625 |
| Water Connections Size, Inches | 3 | 3 | 3 | 3 | 3 | 3 | 3 | 3 | 3 |

**NOTES:**
1. kW = Compressor Input Power.
2. EER = Chiller EER (includes power from compressors, fans, and the control panels 0.8 kW).
3. Rated in accordance with AHRI Standard 550/590 at an air on condenser temperature of 95°F and a leaving chilled water temperature of 44°F.
4. Additional rating information can be provided by your local Johnson Controls Sales Office.

**TABLE 5 -** PHYSICAL DATA (ENGLISH) 60 HZ (CONT'D)

| REFRIGERANT R-410A | YLAA | | | | | |
|---|---|---|---|---|---|---|
| | HIGH EFFICIENCY UNITS | | | | | |
| | 0091HE | 0101HE | 0125HE | 0142HE | 0156HE | 0175HE |
| **NOMINAL RATINGS[3]** | | | | | | |
| TONS | 88.2 | 98.5 | 116.0 | 129.5 | 144.5 | 172.5 |
| KW INPUT | 88.2 | 106.1 | 122.0 | 138.9 | 153.0 | 194.2 |
| EER | 10.8 | 10.2 | 10.3 | 10.2 | 10.2 | 9.8 |
| IPLV | 15.0 | 15.4 | 15.7 | 15.9 | 15.5 | 15.6 |
| **GENERAL UNIT DATA** | | | | | | |
| Length | 142.7 | 142.7 | 187.7 | 187.7 | 232.7 | 232.7 |
| Width | 88 | 88 | 88 | 88 | 88 | 88 |
| Height | 94.2 | 94.2 | 94.2 | 94.2 | 94.2 | 94.2 |
| Number Of Refrigerant Circuits | 2 | 2 | 2 | 2 | 2 | 2 |
| **REFRIGERANT CHARGE, OPERATING** | | | | | | |
| R-410A, CKT1/CKT2, LBS | 59/55 | 45/65 | 75/71 | 83/73 | 90/82 | 94/92 |
| Oil Charge, CKT1/CKT2, Gallons | 2.76/ 2.76 | 3.28/ 3.33 | 3.33/ 3.33 | 4.99/ 2.73 | 4.99/ 3.33 | 4.99/ 4.99 |
| Shipping Weight | 4718 | 4953 | 5869 | 6259 | 7344 | 7882 |
| Operating Weight | 4791 | 5026 | 5942 | 6369 | 7428 | 8001 |
| **COMPRESSORS, SCROLL TYPE** | | | | | | |
| Compressors Per Circuit | 2/2 | 3/2 | 2/2 | 3/3 | 3/2 | 3/3 |
| Compressors Per Unit | 4 | 5 | 4 | 6 | 5 | 6 |
| **NOMINAL TONS PER COMPRESSOR** | | | | | | |
| Circuit 1 | 15/32 | 15 | 32 | 32 | 32 | 32 |
| Circuit 2 | 15/32 | 32 | 32 | 15 | 32 | 32 |
| Condenser | | | | | | |
| Total Face Area $Ft^2$ | 160.3 | 160.3 | 213.8 | 213.8 | 267.2 | 267.2 |
| Number Of Rows | 1 | 1 | 1 | 1 | 1 | 1 |
| Fins Per Inch | 20 | 20 | 20 | 20 | 20 | 20 |
| **CONDENSER FANS, LOW SOUND** | | | | | | |
| Number Of Fans, CKT 1/CKT 2 | 3/3 | 4/2 | 4/4 | 5/3 | 6/4 | 5/5 |
| Fan HP | 2 | 2 | 2 | 2 | 2 | 2 |
| Fan RPM | 1160 | 1160 | 1160 | 1160 | 1160 | 1160 |
| Total Chiller CFM | 93600 | 93600 | 124800 | 124800 | 156000 | 156000 |
| **EVAPORATOR** | | | | | | |
| Water Volume, Gallons | 8.8 | 8.8 | 8.8 | 13.2 | 10.0 | 14.3 |
| Maximum Water Side Pressure, PSIG | 150 | 150 | 150 | 150 | 150 | 150 |
| Maximum Refrigerant Side Pressure, PSIG | 450 | 450 | 450 | 450 | 450 | 450 |
| Minimum Chiller Water Flow Rate, GPM | 100 | 100 | 100 | 150 | 150 | 150 |
| Maximum Chiller Water Flow Rate, GPM | 385 | 385 | 385 | 625 | 625 | 625 |
| Water Connections Size, Inches | 3 | 3 | 3 | 3 | 3 | 3 |

**NOTES:**
1. kW = Compressor Input Power.
2. EER = Chiller EER (includes power from compressors, fans, and the control panels 0.8 kW).
3. Rated in accordance with AHRI Standard 550/590 at an air on condenser temperature of 95°F and a leaving chilled water temperature of 44°F.
4. Additional rating information can be provided by your local Johnson Controls Sales Office.

# ELECTRICAL DATA

**TABLE 6 -** MICROPANEL POWER SUPPLY

| UNIT VOLTAGE | UNIT VOLTAGE | CONTROL POWER | MCA NOTE A | OVER CURRENT PROTECTION, *SEE NOTE B* | | NF DISC SW |
|---|---|---|---|---|---|---|
| | | | | MIN | MAX | |
| MODELS W/O CONTROL TRANS | | 115-1-60/50 | 15A | 10A | 15A | 30 A / 240V |
| MODELS W/ CONTROL TRANS | -17 | 200-1-60 | 15A | 10A | 15A | 30 A / 240V |
| | -28 | 230-1-60 | 15A | 10A | 15A | 30 A / 240V |
| | -40 | 380-1-60 | 15A | 10A | 15A | 30 A / 480V |
| | -46 | 460-1-60 | 15A | 10A | 15A | 30 A / 480V |
| | -50 | 380/415-1-60 | 15A | 10A | 15A | 30A / 415V |
| | -58 | 575-1-60 | 15A | 10A | 15A | 30 A / 600V |

A. Minimum #14 AWG, 75 °C, Copper Recommended
B. Minimum and Maximum Over Current Protection, Dual Element Fuse or Circuit Breaker

WARNING

***It is possible that multiple sources of power can be supplying the unit power panel. To prevent serious injury or death, the technician should verify that NO LETHAL VOLTAGES are present inside the panel AFTER disconnecting power, PRIOR to working on equipment.***

CAUTION

***The unit evaporator heater uses 120VAC. Disconnecting 120VAC power from the unit, at or below freezing temperatures, can result in damage to the evaporator and unit as a result of the chilled liquid freezing.***

### Voltage Limitations

The following voltage limitations are absolute and operation beyond these limitations may cause serious damage to the compressor.

**TABLE 7 -** VOLTAGE RANGE

| VOLTAGE RANGE | | | |
|---|---|---|---|
| VOLTAGE CODE | UNIT POWER | MIN. | MAX. |
| -17 | 200-208/3/60 | 180 | 220 |
| -28 | 230-3-60 | 207 | 253 |
| -40 | 380-3-60 | 342 | 440 |
| -46 | 460-3-60 | 414 | 506 |
| -50 | 380/415-3-50 | 342 | 440 |
| -58 | 575-3-60 | 517 | 633 |

## COMPRESSOR HEATERS

Compressor heaters are standard. ZP180 compressors utilize 70W heaters; ZP235, compressor use 120W heaters and ZP285 and ZP385 utilize 150W heaters. If power is OFF more than two hours, the crankcase heaters must be energized for 18 – 24 hours prior to restarting a compressor. This will assure that liquid slugging and oil dilution does not damage the compressors on start.

**TABLE 8 -** PUMP ELECTRICAL DATA (60 HZ)

| PUMP MODEL | HORSE POWER | RPM | PUMP ELECTRICAL DATA | | | | | | | | | |
|---|---|---|---|---|---|---|---|---|---|---|---|---|
| | | | 208-3-60HZ | | 230-3-60HZ | | 380-3-60HZ | | 460-3-60HZ | | 575-3-60HZ | |
| | | | FLA | LRA | FLA | LRA | FLA | LRA | FLA | LRA | FLA | LRA |
| A | 5 | 3600 | N/A | N/A | 12.0 | 92.0 | 7.1 | 55.5 | 6.0 | 46.0 | 4.8 | 36.8 |
| B | 7.5 | 3600 | N/A | N/A | 17.6 | 126.0 | 10.6 | 78.0 | 8.8 | 63.0 | 7.0 | 50.4 |
| C | 10 | 3600 | N/A | N/A | 23.6 | 162.0 | 14.3 | 102.0 | 14.0 | 81.0 | 9.4 | 64.8 |
| D | 15 | 3600 | N/A | N/A | 35.0 | 232.0 | 20.9 | 143.0 | 17.5 | 116.0 | 14.0 | 92.8 |
| E | 5 | 1800 | N/A | N/A | 13.0 | 92.0 | 7.9 | 55.5 | 6.5 | 46.0 | 5.2 | 36.8 |
| F | 15 | 3600 | N/A | N/A | 35.0 | 232.0 | 20.9 | 143.0 | 17.5 | 116.0 | 14.0 | 92.8 |
| G | 7.5 | 3600 | N/A | N/A | 17.6 | 126.0 | 10.6 | 78.0 | 8.8 | 63.0 | 7.0 | 50.4 |
| H | 10 | 3600 | N/A | N/A | 23.6 | 162.0 | 14.3 | 102.0 | 14.0 | 81.0 | 9.4 | 64.8 |
| I | 15 | 3600 | N/A | N/A | 35.0 | 232.0 | 20.9 | 143.0 | 17.5 | 116.0 | 14.0 | 92.8 |
| J | 5 | 1800 | N/A | N/A | 13.0 | 92.0 | 7.9 | 55.5 | 6.5 | 46.0 | 5.2 | 36.8 |
| K | 15 | 3600 | N/A | N/A | 35.0 | 232.0 | 20.9 | 143.0 | 17.5 | 116.0 | 14.0 | 92.8 |
| L | 20 | 3600 | N/A | N/A | 45.0 | 290.0 | 28.7 | 190.0 | 22.5 | 145.0 | 18.0 | 116.0 |
| M | 3 | 1800 | N/A | N/A | 8.0 | 64.0 | 4.7 | 38.0 | 4.0 | 32.0 | 3.2 | 25.6 |
| N | 7.5 | 3600 | N/A | N/A | 17.6 | 126.0 | 10.6 | 78.0 | 8.8 | 63.0 | 7.0 | 50.4 |
| O | 10 | 3600 | N/A | N/A | 23.6 | 162.0 | 14.3 | 102.0 | 14.0 | 81.0 | 9.4 | 64.8 |
| P | 15 | 3600 | N/A | N/A | 35.0 | 232.0 | 20.9 | 143.0 | 17.5 | 116.0 | 14.0 | 92.8 |
| R | 5 | 1800 | N/A | N/A | 13.0 | 92.0 | 7.9 | 55.5 | 6.5 | 46.0 | 5.2 | 36.8 |
| S | 10 | 1800 | N/A | N/A | 24.0 | 162.0 | 15.1 | 102.0 | 12.0 | 81.0 | 9.6 | 64.8 |
| T | 15 | 1800 | N/A | N/A | 36.4 | 232.0 | 22.0 | 143.0 | 18.2 | 116.0 | 14.6 | 92.8 |
| U | 7.5 | 1800 | N/A | N/A | 18.4 | 126.0 | 11.1 | 78.0 | 9.2 | 63.0 | 7.4 | 50.4 |
| V | 20 | 3600 | N/A | N/A | 45.0 | 290.0 | 28.7 | 190.0 | 22.5 | 145.0 | 18.0 | 116.0 |

**NOTE:**
Reference PIN 59 for Pump Model.
Use this table along with Table 9 Electrical Data without Pumps to determine electrical data of the unit plus the pump.

**TABLE 9 -** ELECTRICAL DATA WITHOUT PUMPS

| CHILLER MODEL | VOLTAGE CODE | MIN CKT. AMPS | MIN N/F DISC SW | MIN DUAL ELEM FUSE & MIN CB | MAX DUAL ELEM FUSE MAX CB |
|---|---|---|---|---|---|
| YLAA0070 | 208 | 351 | 400 | 400 | 400 |
| | 230 | 350 | 400 | 400 | 400 |
| | 380 | 193 | 250 | 200 | 200 |
| | 460 | 160 | 200 | 175 | 175 |
| | 575 | 136 | 200 | 150 | 150 |
| YLAA0080 | 208 | 366 | 600 | 400 | 400 |
| | 230 | 365 | 600 | 400 | 400 |
| | 380 | 219 | 250 | 250 | 250 |
| | 460 | 173 | 200 | 175 | 175 |
| | 575 | 148 | 200 | 150 | 150 |
| YLAA0090 | 208 | 391 | 600 | 450 | 500 |
| | 230 | 390 | 600 | 450 | 450 |
| | 380 | 249 | 400 | 300 | 300 |
| | 460 | 192 | 250 | 225 | 225 |
| | 575 | 168 | 200 | 200 | 200 |
| YLAA0091 | 208 | 404 | 600 | 450 | 500 |
| | 230 | 403 | 600 | 450 | 500 |
| | 380 | 255 | 400 | 300 | 300 |
| | 460 | 200 | 250 | 225 | 250 |
| | 575 | 176 | 200 | 200 | 225 |
| YLAA0100 | 208 | 452 | 600 | 500 | 500 |
| | 230 | 451 | 600 | 500 | 500 |
| | 380 | 286 | 400 | 350 | 350 |
| | 460 | 223 | 250 | 250 | 250 |
| | 575 | 197 | 250 | 225 | 225 |
| YLAA0101 | 208 | 460 | 600 | 500 | 500 |
| | 230 | 458 | 600 | 500 | 500 |
| | 380 | 291 | 400 | 350 | 350 |
| | 460 | 227 | 250 | 250 | 250 |
| | 575 | 200 | 250 | 225 | 225 |
| YLAA0115 YLAA0120 | 208 | 511 | 600 | 600 | 600 |
| | 230 | 510 | 600 | 600 | 600 |
| | 380 | 321 | 400 | 350 | 350 |
| | 460 | 256 | 400 | 300 | 300 |
| | 575 | 227 | 250 | 250 | 250 |
| YLAA0125 | 208 | 512 | 600 | 600 | 600 |
| | 230 | 511 | 600 | 600 | 600 |
| | 380 | 309 | 400 | 350 | 350 |
| | 460 | 258 | 400 | 300 | 300 |
| | 575 | 204 | 250 | 225 | 225 |
| YLAA0136 | 208 | 579 | 800 | 600 | 600 |
| | 230 | 577 | 800 | 600 | 600 |
| | 380 | 338 | 400 | 400 | 400 |
| | 460 | 285 | 400 | 300 | 300 |
| | 575 | 226 | 250 | 250 | 250 |
| YLAA0142 | 208 | 579 | 800 | 600 | 600 |
| | 230 | 577 | 800 | 600 | 600 |
| | 380 | 338 | 400 | 400 | 400 |
| | 460 | 285 | 400 | 300 | 300 |
| | 575 | 226 | 250 | 250 | 250 |

**TABLE 9 -** ELECTRICAL DATA WITHOUT PUMPS

| | SYSTEM # 1 | | | | | | | | | SYSTEM # 2 | | | | | | | | |
|---|---|---|---|---|---|---|---|---|---|---|---|---|---|---|---|---|---|---|
| | COMPR 1 | | COMPR 2 | | COMPR 3 | | STD FLOW FANS | | | COMPR 1 | | COMPR 2 | | COMPR 3 | | STD FLOW FANS | | |
| | RLA | LRA | RLA | LRA | RLA | LRA | QTY | FLA | LRA | RLA | LRA | RLA | LRA | RLA | LRA | QTY | FLA | LRA |
| | 51.3 | 300 | 51.3 | 300 | 51.3 | 300 | 2 | 7.6 | 44 | 51.3 | 300 | 51.3 | 300 | 51.3 | 300 | 2 | 7.6 | 44 |
| | 51.3 | 300 | 51.3 | 300 | 51.3 | 300 | 2 | 7.4 | 37 | 51.3 | 300 | 51.3 | 300 | 51.3 | 300 | 2 | 7.4 | 37 |
| | 28 | 139 | 28 | 139 | 28 | 139 | 2 | 4.5 | 23.1 | 28 | 139 | 28 | 139 | 28 | 139 | 2 | 4.5 | 23.1 |
| | 23.1 | 150 | 23.1 | 150 | 23.1 | 150 | 2 | 4 | 19 | 23.1 | 150 | 23.1 | 150 | 23.1 | 150 | 2 | 4 | 19 |
| | 19.9 | 109 | 19.9 | 109 | 19.9 | 109 | 2 | 2.9 | 15.3 | 19.9 | 109 | 19.9 | 109 | 19.9 | 109 | 2 | 2.9 | 15.3 |
| | 55.8 | 425 | 55.8 | 425 | 55.8 | 425 | 2 | 7.6 | 44 | 51.3 | 300 | 51.3 | 300 | 51.3 | 300 | 2 | 7.6 | 44 |
| | 55.8 | 425 | 55.8 | 425 | 55.8 | 425 | 2 | 7.4 | 37 | 51.3 | 300 | 51.3 | 300 | 51.3 | 300 | 2 | 7.4 | 37 |
| | 36 | 239 | 36 | 239 | 36 | 239 | 2 | 4.5 | 23.1 | 28 | 139 | 28 | 139 | 28 | 139 | 2 | 4.5 | 23.1 |
| | 26.9 | 187 | 26.9 | 187 | 26.9 | 187 | 2 | 4 | 19 | 23.1 | 150 | 23.1 | 150 | 23.1 | 150 | 2 | 4 | 19 |
| | 23.7 | 148 | 23.7 | 148 | 23.7 | 148 | 2 | 2.9 | 15.3 | 19.9 | 109 | 19.9 | 109 | 19.9 | 109 | 2 | 2.9 | 15.3 |
| | 55.8 | 425 | 55.8 | 425 | 55.8 | 425 | 2 | 7.6 | 44 | 109.6 | 599 | 55.8 | 425 | | | 2 | 7.6 | 44 |
| | 55.8 | 425 | 55.8 | 425 | 55.8 | 425 | 2 | 7.4 | 37 | 109.6 | 599 | 55.8 | 425 | | | 2 | 7.4 | 37 |
| | 36 | 239 | 36 | 239 | 36 | 239 | 2 | 4.5 | 23.1 | 69.2 | 358 | 36 | 239 | | | 2 | 4.5 | 23.1 |
| | 26.9 | 187 | 26.9 | 187 | 26.9 | 187 | 2 | 4 | 19 | 54.5 | 310 | 26.9 | 187 | | | 2 | 4 | 19 |
| | 23.7 | 148 | 23.7 | 148 | 23.7 | 148 | 2 | 2.9 | 15.3 | 49.4 | 239 | 23.7 | 148 | | | 2 | 2.9 | 15.3 |
| | 109.6 | 599 | 55.8 | 425 | | | 3 | 7.6 | 44 | 109.6 | 599 | 55.8 | 425 | | | 3 | 7.6 | 44 |
| | 109.6 | 599 | 55.8 | 425 | | | 3 | 7.4 | 37 | 109.6 | 599 | 55.8 | 425 | | | 3 | 7.4 | 37 |
| | 69.2 | 358 | 36 | 239 | | | 3 | 4.5 | 23.1 | 69.2 | 358 | 36 | 239 | | | 3 | 4.5 | 23.1 |
| | 54.5 | 310 | 26.9 | 187 | | | 3 | 4 | 19 | 54.5 | 310 | 26.9 | 187 | | | 3 | 4 | 19 |
| | 49.4 | 239 | 23.7 | 148 | | | 3 | 2.9 | 15.3 | 49.4 | 239 | 23.7 | 148 | | | 3 | 2.9 | 15.3 |
| | 55.8 | 425 | 55.8 | 425 | 55.8 | 425 | 2 | 7.6 | 44 | 109.6 | 599 | 109.6 | 599 | | | 3 | 7.6 | 44 |
| | 55.8 | 425 | 55.8 | 425 | 55.8 | 425 | 2 | 7.4 | 37 | 109.6 | 599 | 109.6 | 599 | | | 3 | 7.4 | 37 |
| | 36 | 239 | 36 | 239 | 36 | 239 | 2 | 4.5 | 23.1 | 69.2 | 358 | 69.2 | 358 | | | 3 | 4.5 | 23.1 |
| | 26.9 | 187 | 26.9 | 187 | 26.9 | 187 | 2 | 4 | 19 | 54.5 | 310 | 54.5 | 310 | | | 3 | 4 | 19 |
| | 23.7 | 148 | 23.7 | 148 | 23.7 | 148 | 2 | 2.9 | 15.3 | 49.4 | 239 | 49.4 | 239 | | | 3 | 2.9 | 15.3 |
| | 55.8 | 425 | 55.8 | 425 | 55.8 | 425 | 2 | 7.6 | 44 | 109.6 | 599 | 109.6 | 599 | | | 4 | 7.6 | 44 |
| | 55.8 | 425 | 55.8 | 425 | 55.8 | 425 | 2 | 7.4 | 37 | 109.6 | 599 | 109.6 | 599 | | | 4 | 7.4 | 37 |
| | 36 | 239 | 36 | 239 | 36 | 239 | 2 | 4.5 | 23.1 | 69.2 | 358 | 69.2 | 358 | | | 4 | 4.5 | 23.1 |
| | 26.9 | 187 | 26.9 | 187 | 26.9 | 187 | 2 | 4 | 19 | 54.5 | 310 | 54.5 | 310 | | | 4 | 4 | 19 |
| | 23.7 | 148 | 23.7 | 148 | 23.7 | 148 | 2 | 2.9 | 15.3 | 49.4 | 239 | 49.4 | 239 | | | 4 | 2.9 | 15.3 |
| | 109.6 | 599 | 109.6 | 599 | | | 3 | 7.6 | 44 | 109.6 | 599 | 109.6 | 599 | | | 3 | 7.6 | 44 |
| | 109.6 | 599 | 109.6 | 599 | | | 3 | 7.4 | 37 | 109.6 | 599 | 109.6 | 599 | | | 3 | 7.4 | 37 |
| | 69.2 | 358 | 69.2 | 358 | | | 3 | 4.5 | 23.1 | 69.2 | 358 | 69.2 | 358 | | | 3 | 4.5 | 23.1 |
| | 54.5 | 310 | 54.5 | 310 | | | 3 | 4 | 19 | 54.5 | 310 | 54.5 | 310 | | | 3 | 4 | 19 |
| | 49.4 | 239 | 49.4 | 239 | | | 3 | 2.9 | 15.3 | 49.4 | 239 | 49.4 | 239 | | | 3 | 2.9 | 15.3 |
| | 106.2 | 523 | 106.2 | 523 | | | 4 | 7.6 | 44 | 106.2 | 523 | 106.2 | 523 | | | 4 | 7.6 | 44 |
| | 106.2 | 578 | 106.2 | 578 | | | 4 | 7.4 | 37 | 106.2 | 578 | 106.2 | 578 | | | 4 | 7.4 | 37 |
| | 64.3 | 355 | 64.3 | 355 | | | 4 | 4.5 | 23.1 | 64.3 | 355 | 64.3 | 355 | | | 4 | 4.5 | 23.1 |
| | 53.1 | 290 | 53.1 | 290 | | | 4 | 4 | 19 | 53.1 | 290 | 53.1 | 290 | | | 4 | 4 | 19 |
| | 42.5 | 255 | 42.5 | 255 | | | 4 | 2.9 | 15.3 | 42.5 | 255 | 42.5 | 255 | | | 4 | 2.9 | 15.3 |
| | 106.2 | 523 | 106.2 | 523 | 106.2 | 523 | 4 | 7.6 | 44 | 57.7 | 284 | 57.7 | 284 | 57.7 | 284 | 4 | 7.6 | 44 |
| | 106.2 | 578 | 106.2 | 578 | 106.2 | 578 | 4 | 7.4 | 37 | 57.7 | 330 | 57.7 | 330 | 57.7 | 330 | 4 | 7.4 | 37 |
| | 64.3 | 355 | 64.3 | 355 | 64.3 | 355 | 4 | 4.5 | 23.1 | 30.9 | 192 | 30.9 | 192 | 30.9 | 192 | 4 | 4.5 | 23.1 |
| | 53.1 | 290 | 53.1 | 290 | 53.1 | 290 | 4 | 4 | 19 | 26.9 | 180 | 26.9 | 180 | 26.9 | 180 | 4 | 4 | 19 |
| | 42.5 | 255 | 42.5 | 255 | 42.5 | 255 | 4 | 2.9 | 15.3 | 21.5 | 132 | 21.5 | 132 | 21.5 | 132 | 4 | 2.9 | 15.3 |
| | 106.2 | 523 | 106.2 | 523 | 106.2 | 523 | 5 | 7.6 | 44 | 57.7 | 284 | 57.7 | 284 | 57.7 | 284 | 3 | 7.6 | 44 |
| | 106.2 | 578 | 106.2 | 578 | 106.2 | 578 | 5 | 7.4 | 37 | 57.7 | 330 | 57.7 | 330 | 57.7 | 330 | 3 | 7.4 | 37 |
| | 64.3 | 355 | 64.3 | 355 | 64.3 | 355 | 5 | 4.5 | 23.1 | 30.9 | 192 | 30.9 | 192 | 30.9 | 192 | 3 | 4.5 | 23.1 |
| | 53.1 | 290 | 53.1 | 290 | 53.1 | 290 | 5 | 4 | 19 | 26.9 | 180 | 26.9 | 180 | 26.9 | 180 | 3 | 4 | 19 |
| | 42.5 | 255 | 42.5 | 255 | 42.5 | 255 | 5 | 2.9 | 15.3 | 21.5 | 132 | 21.5 | 132 | 21.5 | 132 | 3 | 2.9 | 15.3 |

**TABLE 9 -** ELECTRICAL DATA WITHOUT PUMPS

| CHILLER MODEL | VOLTAGE CODE | MIN CKT. AMPS | MIN N/F DISC SW | MIN DUAL ELEM FUSE & MIN CB | MAX DUAL ELEM FUSE MAX CB |
|---|---|---|---|---|---|
| YLAA0155 | 208 | 618 | 800 | 700 | 700 |
| | 230 | 617 | 800 | 700 | 700 |
| | 380 | 374 | 400 | 400 | 400 |
| | 460 | 311 | 400 | 350 | 350 |
| | 575 | 246 | 400 | 300 | 300 |
| YLAA0156 | 208 | 634 | 800 | 700 | 700 |
| | 230 | 632 | 800 | 700 | 700 |
| | 380 | 383 | 400 | 400 | 400 |
| | 460 | 319 | 400 | 350 | 350 |
| | 575 | 252 | 400 | 300 | 300 |
| YLAA0170 | 208 | 740 | 800 | 800 | 800 |
| | 230 | 738 | 800 | 800 | 800 |
| | 380 | 447 | 600 | 500 | 500 |
| | 460 | 372 | 400 | 400 | 400 |
| | 575 | 295 | 400 | 350 | 350 |
| YLAA0175 | 208 | 740 | 800 | 800 | 800 |
| | 230 | 738 | 800 | 800 | 800 |
| | 380 | 447 | 600 | 500 | 500 |
| | 460 | 372 | 400 | 400 | 400 |
| | 575 | 295 | 400 | 350 | 350 |

**NOTE:**
- Reference PIN 59 for Pump Model.
- Use this table along with Table 8 Pump Electrical Data to determine electrical data of the unit plus the pump.
- Does not include control transformer.

**TABLE 10 -** TRANSFORMER LOAD

| | VA | |
|---|---|---|
| **VOLT** | **2000** | **3000** |
| **208** | 9.6 | 14.4 |
| **230** | 8.7 | 13.0 |
| **380** | 5.3 | 7.9 |
| **460** | 4.3 | 6.5 |
| **575** | 3.5 | 5.2 |

**TABLE 9 -** ELECTRICAL DATA WITHOUT PUMPS

| SYSTEM # 1 | | | | | | | | | SYSTEM # 2 | | | | | | | | |
|---|---|---|---|---|---|---|---|---|---|---|---|---|---|---|---|---|---|
| COMPR 1 | | COMPR 2 | | COMPR 3 | | STD FLOW FANS | | | COMPR 1 | | COMPR 2 | | COMPR 3 | | STD FLOW FANS | | |
| RLA | LRA | RLA | LRA | RLA | LRA | QTY | FLA | LRA | RLA | LRA | RLA | LRA | RLA | LRA | QTY | FLA | LRA |
| 106.2 | 523 | 106.2 | 523 | 106.2 | 523 | 4 | 7.6 | 44 | 106.2 | 523 | 106.2 | 523 | | | 4 | 7.6 | 44 |
| 106.2 | 578 | 106.2 | 578 | 106.2 | 578 | 4 | 7.4 | 37 | 106.2 | 578 | 106.2 | 578 | | | 4 | 7.4 | 37 |
| 64.3 | 355 | 64.3 | 355 | 64.3 | 355 | 4 | 4.5 | 23.1 | 64.3 | 355 | 64.3 | 355 | | | 4 | 4.5 | 23.1 |
| 53.1 | 290 | 53.1 | 290 | 53.1 | 290 | 4 | 4 | 19 | 53.1 | 290 | 53.1 | 290 | | | 4 | 4 | 19 |
| 42.5 | 255 | 42.5 | 255 | 42.5 | 255 | 4 | 2.9 | 15.3 | 42.5 | 255 | 42.5 | 255 | | | 4 | 2.9 | 15.3 |
| 106.2 | 523 | 106.2 | 523 | 106.2 | 523 | 6 | 7.6 | 44 | 106.2 | 523 | 106.2 | 523 | | | 4 | 7.6 | 44 |
| 106.2 | 578 | 106.2 | 578 | 106.2 | 578 | 6 | 7.4 | 37 | 106.2 | 578 | 106.2 | 578 | | | 4 | 7.4 | 37 |
| 64.3 | 355 | 64.3 | 355 | 64.3 | 355 | 6 | 4.5 | 23.1 | 64.3 | 355 | 64.3 | 355 | | | 4 | 4.5 | 23.1 |
| 53.1 | 290 | 53.1 | 290 | 53.1 | 290 | 6 | 4 | 19 | 53.1 | 290 | 53.1 | 290 | | | 4 | 4 | 19 |
| 42.5 | 255 | 42.5 | 255 | 42.5 | 255 | 6 | 2.9 | 15.3 | 42.5 | 255 | 42.5 | 255 | | | 4 | 2.9 | 15.3 |
| 106.2 | 523 | 106.2 | 523 | 106.2 | 523 | 5 | 7.6 | 44 | 106.2 | 523 | 106.2 | 523 | 106.2 | 523 | 5 | 7.6 | 44 |
| 106.2 | 578 | 106.2 | 578 | 106.2 | 578 | 5 | 7.4 | 37 | 106.2 | 578 | 106.2 | 578 | 106.2 | 578 | 5 | 7.4 | 37 |
| 64.3 | 355 | 64.3 | 355 | 64.3 | 355 | 5 | 4.5 | 23.1 | 64.3 | 355 | 64.3 | 355 | 64.3 | 355 | 5 | 4.5 | 23.1 |
| 53.1 | 290 | 53.1 | 290 | 53.1 | 290 | 5 | 4 | 19 | 53.1 | 290 | 53.1 | 290 | 53.1 | 290 | 5 | 4 | 19 |
| 42.5 | 255 | 42.5 | 255 | 42.5 | 255 | 5 | 2.9 | 15.3 | 42.5 | 255 | 42.5 | 255 | 42.5 | 255 | 5 | 2.9 | 15.3 |
| 106.2 | 523 | 106.2 | 523 | 106.2 | 523 | 5 | 7.6 | 44 | 106.2 | 523 | 106.2 | 523 | 106.2 | 523 | 5 | 7.6 | 44 |
| 106.2 | 578 | 106.2 | 578 | 106.2 | 578 | 5 | 7.4 | 37 | 106.2 | 578 | 106.2 | 578 | 106.2 | 578 | 5 | 7.4 | 37 |
| 64.3 | 355 | 64.3 | 355 | 64.3 | 355 | 5 | 4.5 | 23.1 | 64.3 | 355 | 64.3 | 355 | 64.3 | 355 | 5 | 4.5 | 23.1 |
| 53.1 | 290 | 53.1 | 290 | 53.1 | 290 | 5 | 4 | 19 | 53.1 | 290 | 53.1 | 290 | 53.1 | 290 | 5 | 4 | 19 |
| 42.5 | 255 | 42.5 | 255 | 42.5 | 255 | 5 | 2.9 | 15.3 | 42.5 | 255 | 42.5 | 255 | 42.5 | 255 | 5 | 2.9 | 15.3 |

**TABLE 11 -** WIRING LUGS

| CHILLER MODEL | VOLTS | 1 PT SUPPLY T. BLOCK | MOLDED CASE SWITCH 1 PT. SUPPLY | | MOLDED CASE CIRCUIT BREAKER 1 PT. SUPPLY | |
|---|---|---|---|---|---|---|
| | | INSTALLED LUG | INSTALLED LUG | ALTERNATE LUG | INSTALLED LUG | ALTERNATE LUG |
| YLAA0070 | 208 | (2) # 6 - 500 | (2) 250 - 500 | (3) 2/0 - 400 | (2) 3/0 - 250 | (1) 250 - 500 |
| | 230 | (2) # 6 - 500 | (2) 250 - 500 | (3) 2/0 - 400 | (2) 3/0 - 250 | (1) 250 - 500 |
| | 380 | (1) # 4 - 500 | (1) 6 - 350 | - | (1) 6 - 350 | - |
| | 460 | (1) # 4 - 500 | (1) 6 - 350 | - | (1) 6 - 350 | - |
| | 575 | (1) # 4 - 500 | (1) 6 - 350 | - | (1) 6 - 350 | - |
| YLAA0080 | 208 | (2) # 6 - 500 | (2) 250 - 500 | (3) 2/0 - 400 | (2) 3/0 - 250 | (1) 250 - 500 |
| | 230 | (2) # 6 - 500 | (2) 250 - 500 | (3) 2/0 - 400 | (2) 3/0 - 250 | (1) 250 - 500 |
| | 380 | (1) # 4 - 500 | (2) 3/0 - 250 | (1) 250 - 500 | (1) 6 - 350 | - |
| | 460 | (1) # 4 - 500 | (1) 6 - 350 | - | (1) 6 - 350 | - |
| | 575 | (1) # 4 - 500 | (1) 6 - 350 | - | (1) 6 - 350 | - |
| YLAA0090 | 208 | (2) # 6 - 500 | (2) 250 - 500 | (3) 2/0 - 400 | (2) 250 - 500 | (3) 2/0 - 400 |
| | 230 | (2) # 6 - 500 | (2) 250 - 500 | (3) 2/0 - 400 | (2) 250 - 500 | (3) 2/0 - 400 |
| | 380 | (1) # 4 - 500 | (2) 3/0 - 250 | (1) 250 - 500 | (2) 3/0 - 250 | (1) 250 - 500 |
| | 460 | (1) # 4 - 500 | (1) 6 - 350 | - | (1) 6 - 350 | - |
| | 575 | (1) # 4 - 500 | (1) 6 - 350 | - | (1) 6 - 350 | - |
| YLAA0091 | 208 | (2) # 6 - 500 | (2) 250 - 500 | (3) 2/0 - 400 | (2) 250 - 500 | (3) 2/0 - 400 |
| | 230 | (2) # 6 - 500 | (2) 250 - 500 | (3) 2/0 - 400 | (2) 250 - 500 | (3) 2/0 - 400 |
| | 380 | (1) # 4 - 500 | (2) 3/0 - 250 | (1) 250 - 500 | (2) 3/0 - 250 | (1) 250 - 500 |
| | 460 | (1) # 4 - 500 | (1) 6 - 350 | - | (1) 6 - 350 | - |
| | 575 | (1) # 4 - 500 | (1) 6 - 350 | - | (1) 6 - 350 | - |
| YLAA0100 YLAA0101 | 208 | (2) # 6 - 500 | (2) 250 - 500 | (3) 2/0 - 400 | (2) 250 - 500 | (3) 2/0 - 400 |
| | 230 | (2) # 6 - 500 | (2) 250 - 500 | (3) 2/0 - 400 | (2) 250 - 500 | (3) 2/0 - 400 |
| | 380 | (1) # 4 - 500 | (2) 3/0 - 250 | (1) 250 - 500 | (2) 3/0 - 250 | (1) 250 - 500 |
| | 460 | (1) # 4 - 500 | (2) 3/0 - 250 | (1) 250 - 500 | (2) 3/0 - 250 | (1) 250 - 500 |
| | 575 | (1) # 4 - 500 | (1) 6 - 350 | - | (1) 6 - 350 | - |
| YLAA0115 YLAA0120 YLAA0125 | 208 | (2) # 6 - 500 | (3) 2/0 - 400 | (2) 250 - 500 | (3) 2/0 - 400 | (2) 250 - 500 |
| | 230 | (2) # 6 - 500 | (3) 2/0 - 400 | (2) 250 - 500 | (3) 2/0 - 400 | (2) 250 - 500 |
| | 380 | (1) # 4 - 500 | (2) 3/0 - 250 | (1) 250 - 500 | (2) 3/0 - 250 | (1) 250 - 500 |
| | 400/460 | (1) # 4 - 500 | (2) 3/0 - 250 | (1) 250 - 500 | (2) 3/0 - 250 | (1) 250 - 500 |
| | 575 | (1) # 4 - 500 | (2) 3/0 - 250 | (1) 250 - 500 | (2) 3/0 - 250 | (1) 250 - 500 |
| YLAA0136 YLAA0142 | 208 | (2) # 6 - 500 | (2) 250 - 500 | (3) 2/0 - 400 | (2) 250 - 500 | (3) 2/0 - 400 |
| | 230 | | | | | |
| | 380 | (2) # 6 - 500 | (3) 2/0 - 400 | (2) 250 - 500 | (2) 3/0 - 250 | (1) 250 - 500 |
| | 400/460 | (1) # 4 - 500 | (1) 250 - 500 | (2) 3/0 - 250 | (1) 250 - 500 | (2) 3/0 - 250 |
| | 575 | (1) # 4 - 500 | (1) 250 - 500 | (2) 3/0 - 250 | (1) 250 - 500 | (2) 3/0 - 250 |
| YLAA0155 YLAA0156 | 208 | (3) 2/0 - 400 | (3) 2/0 - 400 | (2) 250 - 500 | (3) 2/0 - 400 | (2) 250 - 500 |
| | 230 | (3) 2/0 - 400 | (3) 2/0 - 400 | (2) 250 - 500 | (3) 2/0 - 400 | (2) 250 - 500 |
| | 380 | (2) # 6 - 500 | (2) 250 - 500 | (3) 2/0 - 400 | (2) 250 - 500 | (3) 2/0 - 400 |
| | 400/460 | (2) # 6 - 500 | (1) 250 - 500 | (2) 3/0 - 250 | (1) 250 - 500 | (2) 3/0 - 250 |
| | 575 | (1) # 4 - 500 | (2) 3/0 - 250 | (1) 250 - 500 | (2) 3/0 - 250 | (1) 250 - 500 |
| YLAA0170 YLAA0175 | 208 | (4) 4/0 - 500 | (4) 4/0 - 500 | - | (3) 2/0 - 400 | (2) 250 - 500 |
| | 230 | (4) 4/0 - 500 | (4) 4/0 - 500 | - | (3) 2/0 - 400 | (2) 250 - 500 |
| | 380 | (2) # 6 - 500 | (2) 250 - 500 | (3) 2/0 - 400 | (2) 250 - 500 | (3) 2/0 - 400 |
| | 460 | (2) # 6 - 500 | (2) 250 - 500 | (3) 2/0 - 400 | (2) 3/0 - 250 | (1) 250 - 500 |
| | 575 | (1) # 4 - 500 | (2) 3/0 - 250 | (1) 250 - 500 | (2) 3/0 - 250 | (1) 250 - 500 |

# ELECTRICAL NOTES

**NOTES**

1. Minimum Circuit Ampacity (MCA) is based on 125% of the rated load amps for the largest motor plus 100% of the rated load amps for all other loads included in the circuit, per N.E.C. Article 430-24. If the optional Factory Mounted Control Transformer is provided, add the following MCA values to the electrical tables for the system providing power to the transformer: -17, add 2.5 amps; -28, add 2.3 amps; -40, add 1.5 amps, -46, add 1.3 amps; -58, add 1 amps.
2. The minimum recommended disconnect switch is based on 115% of the rated load amps for all loads included in the circuit, per N.E.C. Article 440.
3. Minimum fuse size is based upon 150% of the rated load amps for the largest motor plus 100% of the rated load amps for all other loads included in the circuit to avoid nuisance trips at start-up due to lock rotor amps. It is not recommended in applications where brown outs, frequent starting and stopping of the unit, and/or operation at ambient temperatures in excess of 95ºF (35ºC) is anticipated.
4. Maximum fuse size is based upon 225% of the rated load amps for the largest motor plus 100% of the rated load amps for all other loads included in the circuit, per N.E.C. Article 440-22.
5. Circuit breakers must be UL listed and CSA certified and maximum size is based on 225% of the rated load amps for the largest motor plus 100% of the rated load amps for all other loads included in the circuit. Otherwise, HACR-type circuit breakers must be used. Maximum HACR circuit breaker rating is based on 225% of the rated load amps for the largest motor plus 100% of the rated load amps for all other loads included in the circuit.
6. The "INCOMING WIRE RANGE" is the minimum and maximum wire size that can be accommodated by the unit wiring lugs. The (2) preceding the wire range indicates the number of termination points available per phase of the wire range specified. Actual wire size and number of wires per phase must be determined based on the National Electrical Code, **using copper connectors only**. Field wiring must also comply with local codes.
7. A ground lug is provided for each compressor system to accommodate a field grounding conductor per N.E.C. Table 250-95. A control circuit grounding lug is also supplied.
8. The supplied disconnect is a "Disconnecting Means" as defined in the N.E.C. 100, and is intended for isolating the unit for the available power supply to perform maintenance and troubleshooting. This disconnect is not intended to be a Load Break Device.
9. Field Wiring by others which complies to the National Electrical Code and Local Codes.

5

**LEGEND**

| | |
|---|---|
| ACR-LINE | ACROSS THE LINE START |
| C.B. | CIRCUIT BREAKER |
| D.E. | DUAL ELEMENT FUSE |
| DISC SW | DISCONNECT SWITCH |
| FACT MOUNT CB | FACTORY MOUNTED CIRCUIT BREAKER |
| FLA | FULL LOAD AMPS |
| HZ | HERTZ |
| MAX | MAXIMUM |
| MCA | MINIMUM CIRCUIT AMPACITY |
| MIN | MINIMUM |
| MIN NF | MINIMUM NON FUSED |
| RLA | RATED LOAD AMPS |
| S.P. WIRE | SINGLE POINT WIRING |
| UNIT MTD SERV SW | UNIT MOUNTED SERVICE (NON-FUSED DISCONNECT |
| LRA | LOCKED ROTOR AMPS |

**VOLTAGE CODE**

-17 = 200-208-3-60
-28 = 230-3-60
-40 = 380-3-60
-46 = 460-3-60
-50 = 380/415-3-50
-58 = 575-3-60

# ELECTRICAL NOTES AND LEGEND

| DESIGNATION | DESCRIPTION |
|---|---|
| ACC | ACCESSORY |
| - ADIS | DISPLAY BOARD |
| - AMB | MICRO BOARD |
| - BAMB | AMBIENT |
| - BDAT | DISCHARGE AIR TEMPERATURE |
| - BDP | DISCHARGE PRESSURE |
| - BECT | ENTRING CHILLED TEMPERATURE |
| - BLCT | LEAVING CHILLED TEMPERATURE NOT FITTED ON REMOTE EVAP UNITS |
| -BMP | MOTOR PROTECTOR COMPRESSOR |
| - BSP | SUCTION PRESSURE |
| - CPF | CAPACITOR POWER FACTOR |
| - ECH | CRANKCASE HEATER |
| - EEH | EVAPORATOR HEATER |
| - EHRH | HEAT RECOVERY HEATER |
| - EPH | PUMP HEATER |
| - EXT | EXTERNAL TO CONTROL PANEL |
| - F | FUSE |
| - FHP | HIGH PRESSURE CUTOUT |
| - FSC | FAN SPEED CONTROLLER |
| - FSI | FAN SPEED INHIBIT TWO SPEED FAN OPTION ONLY |
| GND | GROUND |
| G/Y | GREEN / YELLOW |
| J | PLUG BOARD CONNECTOR |
| - K | CIRCUIT BOARD RELAY |
| - KF | FAN CONTACTOR LINE (INCLUDING COIL SUPPRESSOR) |
| - KFH | FAN CONTACTOR HIGH SPEED (INCLUDING COIL SUPPRESSOR) |
| - KFL | FAN CONTACTOR LOW SPEED (INCLUDING COIL SUPPRESSOR) |
| - KFOL | FAN OVERLOAD |
| - KFS | RELAY FAN SPEED |
| - KH | HEATER RELAY |
| - KM | COMPRESSOR CONTACTOR (INCLUDING COIL SUPPRESSOR) |
| - KCR | CONTROL RELAY |
| - KP | PUMP CONTACTOR PART (INCLUDING COIL SUPPRESSOR) |
| - KT | RELAY TIMER |
| - M | COMPRESSOR MOTOR |

| DESIGNATION | DESCRIPTION |
|---|---|
| - MF | MOTOR FAN |
| - MP | MOTOR PUMP |
| NU | NOT USED |
| PE | PROTECTIVE EARTH |
| PWM | PULSE WIDTH MODULATION TEMP RESET or REMOTE UNLOAD 2nd STEP |
| - QCB | CIRCUIT BREAKER |
| - QMMSC | MANUAL MOTOR STARTER COMPRESSOR |
| - QMMSP | MANUAL MOTOR STARTER PUMP |
| - QSD | SWITCH DISCONNECT |
| R | RESISTOR |
| RED | RED |
| RP | RUN PERMISSIVE |
| RU | REMOTE UNLOAD 1st STEP |
| SCH | THERMOSTAT CRANKCASE HEATER |
| SCR | SCREEN |
| - SF | FLOW SWITCH |
| - SKP | KEYPAD |
| - SOA | SWITCH OFF AUTO |
| - SZT | ZONE THERMOSTAT |
| - T | TRANSFORMER |
| - TC | TRANSFORMER CURRENT |
| - UBR | BRIGDE RECFIFIER |
| - WHT | WHITE |
| - XP | PLUGS BETWEEN POW./MICROBOARD. SECTION |
| - XTBC | TERMINAL BLOCK CUSTOMER |
| - XTBF | TERMINAL BLOCK FACTORY |
| - YESV | EVAPORATOR SOLENOID VALVE |
| - YHGSV | HOT GAS SOLENOID VALVE (INCLUDING COIL SUPPRESSOR) |
| - YLLSV | LIQUID LINE SOLENOID VALVE FIELD MOUNTED AND WIRED ON REMOTE EVAP. UNITS |
| - ZCPR | COMPRESSOR |
| NB | NOTE WELL {SEE NOTE} |
| — ◦ — ◦ — ◦ — ◦ | WIRING AND ITEMS SHOWN THUS ARE STANDARD YORK ACCESSORIES |
| — ◦◦ — ◦◦ — ◦◦ — ◦◦ | WIRING AND ITEMS SHOWN THUS ARE NOT SUPPLIED BY YORK |
| — — — | ITEMS THUS ENCLOSED FORM A COMPONENTS OR SETS OF COMPONENTS |

035-21966-101 REVG

# ELECTRICAL NOTES AND LEGEND (CONT'D)

035-21966-101 REV I

| | GENERAL |
|---|---|
| a. | This drawing is based on IEC symbols. |
| b. | Field wiring to be in accordance with the relevant electrical code as well as all other applicable codes and specifications. |
| c. | All sources of supply shown on this diagram to be taken from one main isolator, not shown or supplied by YORK. |
| d. | Green and yellow wire is used for earth, multi-colored cable used for low voltage. Red wire used for AC Control, blue wire for neutral, black wire for AC and DC power. Orange wire should be used for interlock control wiring supplied by external source. |
| e. | Legend designation depicts component abbreviations. Number prefix located, if applicable, on schematic circuit, refers to system thereon, E.G. = 1-FHP2 refers to high pressure cutout no 2 on system no 1. |
| f. | All wiring to control section voltage free contacts requires a supply provided by the customer maximum voltage 120 volts. The customer must take particular care when deriving the supplies for the voltage free terminals with regard to a common point of isolation. Thus, these circuits when used must be fed via the common point of isolation the voltage to these circuits is removed when the common point of isolation to the unit is opened. This common point of isolation is not supplied by YORK. The YORK voltage free contacts are rated at 100va. All inductive devices {relays} switch by the YORK voltage free contacts must have their coil suppressed using standard R/C suppressors. |
| g. | Customer voltage free contacts connected to terminal 13 must be rated at 30V 5ma. |
| h. | No controls {relays etc.} Should be mounted in any section of the control panel. Additionally, control wiring not connected to the YORK control panel should not be run through the panel. If these precautions are not followed, electrical noise could cause malfunctions or damage to the unit and its controls. |
| I. | ●——► 120/14.3 - (Signal IN/OUT) i.e. 120 is wire # and 14.3 refers to SHT. 14 column 3. |
| | **Notes** |
| 1 | Refer to installation commissioning operation and maintenance manual for customer connections and customer connection notes, non compliance to these instructions will invalidate unit warranty. |
| 2 | Wiring and components for compressor 3 only fitted when unit has 3 compressors on the system. 1-BMP3 is replaced by a link across terminals 134 & 135. 2-BMP3 is replaced by a link across terminals 234 & 235. |
| 3 | |
| 4 | Fitted on units with hot gas bypass option. |
| 5 | EMS option is wired as shown. |
| 6 | This wiring must be used for old display 031-0110-000. |
| 7 | Network connection point. |
| 8 | Printer port. |
| 9 | Remote emergency stop can be wired between terminal l and 5 after removing link. |
| 10 | Power factor correction accessory. Power factor correction fitted to each compressor contactor. |
| 11 | Not fitted on compressors with internal motor protection. For system 1 terminals 132 & 133, 133 & 134 and 134 & 135 are linked. For system 2 terminals 232 & 233, 233 & 234 and 234 & 235 are linked. |
| 12 | Only fitted on systems with 3 or 4 fans. |
| 13 | Only fitted on systems with 4 fans. |
| 14 | Only fitted on systems with 5 fans. |
| 15 | Only fitted on systems with 6 fans. |
| 16 | Input switch disconnect (standard on CE units) or circuit breaker option replaces input terminal block. |
| 17 | Input switch disconnect & individual system circuit breaker option replaces input terminal block. |
| 18 | 115V control circuit requires a 115V supply unless control circuit transformer -T2 & -F3 are fitted (standard on CE units). |
| 19 | For optional hydro kit. Heater -EPH is fitted and wired as shown. On single pump -KP1, -QMMSP1 & -MP1 are fitted & wired as shown. On two pump hydro kits -KP2, -QMMSP2 & -MP2 are also fitted and wired as shown. |
| 20 | Current measurement option wired as show. |
| 21 | Only fitted on systems with single speed fans. |
| 22 | Only fitted on systems with two speed fans. |
| 23 | Optional compressor manual motors starters (standard on CE units). |

# ELECTRICAL NOTES AND LEGEND (CONT'D)

| | |
|---|---|
| 24 | See sheet 3 of connection diagram for power input options. |
| 25 | Alternate connections shown for different two speed motor types. |
| 26 | Only fitted on systems with a maximum of 4 fans. |
| 27 | 220/230V units require a separate fuse for units w/4 or more fans per system. |
| 28 | Low ambient kit -FSC for fan -MF1 is only fitted on systems with less than 4 fans. |
| 29 | Only fitted on YLAA0091. |
| 30 | Only fitted on YLAA0090, 0091 & 0135. |
| 31 | Input dual point circuit breaker option replaces input terminal block. |
| 32 | Field installed on remote evaporator units. |
| 33 | Fitted on units with single phase motors only. |
| 34 | Fitted on units with low ambient option only. |
| 35 | Only fitted on units with an acoustic kit. |
| 36 | Only fitted on heat recovery units. |
| 37 | Only fitted on condensing units. |
| 38 | Omitted on condensing units. |
| 39 | Fitted on units with low ambient option using single phase motors (50hz only). |
| 40 | Fitted on units with high airflow fan option only. |
| 41 | Part of e-link kit option. |
| 42 | Part of temp. sensor kit (on condensing units only). |
| 43 | When the compressors motor protection (-bmp) includes phase reversal the extra -bmp terminals and three wires are fitted as shown in the compressor terminal box as detailed for 1-zcpr1 (copeland). |
| 44 | When the compressors motor protection (-bmp) includes phase reversal the extra -bmp terminals and three wires are fitted as shown in the compressor terminal box as detailed for bitzer. |

THIS PAGE INTENTIONALLY LEFT BLANK

# WIRING DIAGRAMS
# ELEMENTARY WIRING DIAGRAMS

035-21583-101 REV I

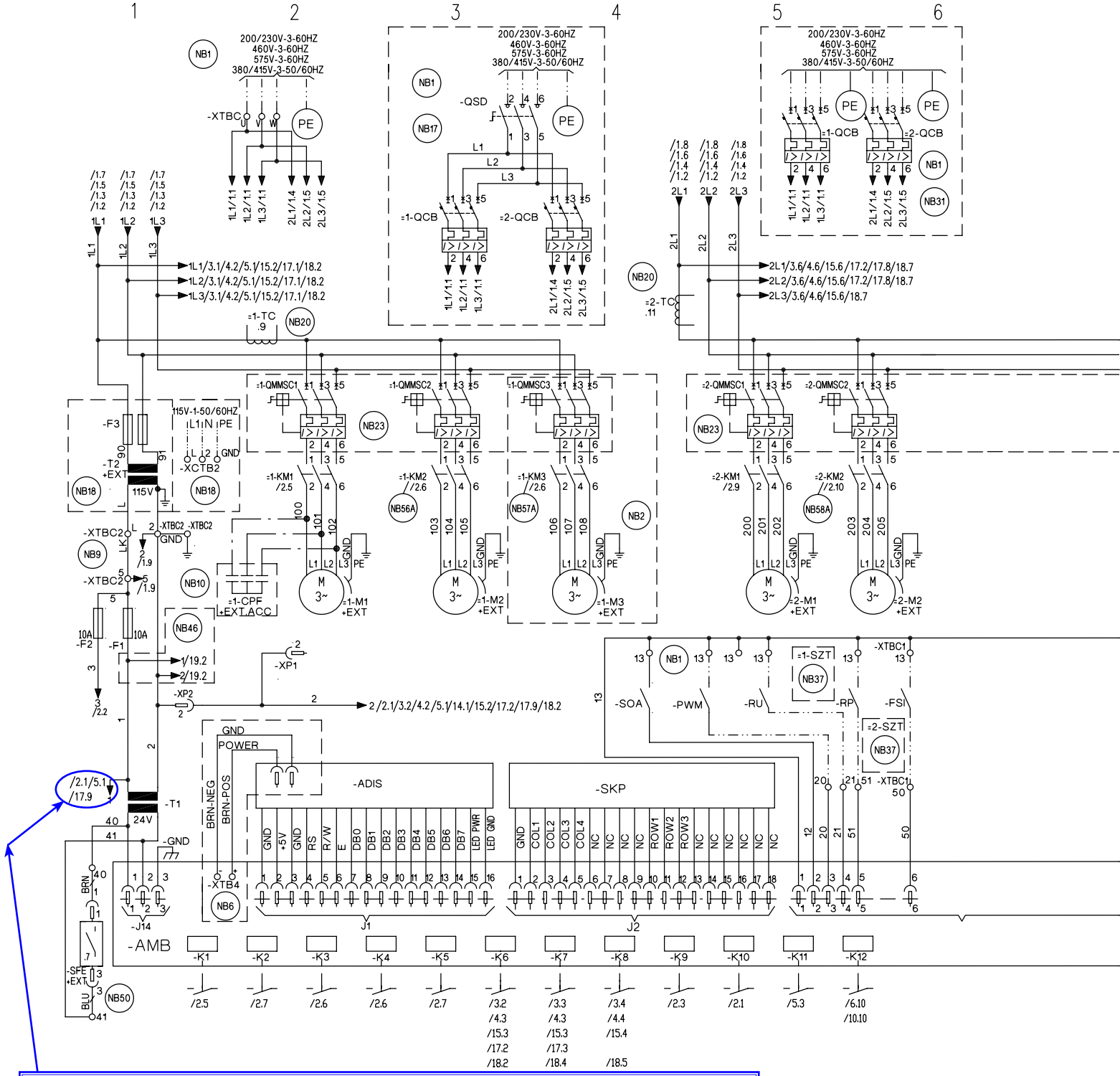


**1/2.1 What these numbers mean. Example:**
**1** = follow wire no.1
**2.** = is the DWG number on the bottom center of each page.
**.1** = is the locator number across the top of the page.
At the top of the pages the numbers **1** to **11** go from left to right. Find drawing number **2** and in column number **1** across the top of the page, locate wire number **1**.

**DWG. 1**

**FIGURE 11 -** ELEMENTARY WIRING DIAGRAM

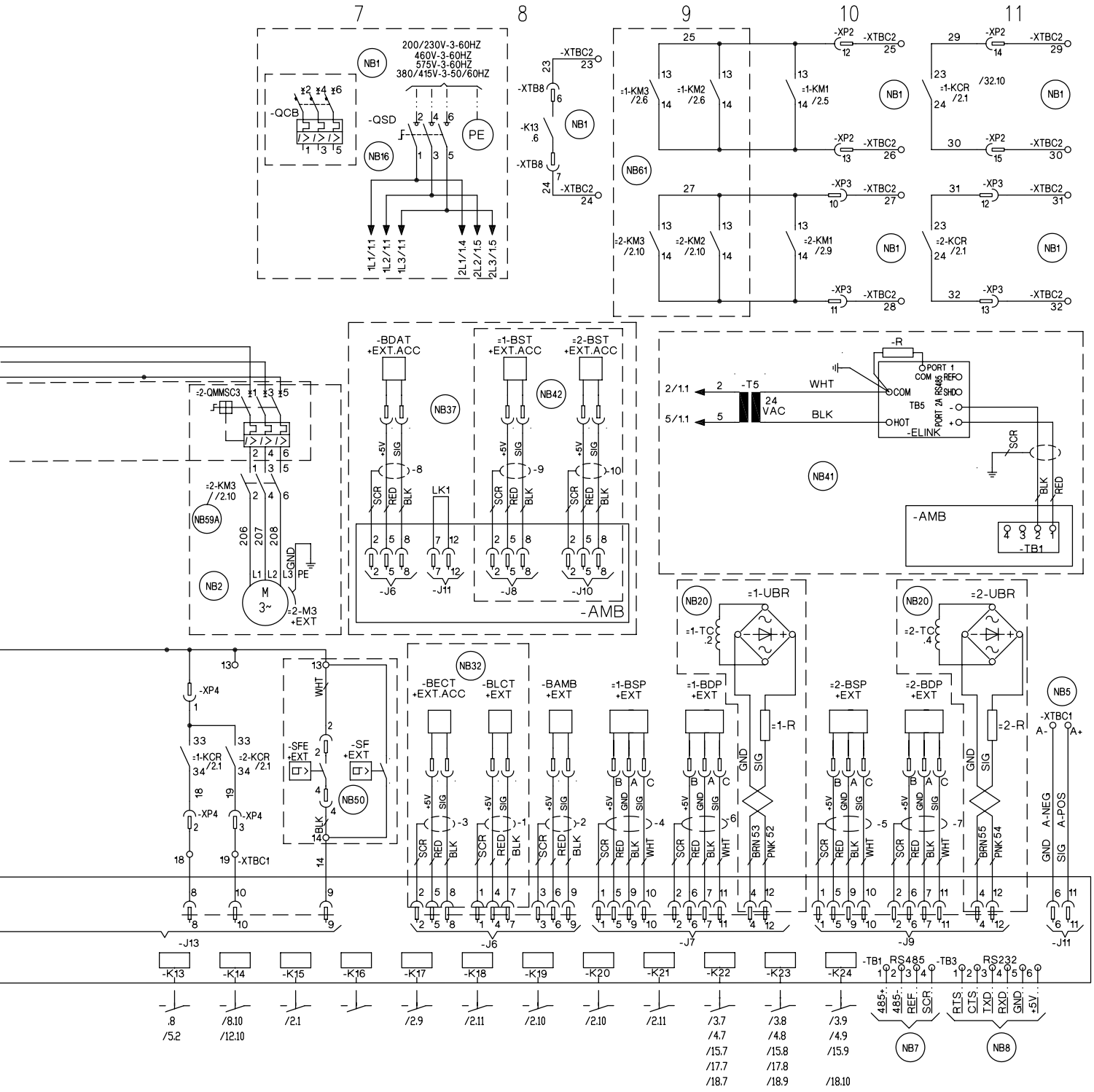


**DWG. 1**

**FIGURE 11** - ELEMENTARY WIRING DIAGRAM (CONT'D)

035-21583-102 REV J

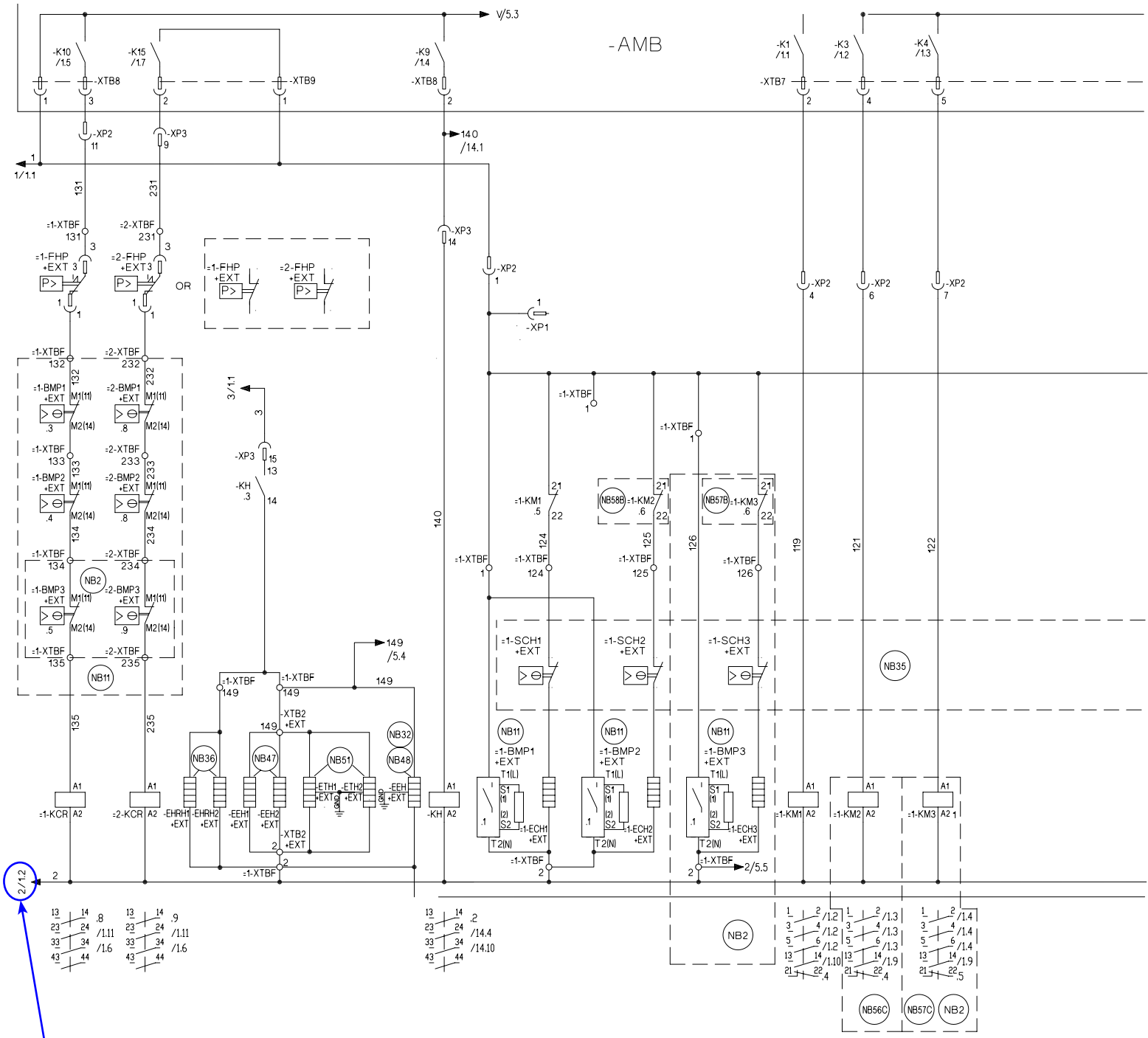


# DWG. 2

**1/2.1 What these numbers mean. Example:**
**1** = follow wire no.1
**2.** = is the DWG number on the bottom center of each page.
**.1** = is the locator number across the top of the page.
At the top of the pages the numbers **1** to **11** go from left to right. Find drawing number **2** and in column number **1** across the top of the page, locate wire number **1**.

LD16750a

**FIGURE 12 -** ELEMENTARY WIRING DIAGRAM

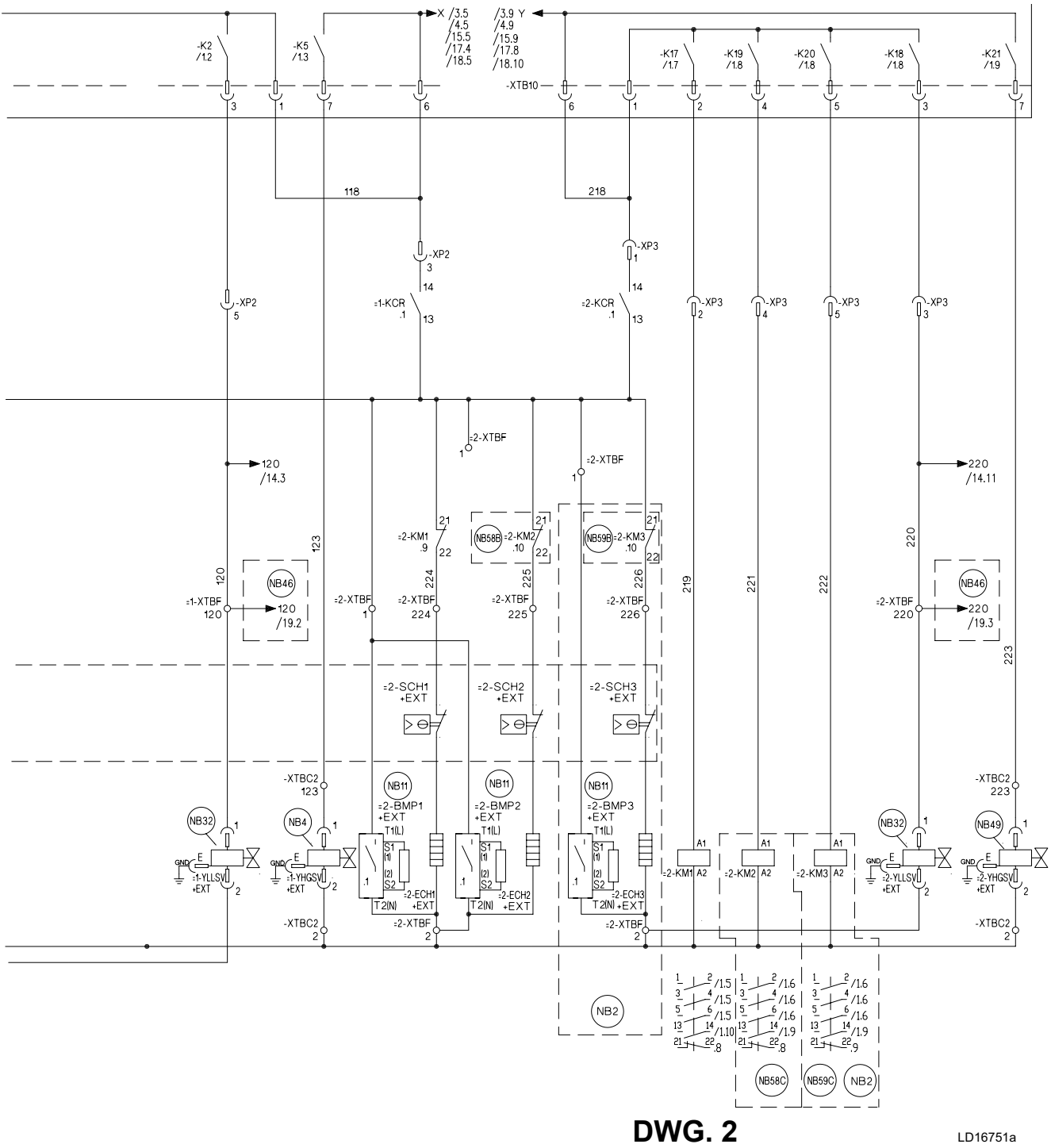


**DWG. 2**

LD16751a

**FIGURE 12** - ELEMENTARY WIRING DIAGRAM (CONT'D)

# FAN WIRING

035-21583-103 REV C

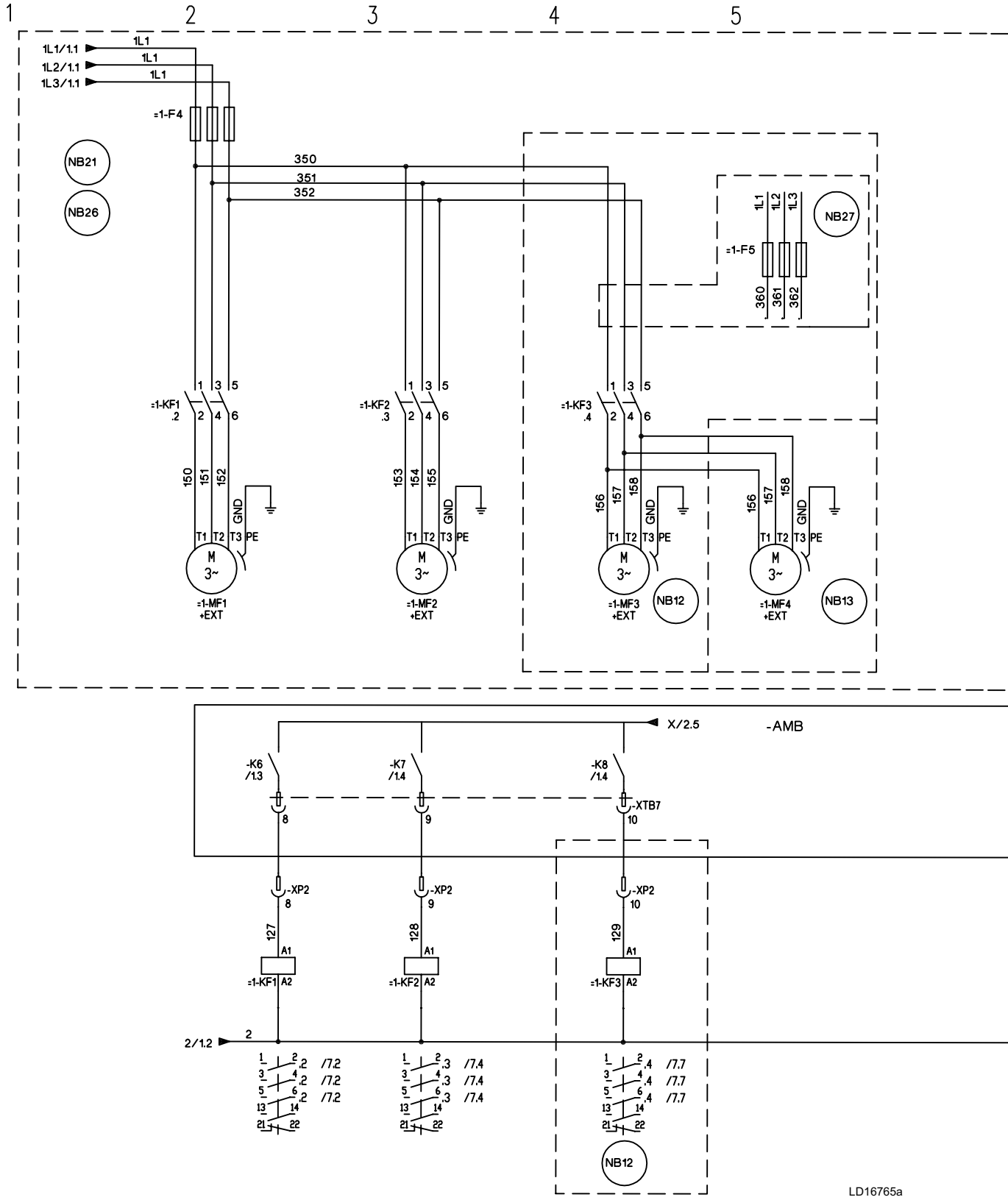


## DWG. 3

**FIGURE 13 -** FAN WIRING, STANDARD LOW SOUND OR ULTRA QUIET, YLAA0070 - YLAA0516

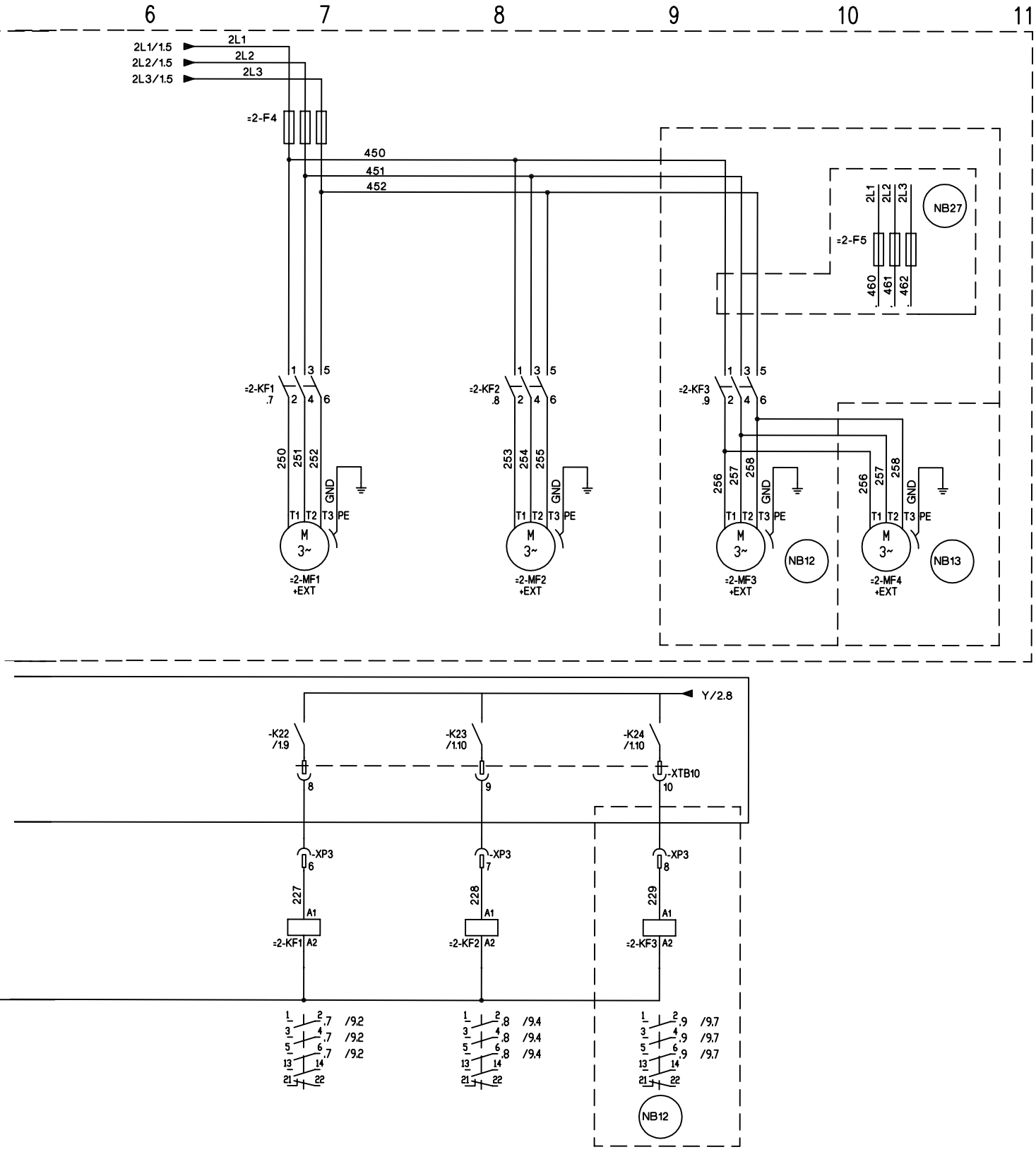


LD16766a

**DWG. 3**

**FIGURE 13** - FAN WIRING, STANDARD LOW SOUND OR ULTRA QUIET, YLAA0070 - YLAA0516 (CONT'D)

# FAN WIRING

035-21583-118 REV C

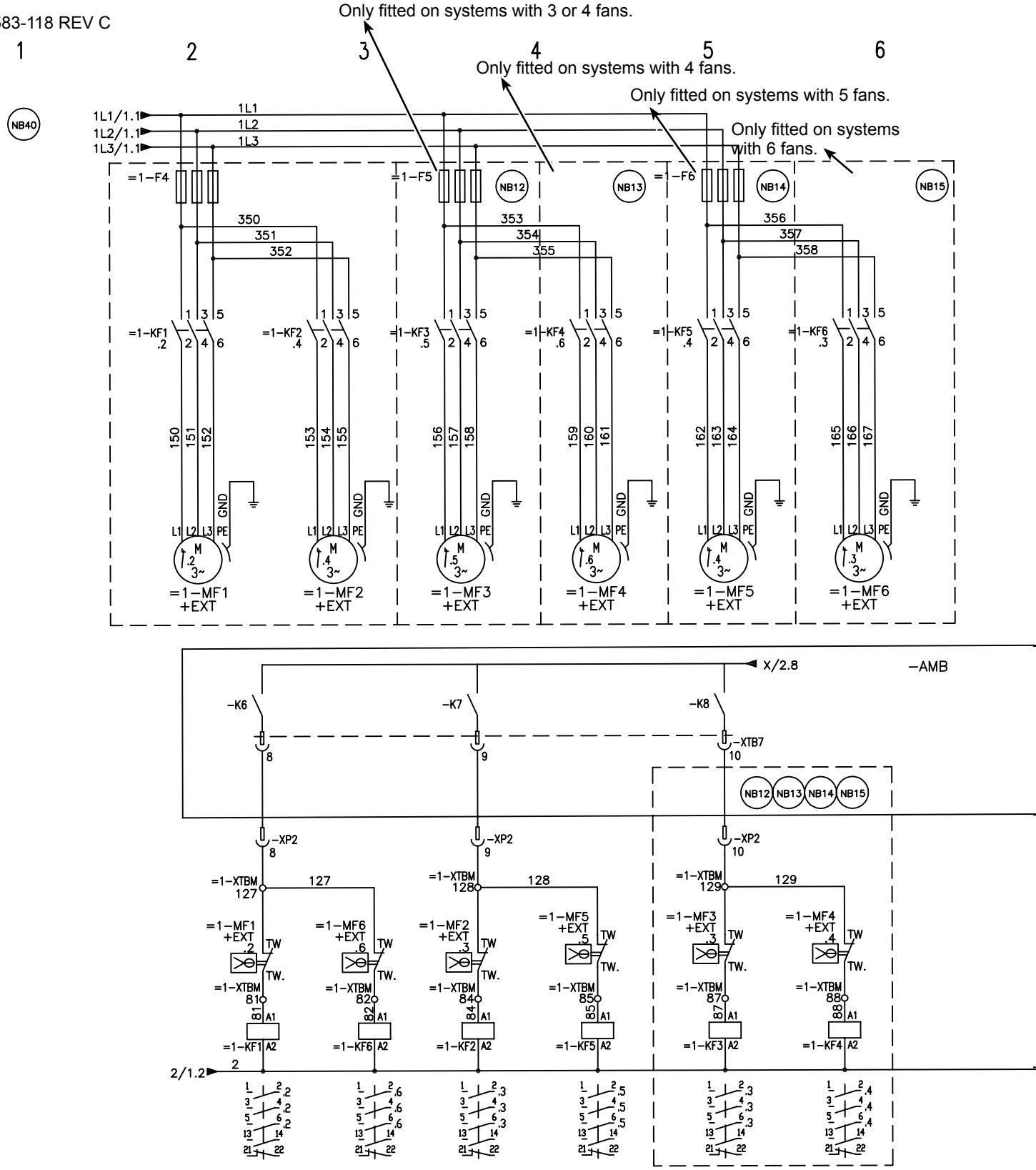


## DWG. 18

**FIGURE 14 -** FAN WIRING, HIGH AIR FLOW

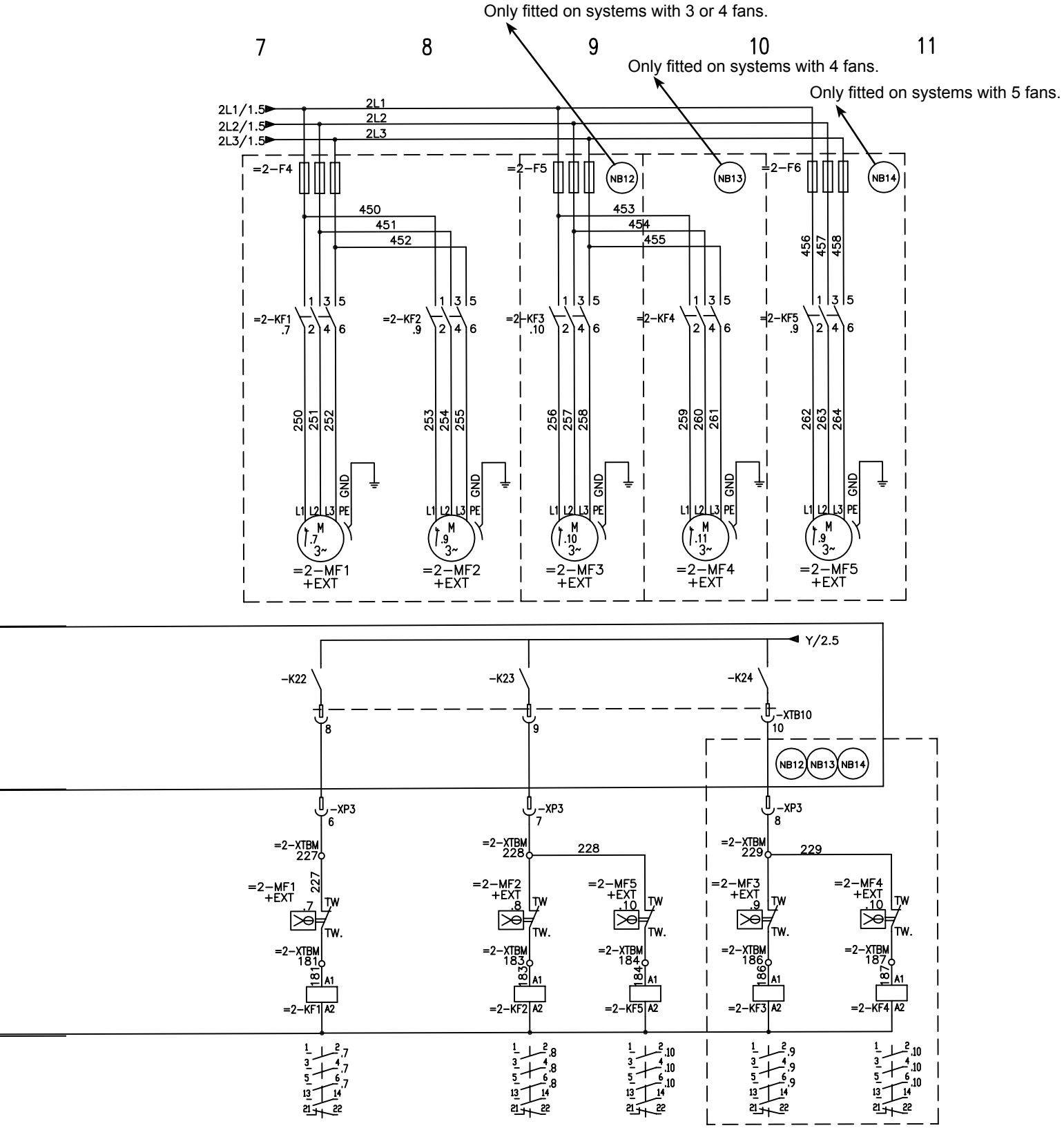


**DWG. 18**

LD16770a

**FIGURE 14** - FAN WIRING, HIGH AIR FLOW (CONT'D)

# SINGLE AND DUAL POINT WIRING OPTIONS

035-21583-116 REV A

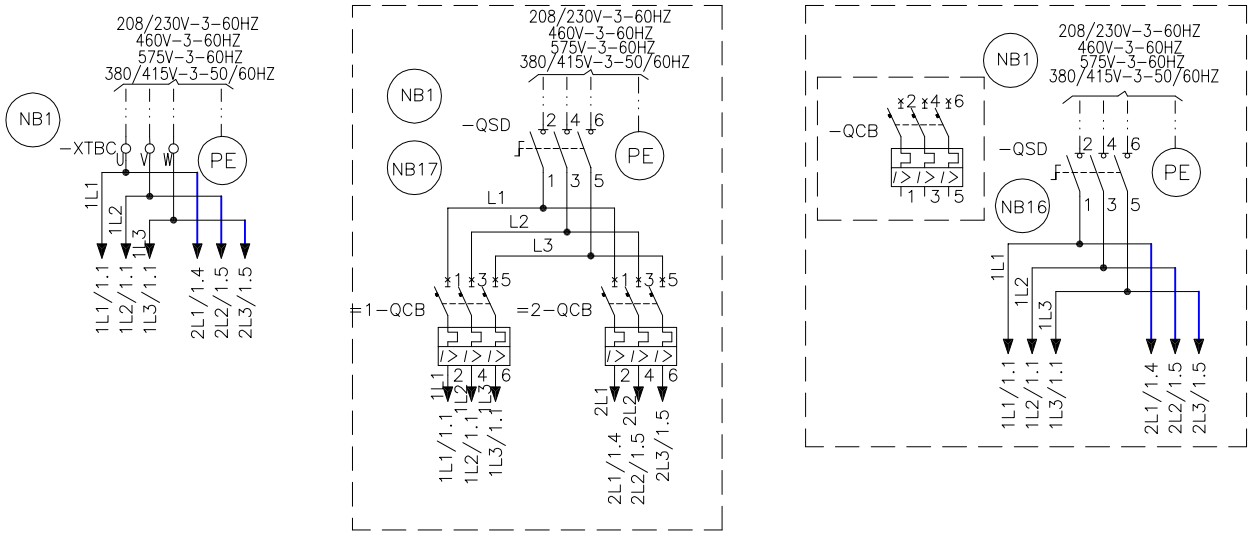


SINGLE POINT WIRING OPTIONS

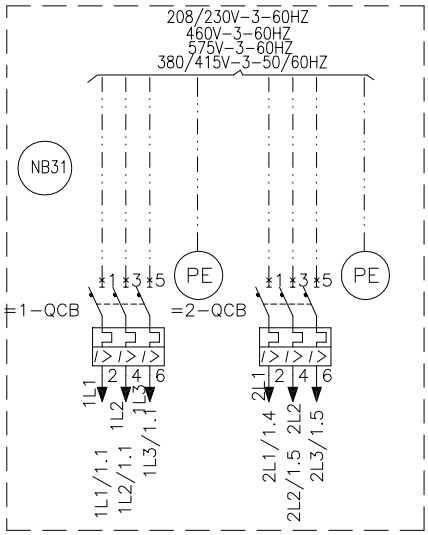


DUAL POINT WIRING OPTIONS

## DWG. 16

**FIGURE 15 -** SINGLE AND DUAL POINT WIRING OPTIONS

# PUMP WIRING

035-21583-105 REV D

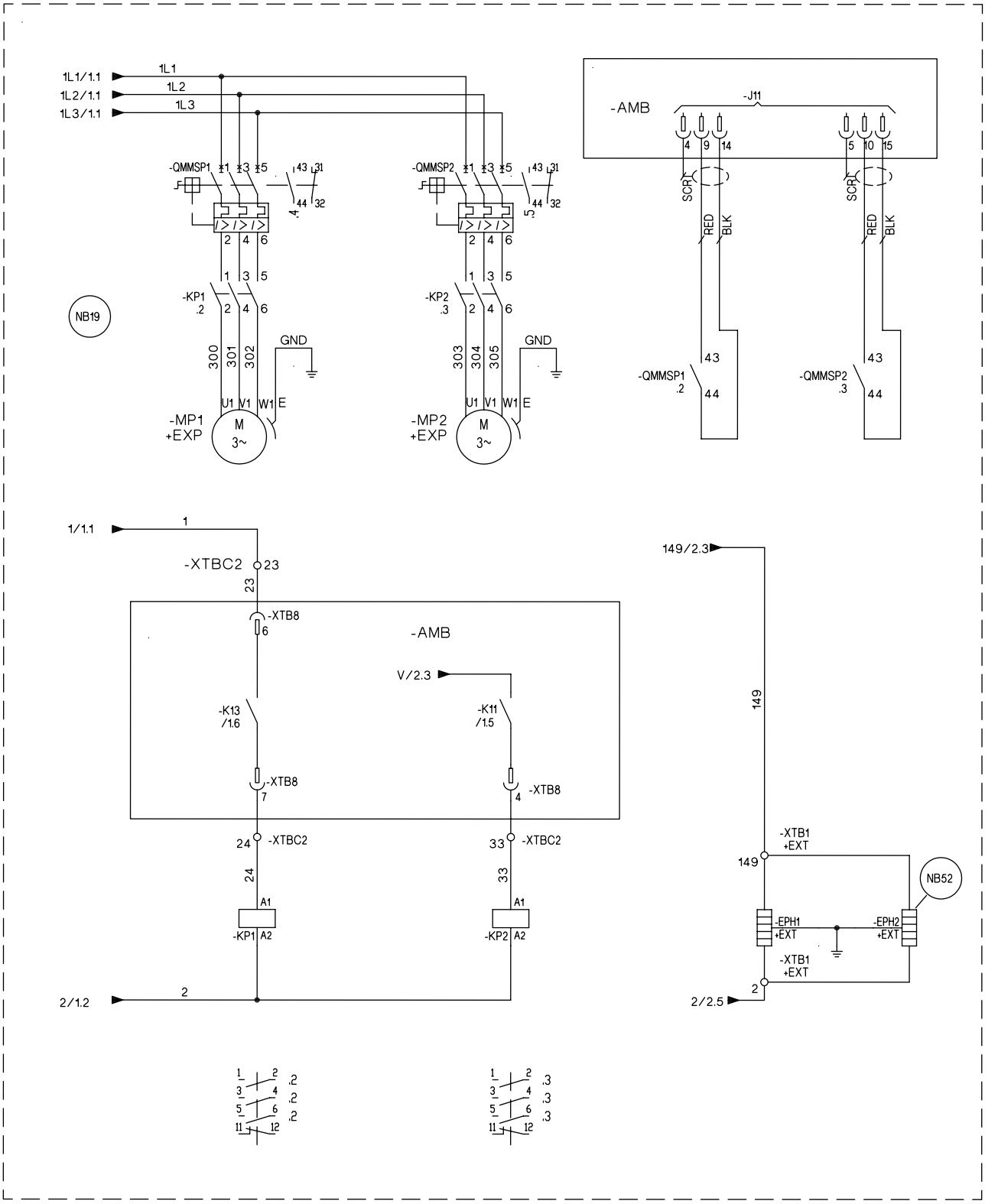


**DWG. 5**

LD16758

**FIGURE 16 -** PUMP WIRING

# COMPRESSOR WIRING

035-21589-106 REV L

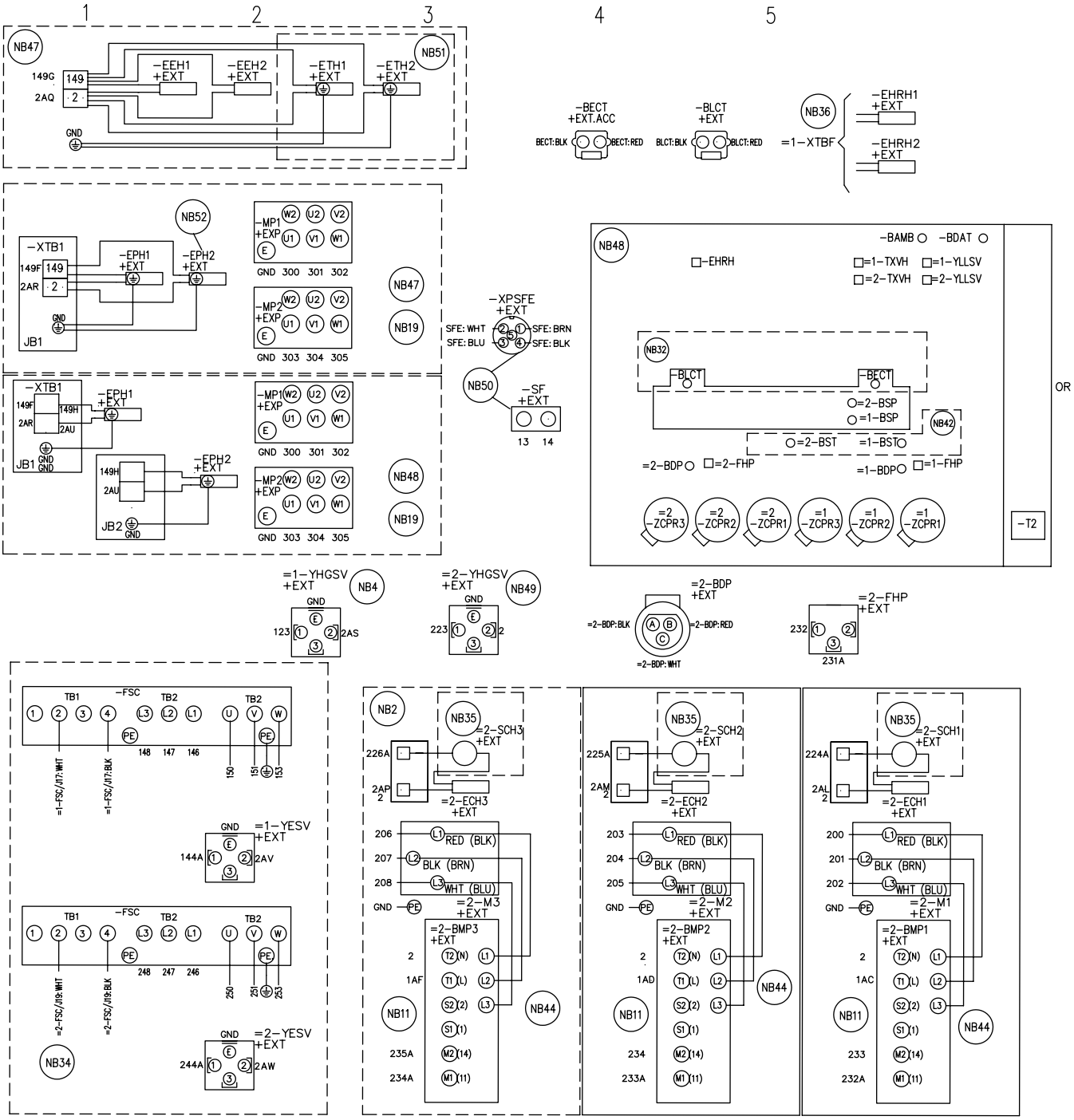


**FIGURE 17 -** COMPRESSOR WIRING

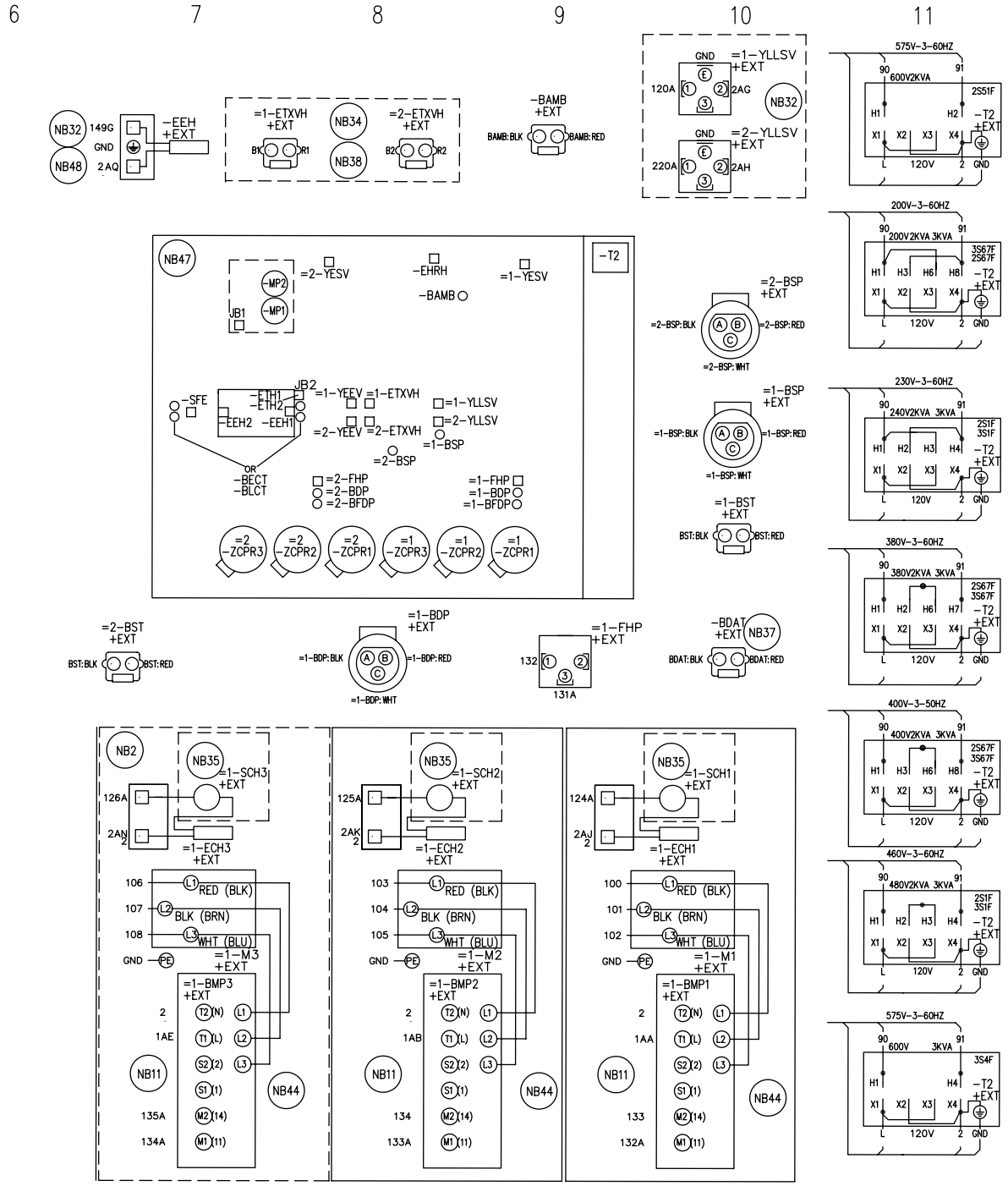


**FIGURE 17** - COMPRESSOR WIRING (CONT'D)

# POWER OPTIONS CONNECTION DIAGRAM

035-21589-103 REV B

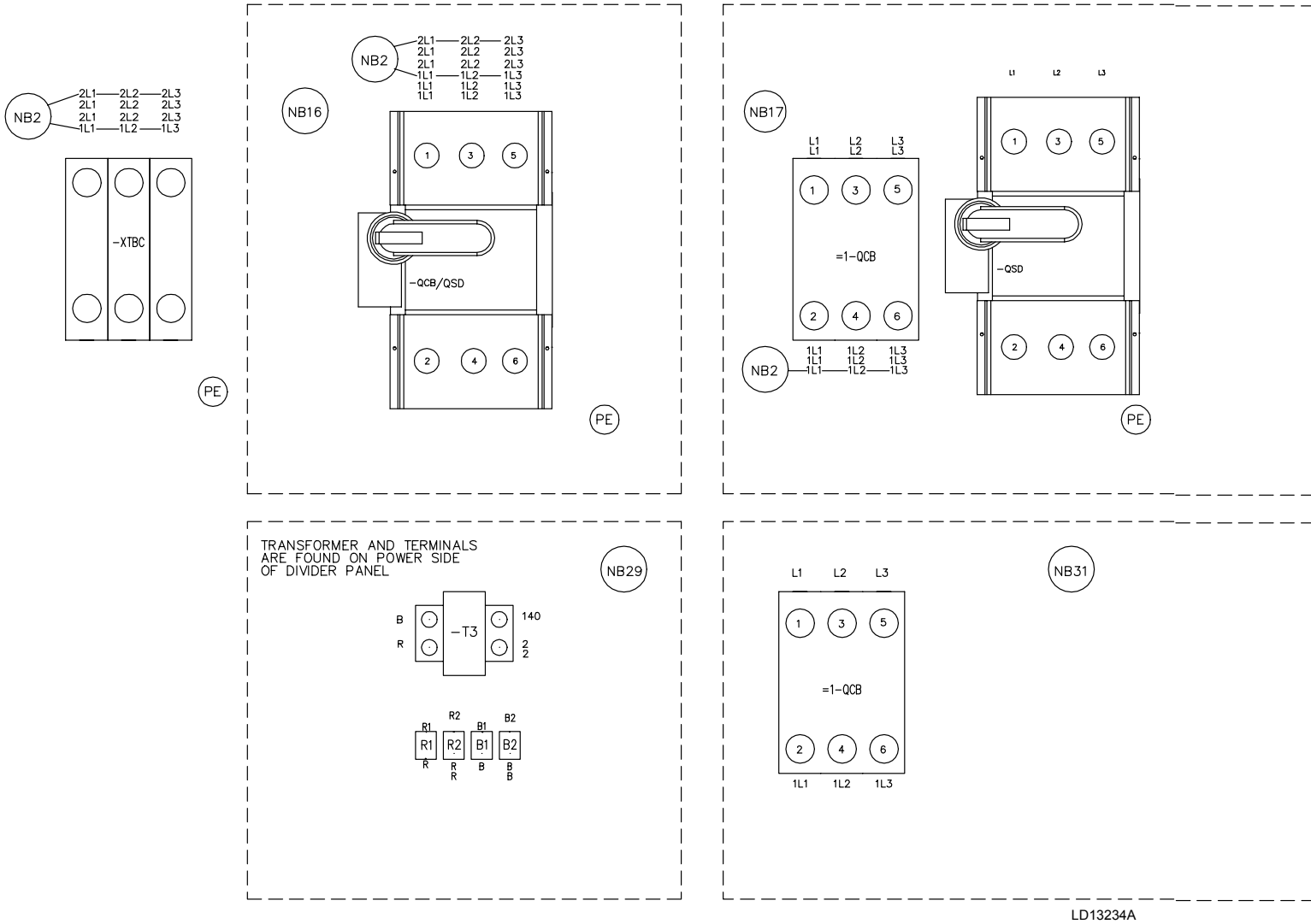


**FIGURE 18 -** POWER OPTIONS CONNECTION DIAGRAM

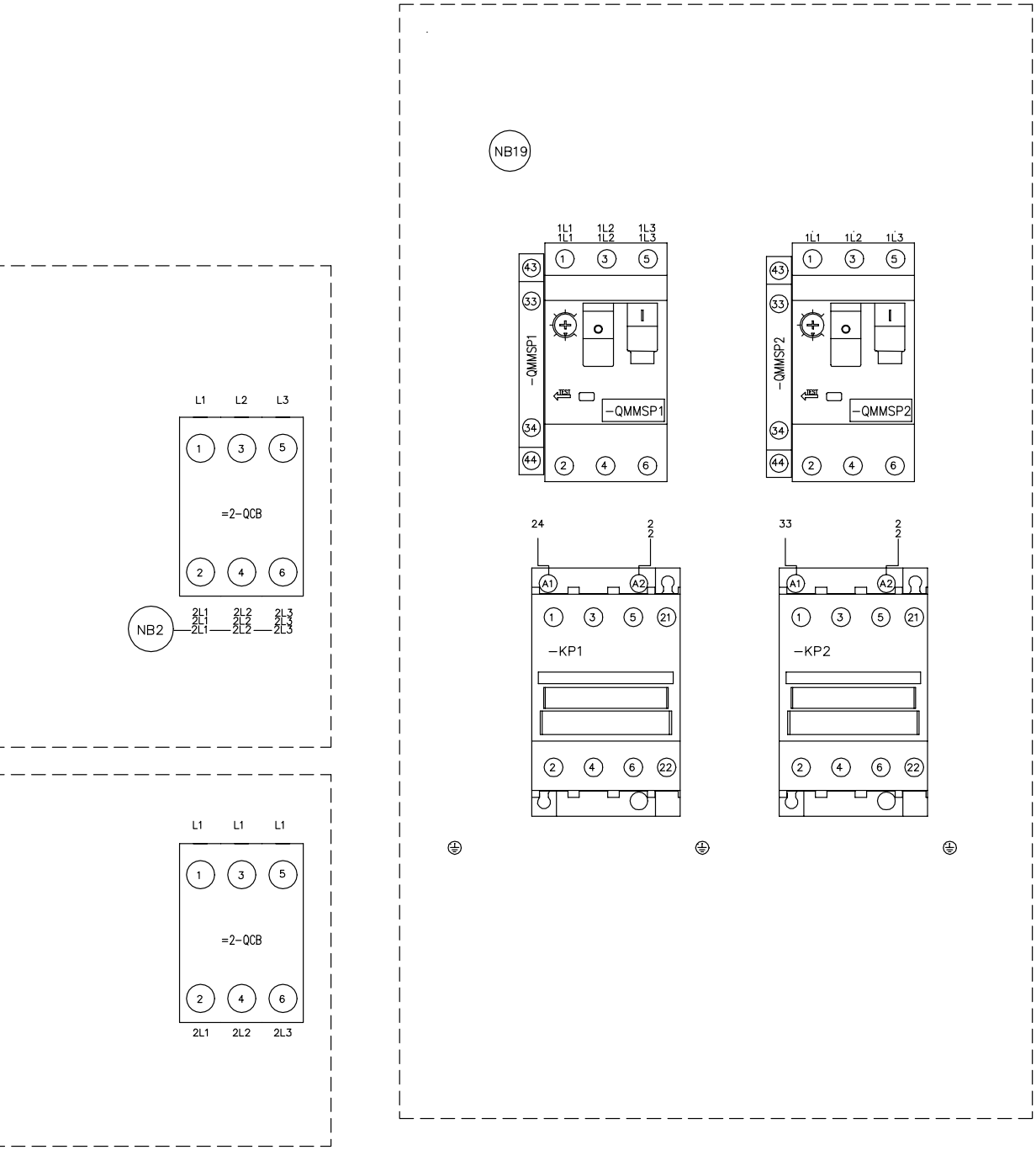


LD13901

**FIGURE 18** - POWER OPTIONS CONNECTION DIAGRAM (CONT'D)

# POWER PANEL

035-21589-101 REV E

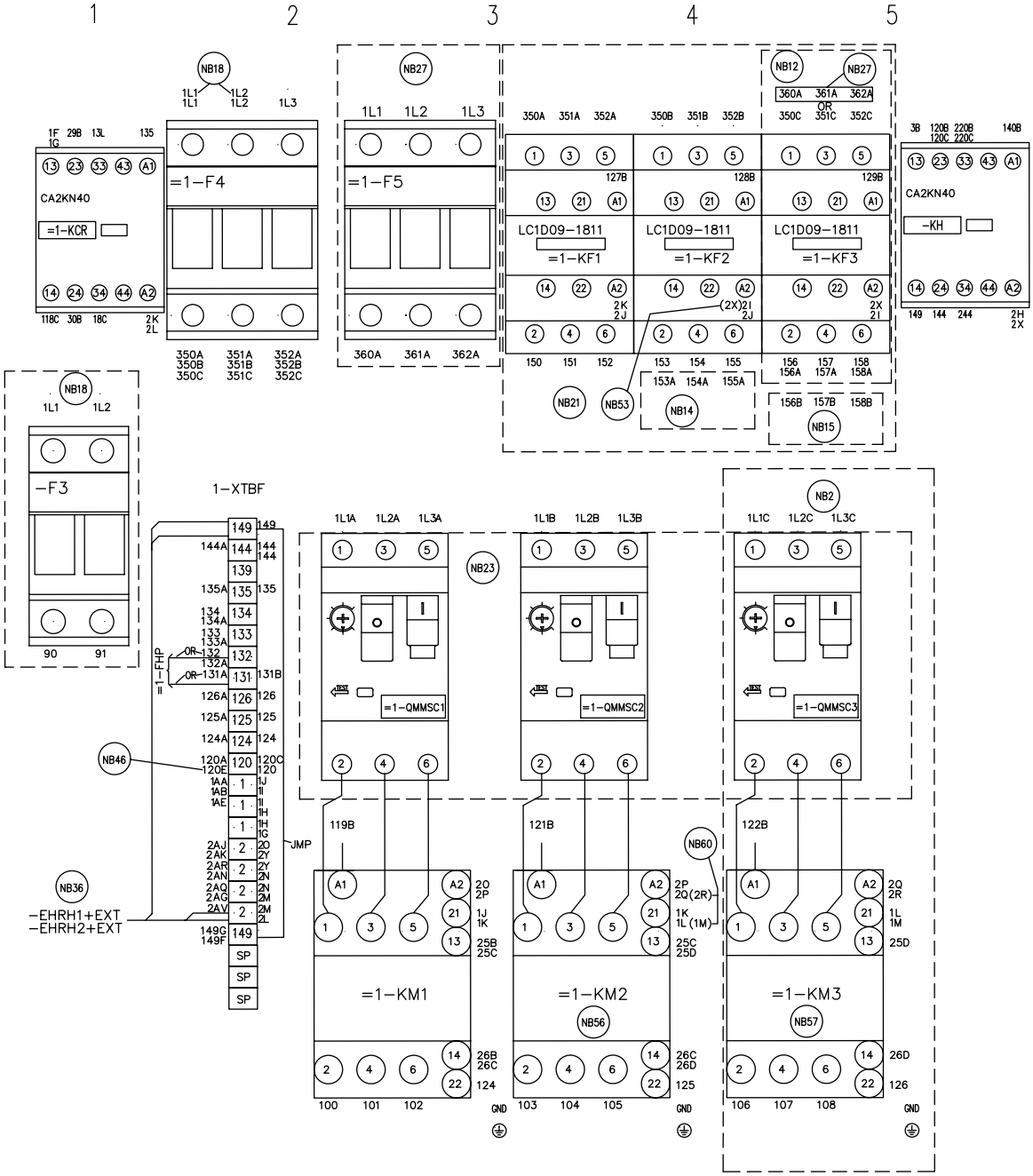


**FIGURE 19 -** POWER PANEL

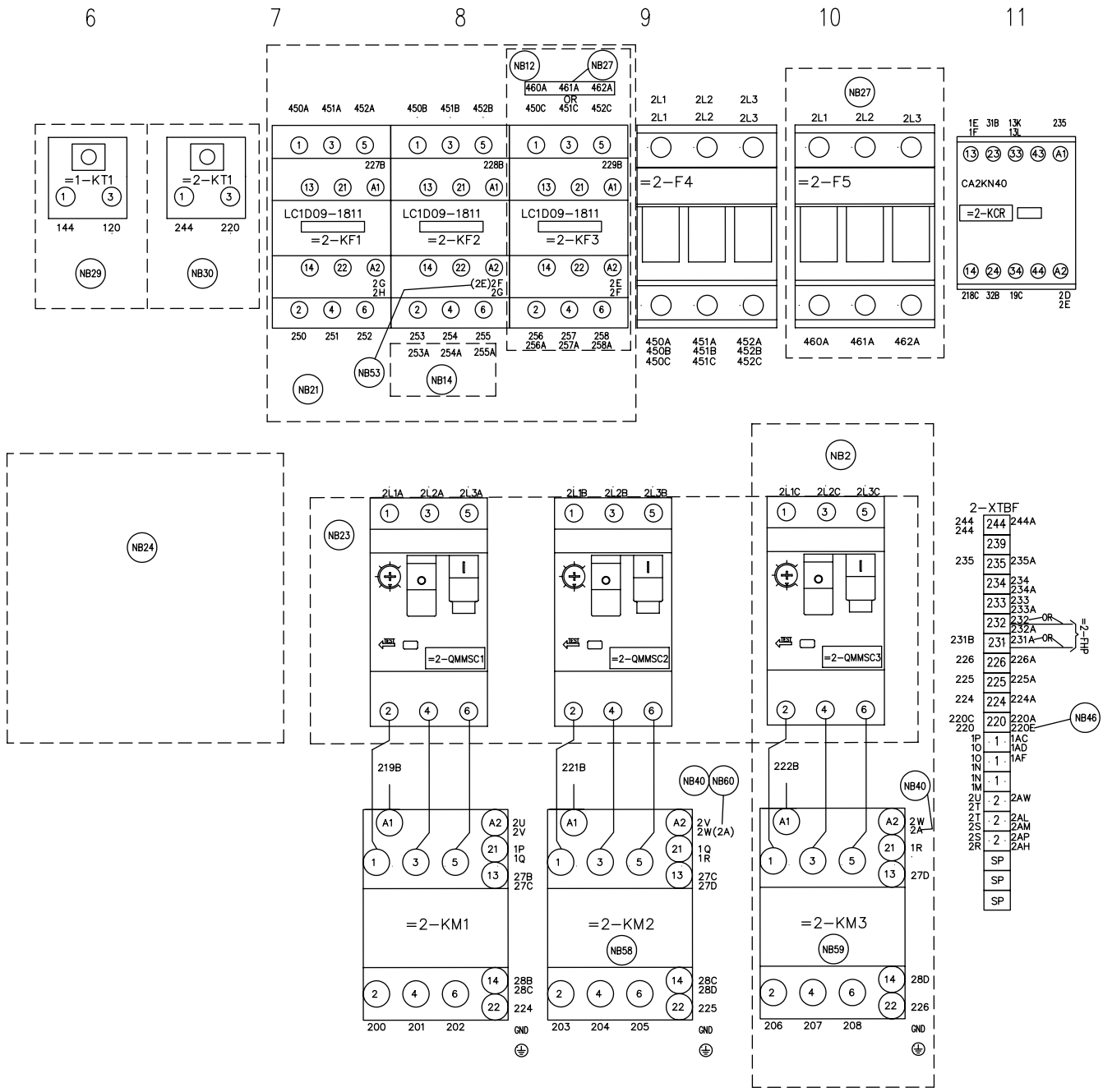


**FIGURE 19** - POWER PANEL (CONT'D)

# MICRO PANEL CONNECTIONS

035-21589-102 REV J

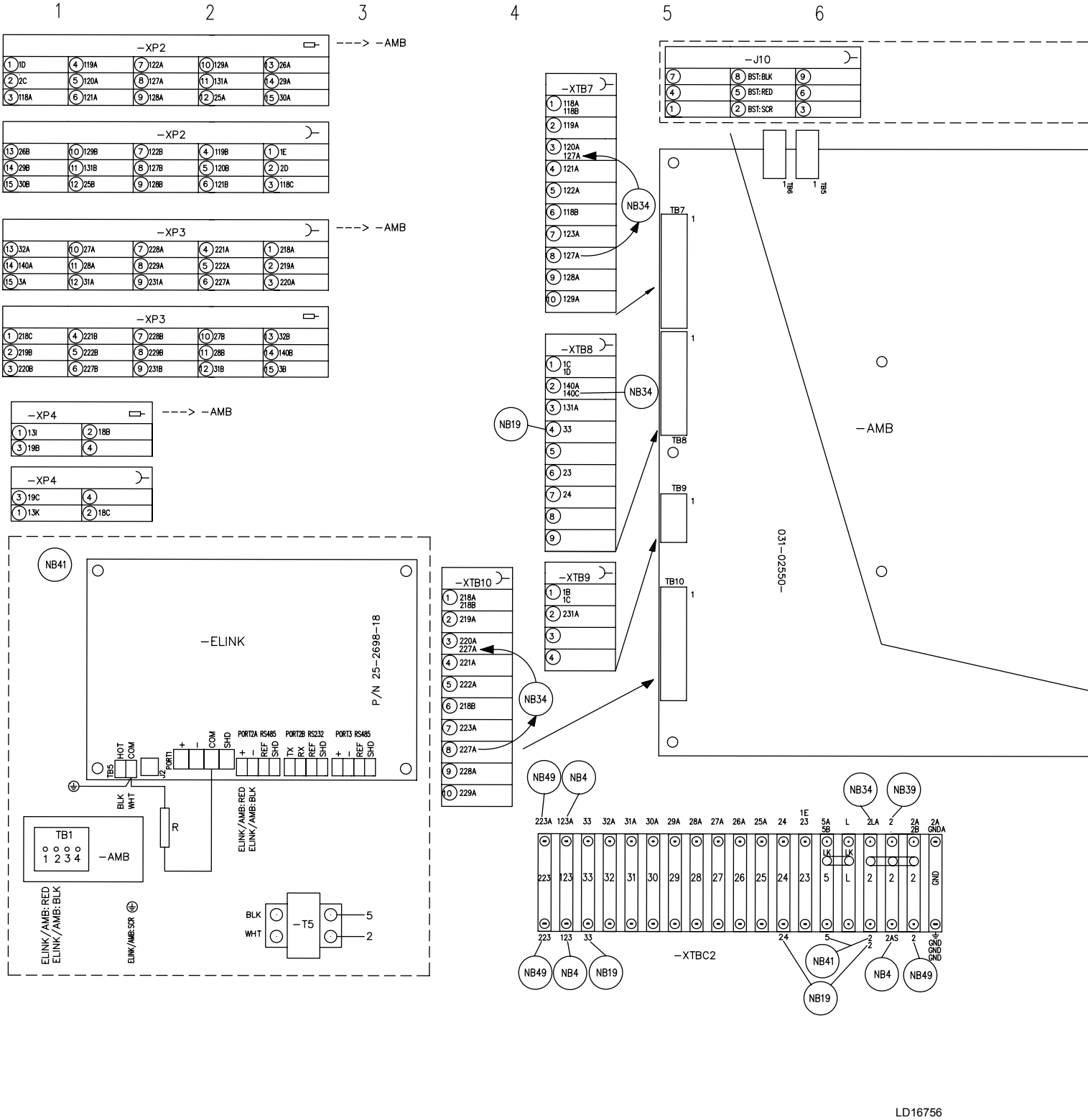


**FIGURE 20 -** MICRO PANEL CONNECTIONS

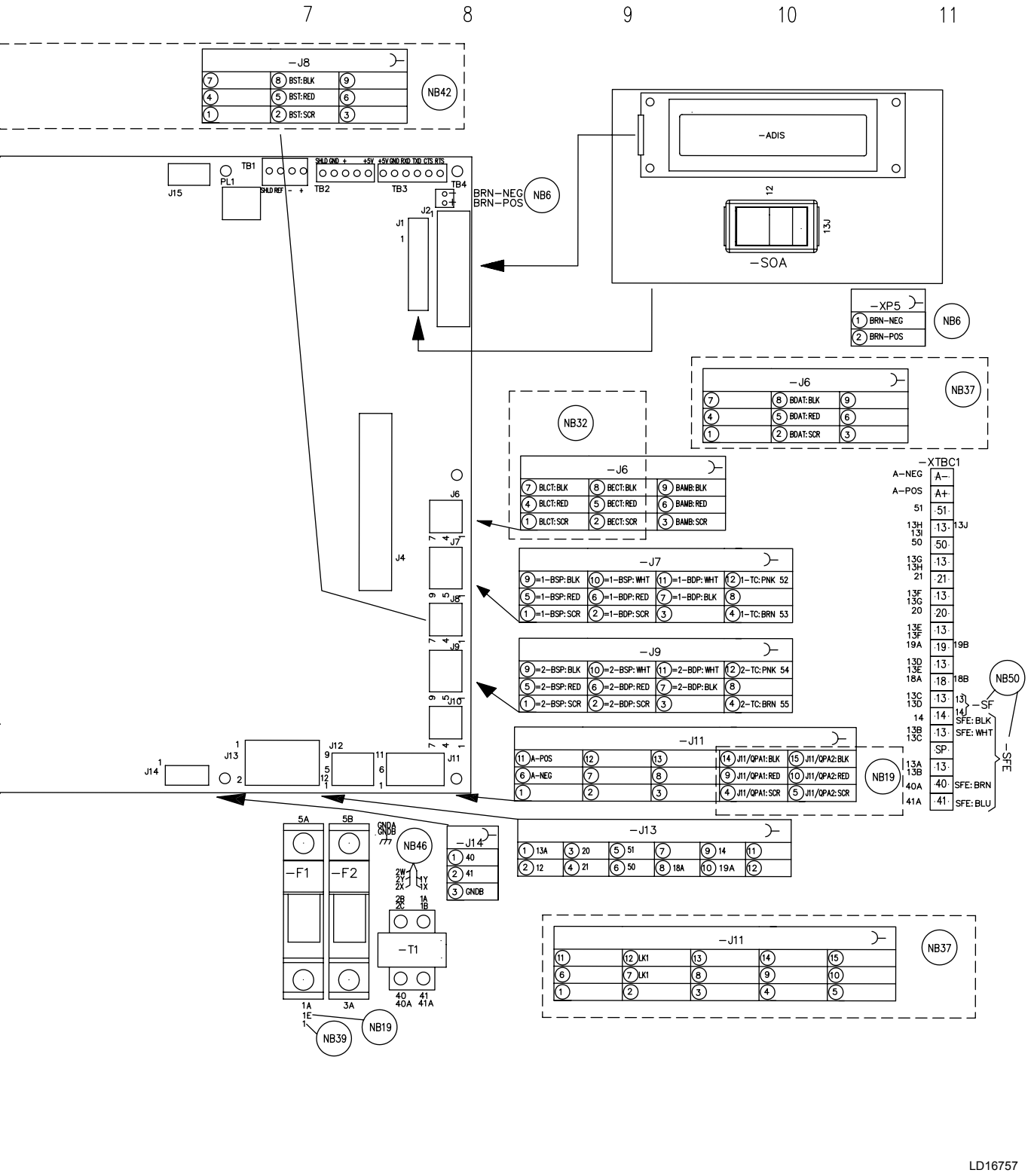


**FIGURE 20** - MICRO PANEL CONNECTIONS (CONT'D)

# DIMENSIONS
# FOUR FAN UNITS

## DIMENSIONS – YLAA0070 TO YLAA0090

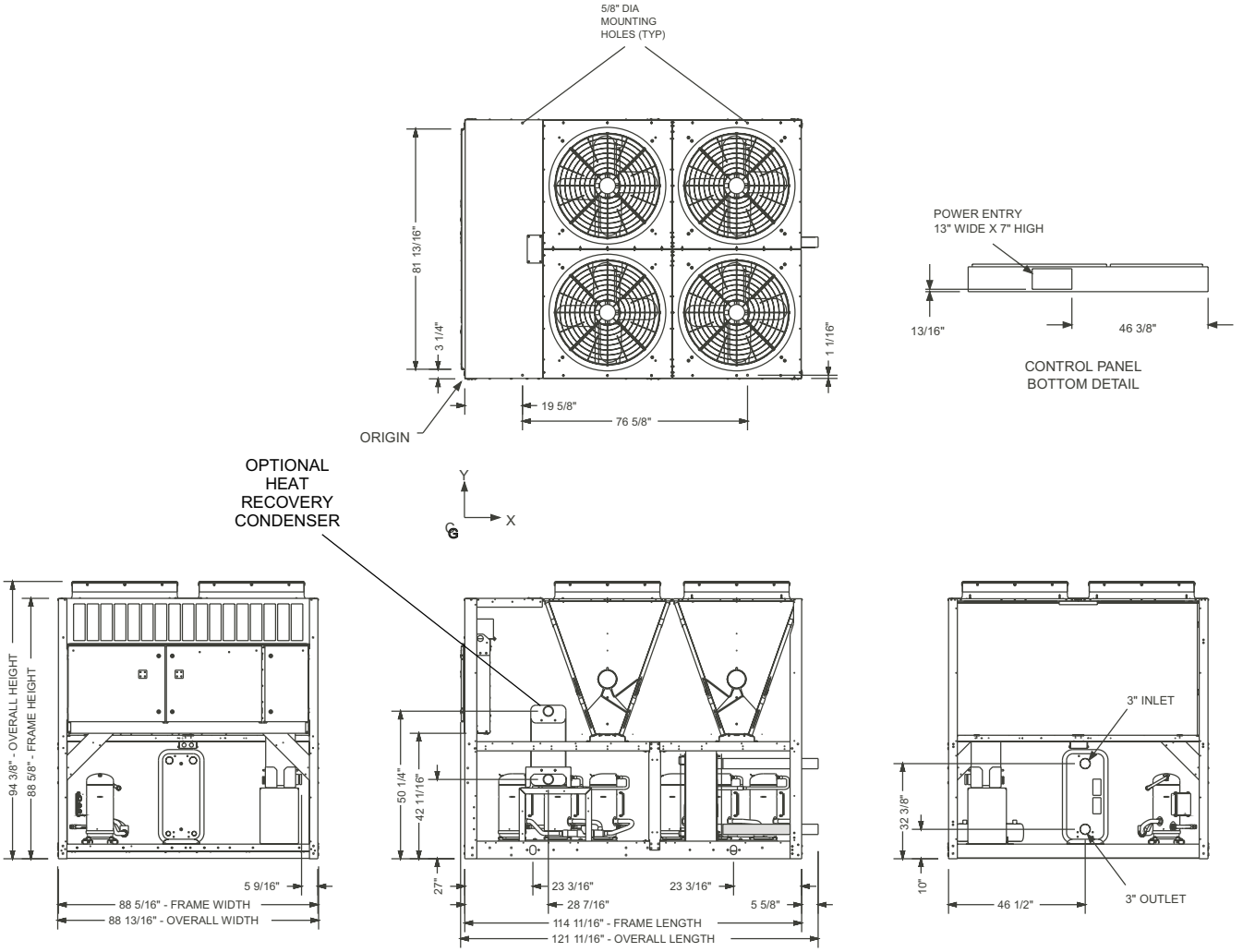


Water Connection Sizes are shown in the Physical Data Table, see *Table 5 on page 46*

4F an_assya

**NOTE:**

Placement on a level surface of free of obstructions (including snow, for winter operation) or air circulation ensures rated performance, reliable operation, and ease of maintenance. Site restrictions may compromise minimum clearances indicated below, resulting in unpredictable airflow patterns and possible diminished performance. Johnson Control's unit controls will optimize operation without nuisance high-pressure safety cutouts; however, the system designer must consider potential performance degradation. Access to the unit control center assumes the unit is no higher than on spring isolators. Recommended minimum clearances: Side to wall – 6'; rear to wall – 6'; control panel to end wall – 4'0"; top – no obstructions allowed; distance between adjacent units – 10'. No more than one adjacent wall may be higher than the unit.

# DIMENSIONS – YLAA0100
# FIVE FAN UNITS

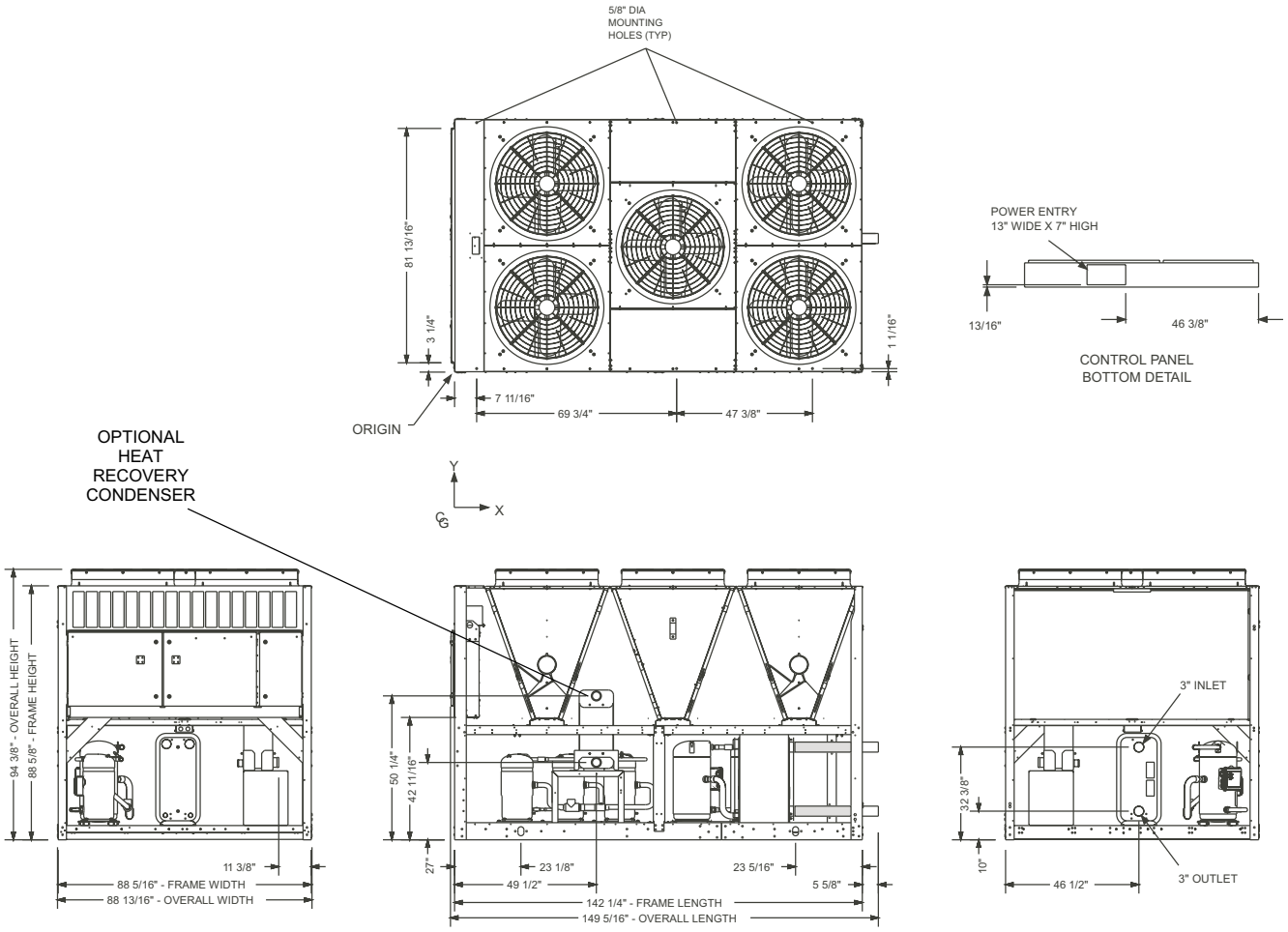


Five Fan Units

**NOTE:**

Placement on a level surface of free of obstructions (including snow, for winter operation) or air circulation ensures rated performance, reliable operation, and ease of maintenance. Site restrictions may compromise minimum clearances indicated below, resulting in unpredictable airflow patterns and possible diminished performance. Johnson Control's unit controls will optimize operation without nuisance high-pressure safety cutouts; however, the system designer must consider potential performance degradation. Access to the unit control center assumes the unit is no higher than on spring isolators. Recommended minimum clearances: Side to wall – 6'; rear to wall – 6'; control panel to end wall – 4'0"; top – no obstructions allowed; distance between adjacent units – 10'. No more than one adjacent wall may be higher than the unit.

# DIMENSIONS – YLAA0091 TO YLAA0120 SIX FAN UNITS

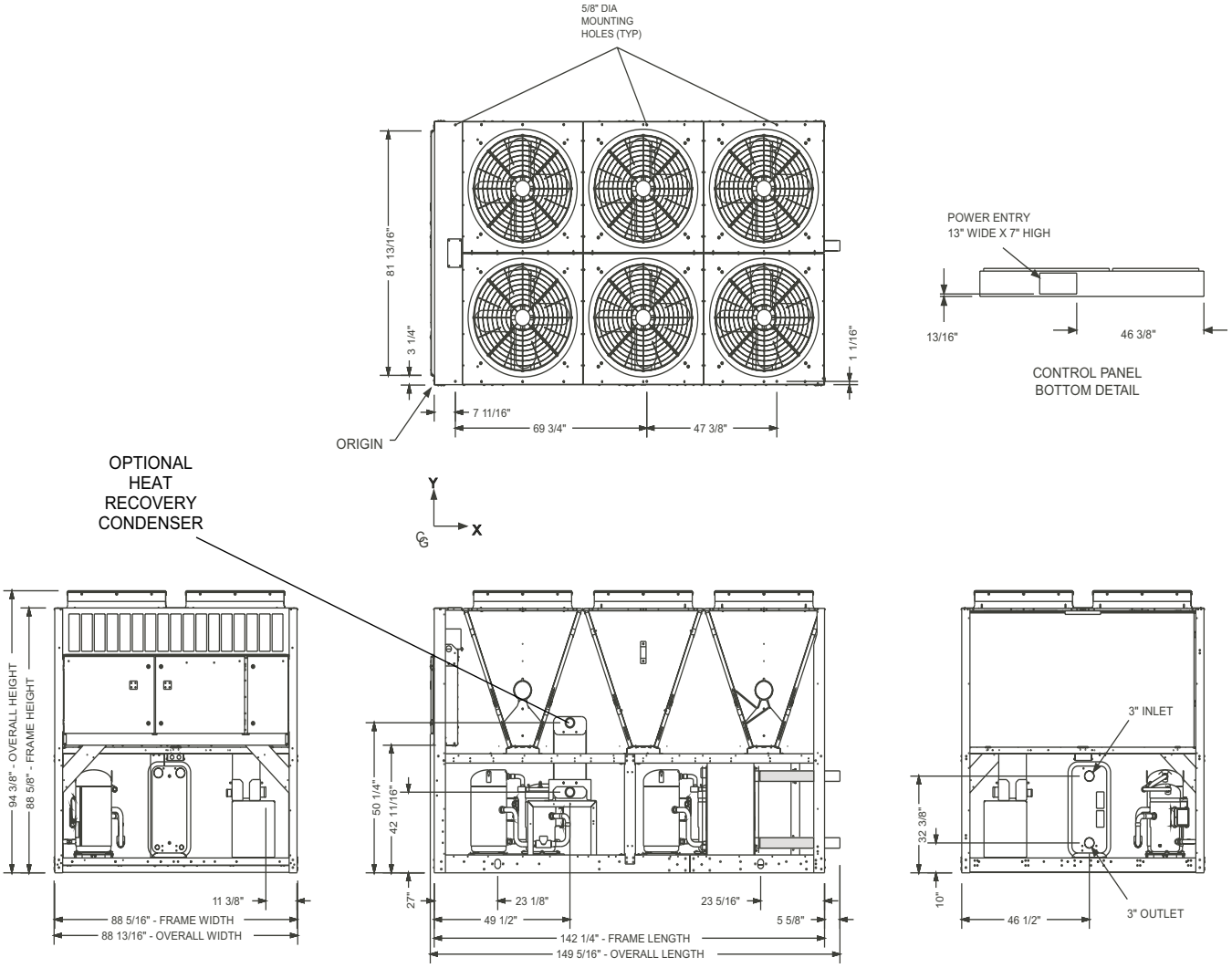


Water Connection Sizes are shown in the Physical Data Table, see *Table 5 on page 46*

6F an_assya

**NOTE:**

Placement on a level surface of free of obstructions (including snow, for winter operation) or air circulation ensures rated performance, reliable operation, and ease of maintenance. Site restrictions may compromise minimum clearances indicated below, resulting in unpredictable airflow patterns and possible diminished performance. Johnson Control's unit controls will optimize operation without nuisance high-pressure safety cutouts; however, the system designer must consider potential performance degradation. Access to the unit control center assumes the unit is no higher than on spring isolators. Recommended minimum clearances: Side to wall – 6'; rear to wall – 6'; control panel to end wall – 4'0"; top – no obstructions allowed; distance between adjacent units – 10'. No more than one adjacent wall may be higher than the unit.

# DIMENSIONS – YLAA 0136SE, 0155SE, 0142HE EIGHT FAN UNITS

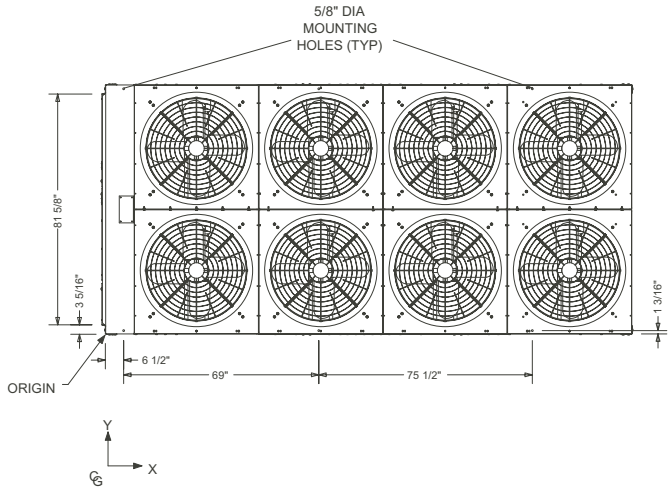


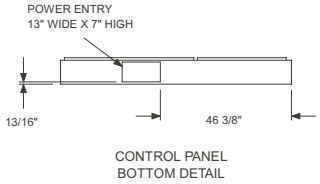


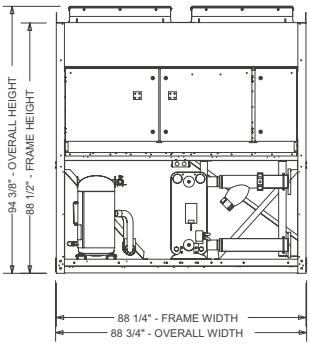


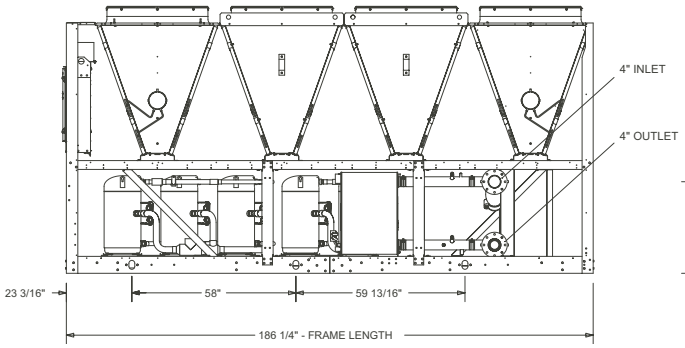


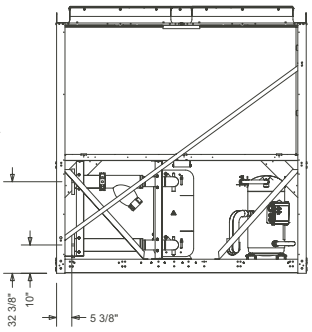


**NOTE:**

Placement on a level surface of free of obstructions (including snow, for winter operation) or air circulation ensures rated performance, reliable operation, and ease of maintenance. Site restrictions may compromise minimum clearances indicated below, resulting in unpredictable airflow patterns and possible diminished performance. Johnson Controls's unit controls will optimize operation without nuisance high-pressure safety cut-outs; however, the system designer must consider potential performance degradation. Access to the unit control center assumes the unit is no higher than on spring isolators. Recommended minimum clearances: Side to wall – 6'; rear to wall – 6'; control panel to end wall – 4'0''; top – no obstructions allowed; distance between adjacent units – 10'. No more than one adjacent wall may be higher than the unit.

# DIMENSIONS – YLAA 0170SE, 0156HE, 0175HE

## TEN FAN UNITS

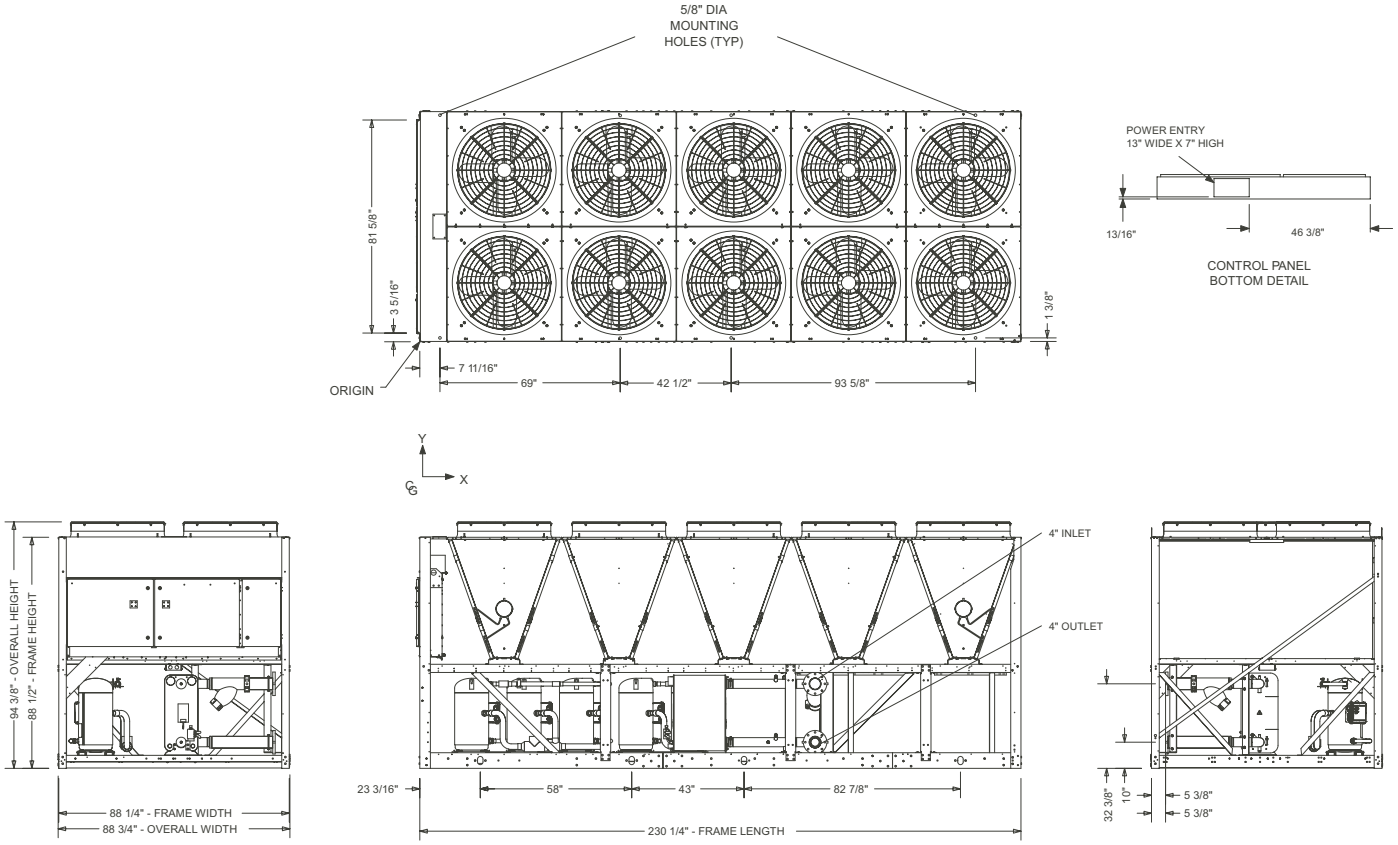


**NOTE:**

Placement on a level surface of free of obstructions (including snow, for winter operation) or air circulation ensures rated performance, reliable operation, and ease of maintenance. Site restrictions may compromise minimum clearances indicated below, resulting in unpredictable airflow patterns and possible diminished performance. Johnson Controls's unit controls will optimize operation without nuisance high-pressure safety cut-outs; however, the system designer must consider potential performance degradation. Access to the unit control center assumes the unit is no higher than on spring isolators. Recommended minimum clearances: Side to wall – 6'; rear to wall – 6'; control panel to end wall – 4'0''; top – no obstructions allowed; distance between adjacent units – 10'. No more than one adjacent wall may be higher than the unit.

## WEIGHT DISTRIBUTION AND ISOLATOR MOUNTING POSITIONS

### General

Weights of specific chiller models vary significantly as options are added. As a result, total weights, weights at individual isolator positions, and actual isolator selection at each position cannot be published due to the vast number of possible combinations. This information will be available when the specific chiller/ option selection is made from the local Johnson Controls sales office. Be aware, weights will change with each option along with possible isolator changes. Weights and isolators may need to be recalculated when the option selections are changed.

Whenever the isolator option is ordered, the isolators will be shipped loose with the chiller. Packed with the isolators and also in the control panel information packet is a drawing and table specifically for each chiller, based on the option selection. The drawing and table will be similar to the two samples shown below and on the following page. The drawing will show the isolator locations along with the weight in pounds and kilograms at the specific location, isolator position, and location measurements for each isolator.

### Sample Isolator Location Drawings

See *Figure 21* below for sample printouts supplied in the isolator package and in the chiller panel literature packets.

| UNIT SHIPPING WEIGHT (Display on unit data nameplate) | KG | LBS. |
|---|---|---|
| | 2032 | 4480 |



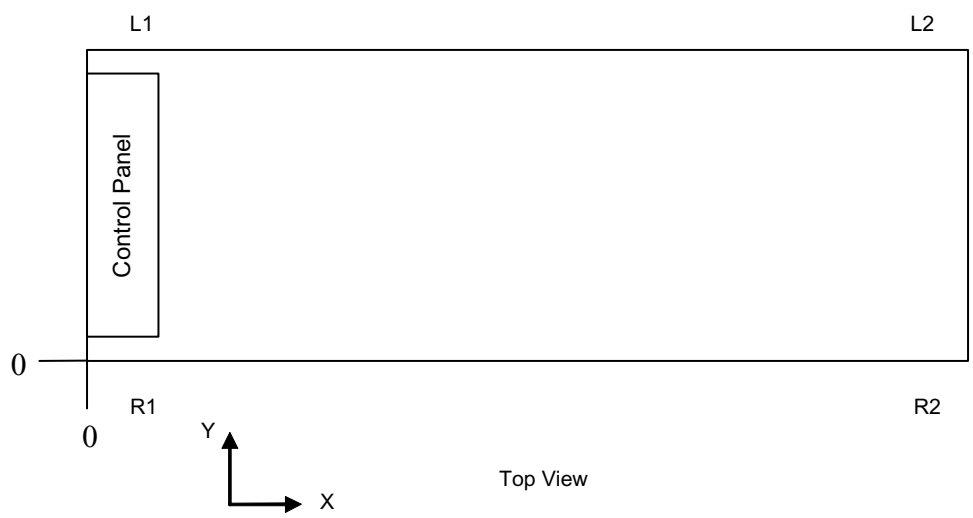


| LOCATION | X DISTANCE INCHES (MM) | Y DISTANCE INCHES (MM) | VENDOR NUMBER | OPERATING WEIGHT LBS (KG) |
|---|---|---|---|---|
| R1 | 19.5 (495.3) | 1.36 (34.5) | ND-D / Yellow | 1092 (495.3) |
| L1 | 19.5 (495.3) | 86.86 (2206.2) | ND-D / Yellow | 1406 (637.8) |
| R2 | 96.1 (2440.9) | 1.36 (34.5) | ND-D / Yellow | 1015 (460.4) |
| L2 | 96.1 (2440.9) | 86.86 (2206.2) | ND-D / Yellow | 1304 (591.5) |

**FIGURE 21 -** SAMPLE PRINTOUT SUPPLIED IN THE ISOLATOR PACKAGE AND IN THE CHILLER PANEL LITERATURE PACKET

## CLEARANCES

See *Figure 22* below for minimum clearances for all YLAA units.

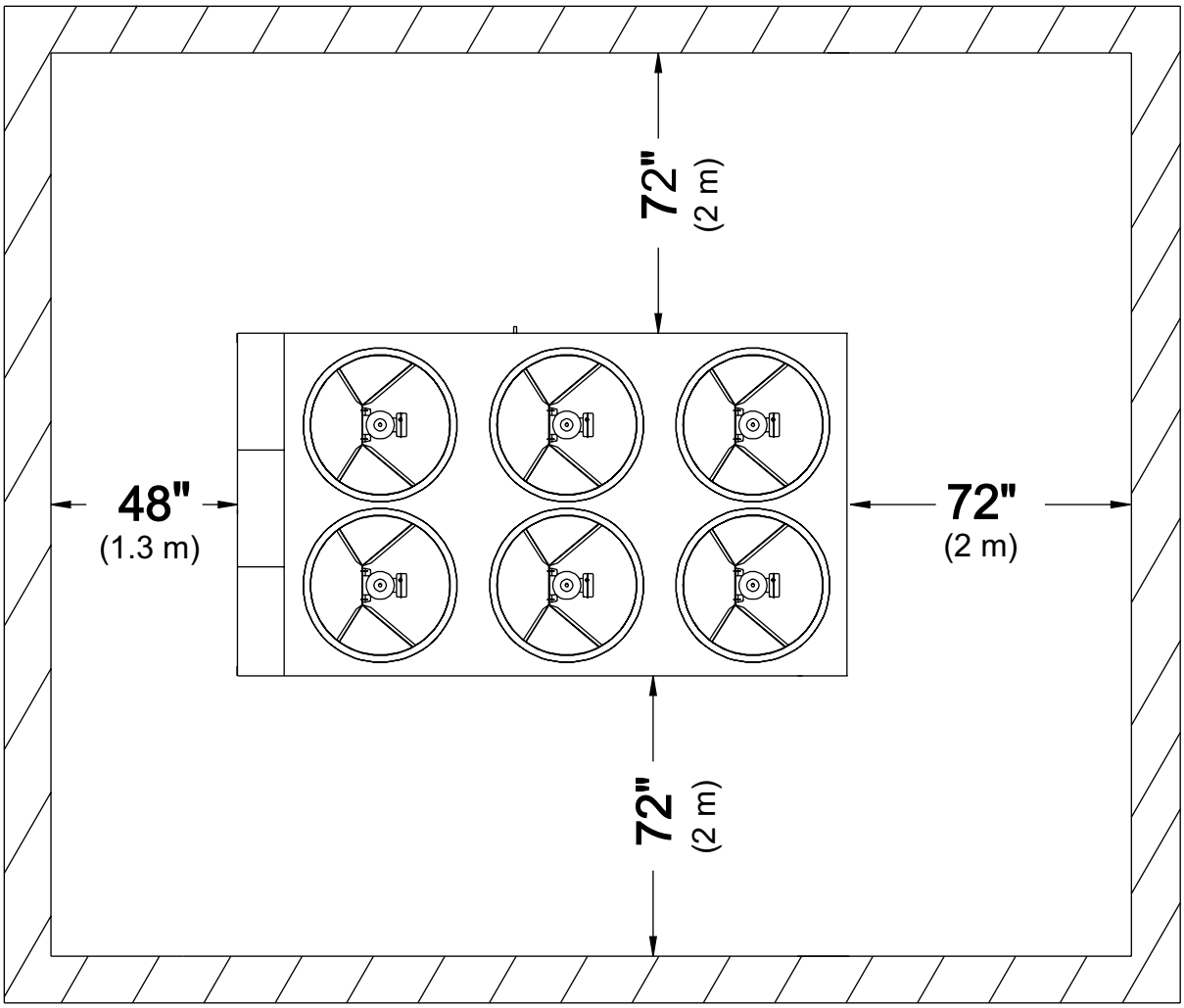


**NOTES**:

1. No obstructions allowed above the unit.
2. Only one adjacent wall may be higher than the unit.
3. Adjacent units should be 10 feet (3 Meters) apart.

**FIGURE 22 -** UNIT CLEARANCES – ALL MODELS

# ISOLATOR LOCATIONS

## FOUR FAN ISOLATOR LOCATIONS

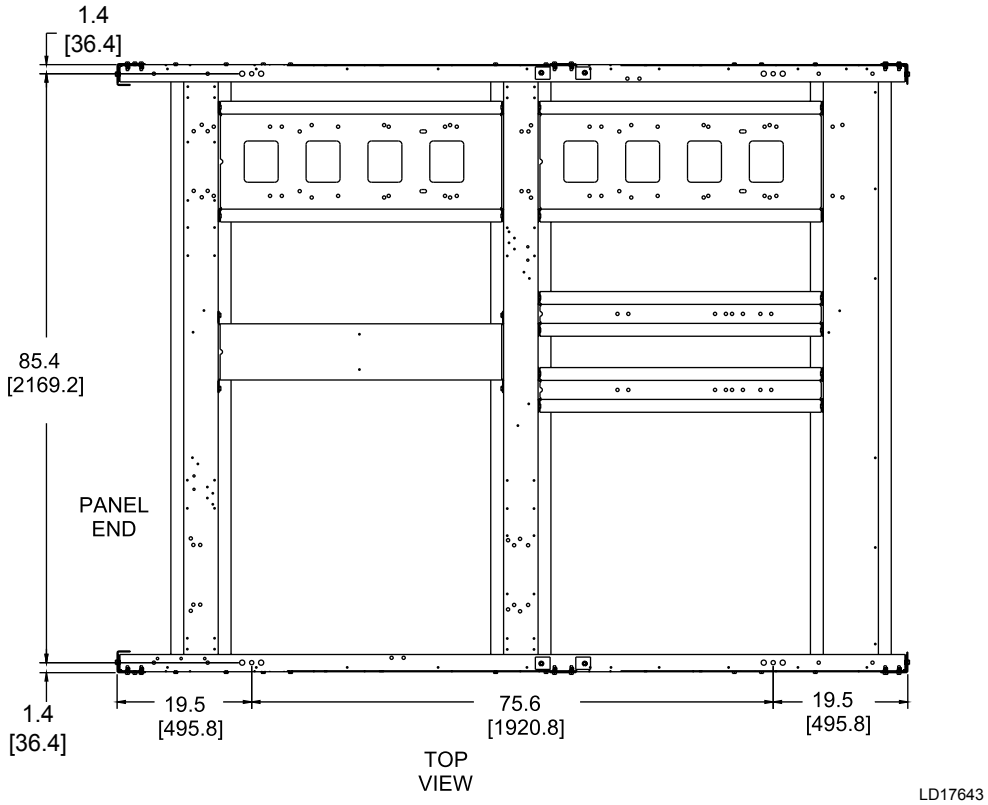


## FIVE AND SIX FAN ISOLATOR LOCATIONS

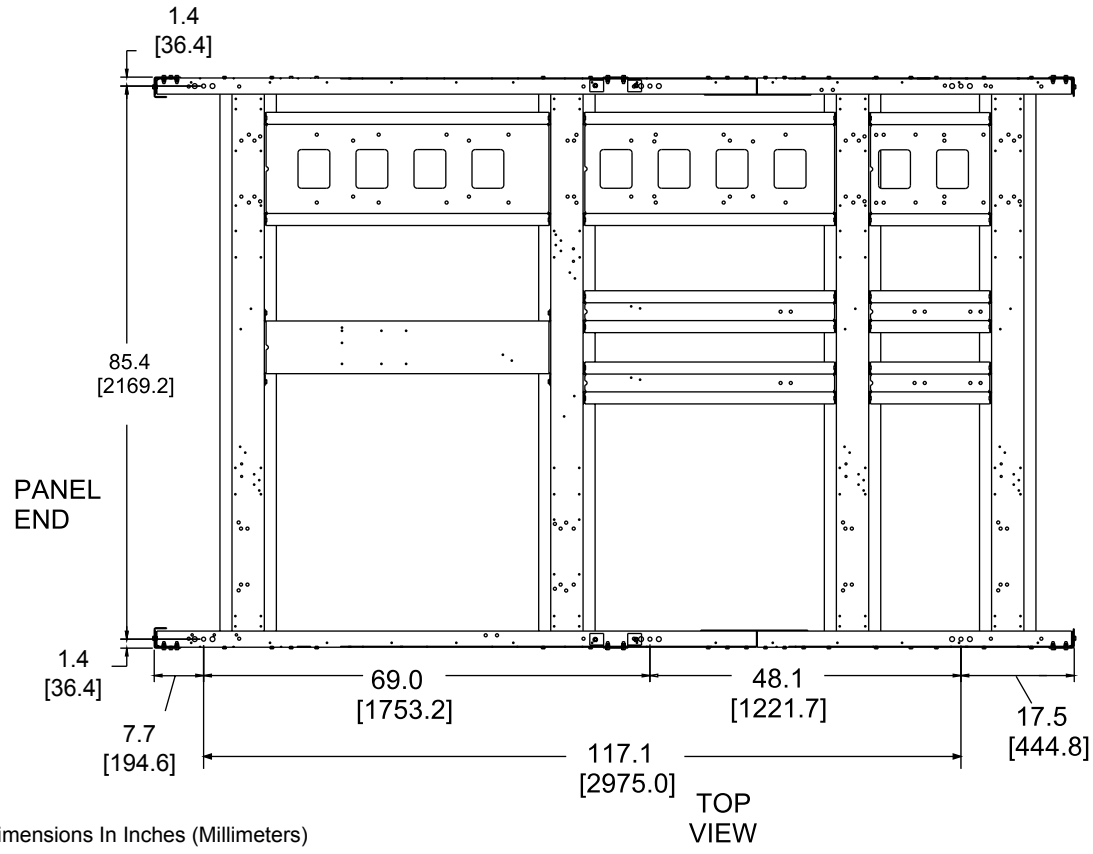


**NOTE:** All Dimensions In Inches (Millimeters)

## EIGHT FAN ISOLATOR LOCATIONS

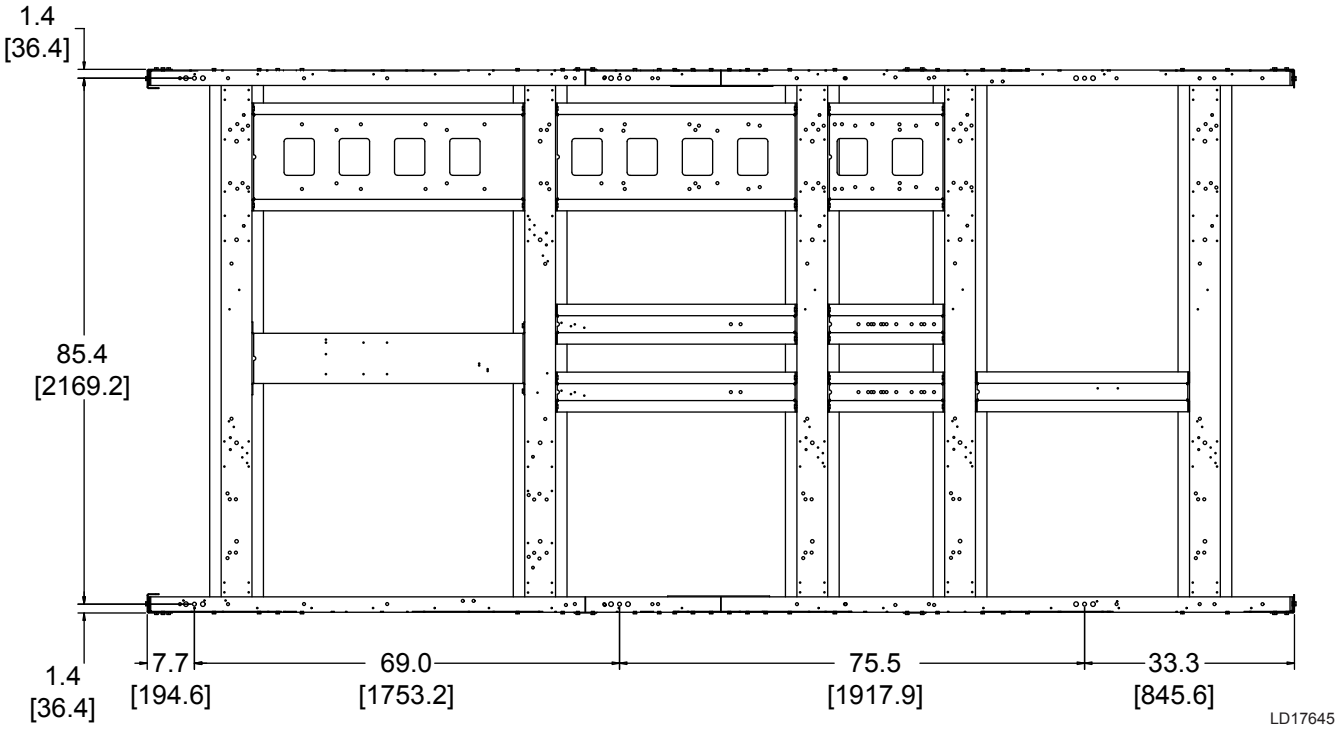


## TEN FAN ISOLATOR LOCATIONS

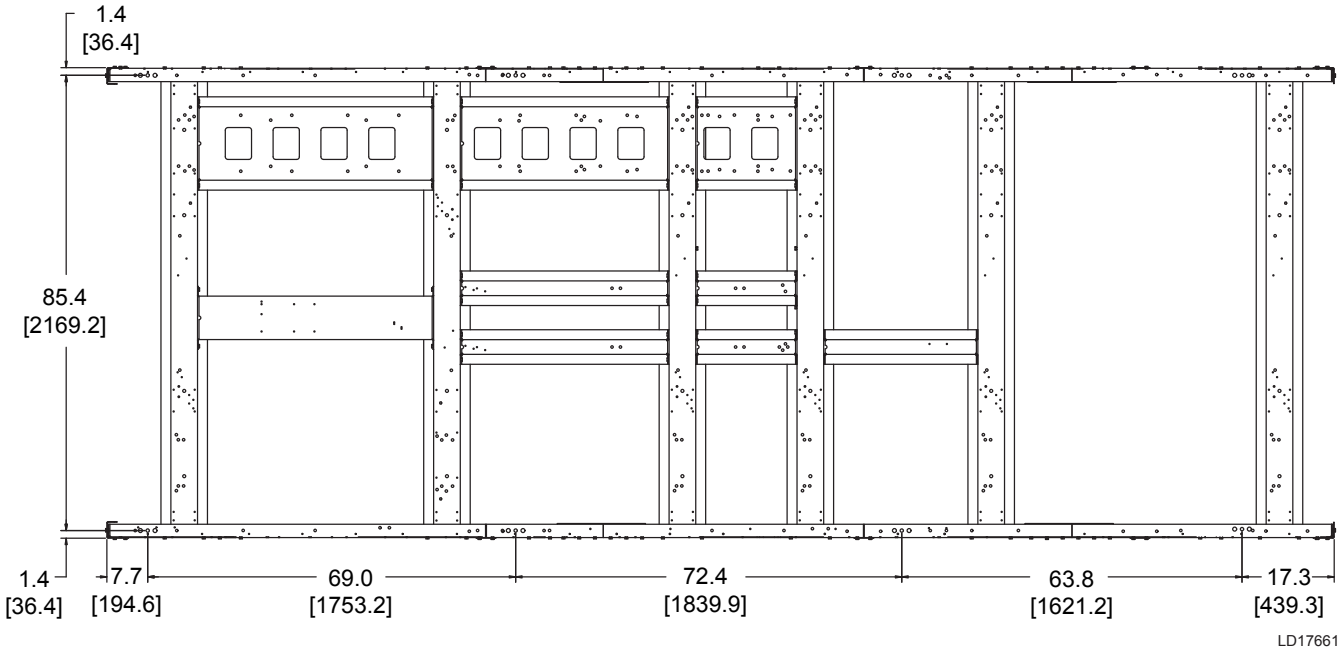


**NOTE:** All Dimensions In Inches (Millimeters)

# ISOLATOR INFORMATION

## One Inch Deflection Spring Isolator Cross-reference

### CP

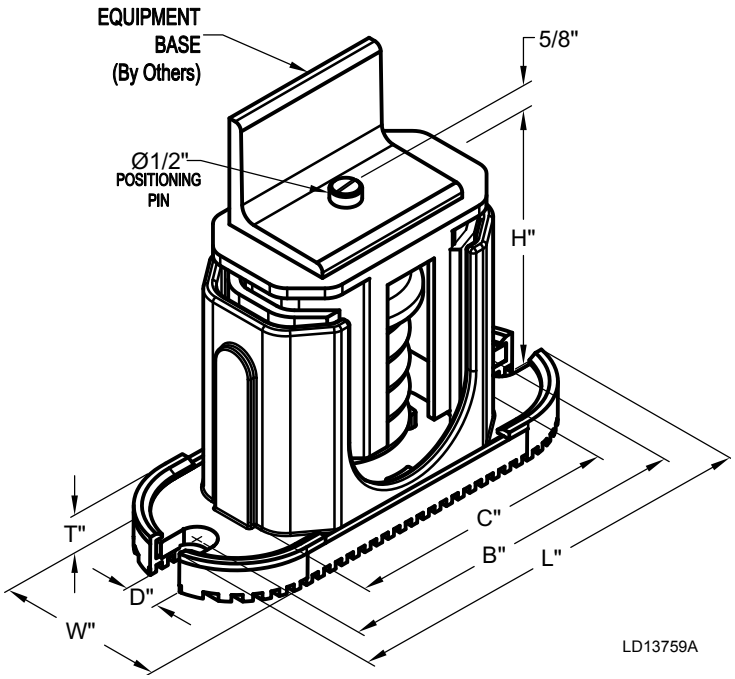


| MOUNT TYPE | DIMENSION DATA (INCHES) | | | | | | |
|---|---|---|---|---|---|---|---|
| | W | D | L | B | C | T | H |
| **CP1** | 3 | 5/8 | 7-3/4 | 6-1/2 | 4-3/4 | 1/2 | 5-5/8 |
| **CP2** | 3 | 5/8 | 10-1/2 | 9-1/4 | 7-3/4 | 9/16 | 6 |

| MODEL NUMBER | RATED CAPACITY (LBS) | DEFLECTION RATED (IN) | COLOR CODE |
|---|---|---|---|
| CP1-1D-85 | 85 | 1.360 | LT. PURPLE |
| CP1-1D-120 | 120 | 1.200 | DK. YELLOW |
| CP1-1D-175 | 175 | 1.170 | DK. BLUE |
| CP1-1D-250 | 250 | 1.400 | YELLOW |
| CP1-1D-340 | 340 | 1.130 | RED |
| CP1-1D-510 | 510 | 1.020 | BLACK |
| CP1-1D-675 | 675 | 1.320 | DK. PURPLE |
| CP1-1D-900 | 900 | 1.020 | DK. GREEN |
| CP1-1D-1200 | 1200 | 0.900 | GRAY |
| CP1-1D-1360 | 1360 | 0.770 | WHITE |
| CP1-1D-1785N | 1785 | 0.880 | GRAY/RED |

| MODEL NUMBER | RATED CAPACITY (LBS) | DEFLECTION RATED (IN) | COLOR CODE |
|---|---|---|---|
| CP2-1D-1020 | 1020 | 1.020 | BLACK |
| CP2-1D-1350 | 1350 | 1.320 | DK. PURPLE |
| CP2-1D-1800 | 1800 | 1.020 | DK. GREEN |
| CP2-1D-2400 | 2400 | 0.900 | GRAY |
| CP2-1D-2720 | 2720 | 0.770 | WHITE |
| CP2-1D-3570N | 3570 | 0.880 | GRAY / RED |

# ONE INCH DEFLECTION SPRING ISOLATORS INSTALLATION INSTRUCTIONS

1. Read instructions in their entirety before beginning installation.
2. Isolators are shipped fully assembled and are to be positioned in accordance with the submittal drawings or as otherwise recommended.
3. Set isolators on floor, housekeeping pad or subbase, ensuring that all isolators centerlines match the equipment mounting holes. The VMC group recommends that the isolator base (“B”) be installed on a level surface. Shim or grout as required, leveling all isolator bases to the same elevation (1/4-inch maximum difference can be tolerated).
4. Bolt or anchor all isolators to supporting structure utilizing base slotted holes (“C”).
5. Place equipment on top of isolators making sure that mounting holes of the equipment line up with isolator positioning pin (“H”).
6. The adjustment process can only begin after the equipment or machine is at its full operating weight.
7. Adjust each isolator in sequence by turning spring adjusting bolt (“D”) one full counterclockwise turn at a time. Repeat this procedure on all isolators, one at a time.
8. Continue adjusting each isolator until a minimum of 1/4” clearance is achieved between the lower housing and upper housing. (See drawing below).
9. Fine adjust isolators to level equipment.
10. Installation is complete.

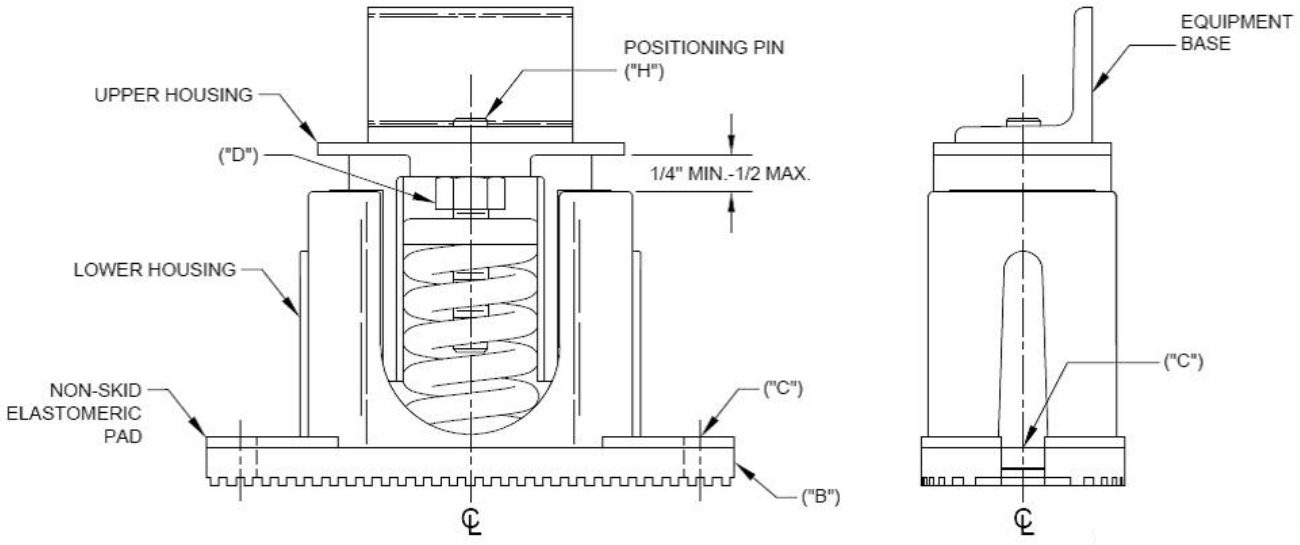


LD13790

# 2” DEFLECTION ISOLATOR CROSS-REFERENCE

## Y2RS

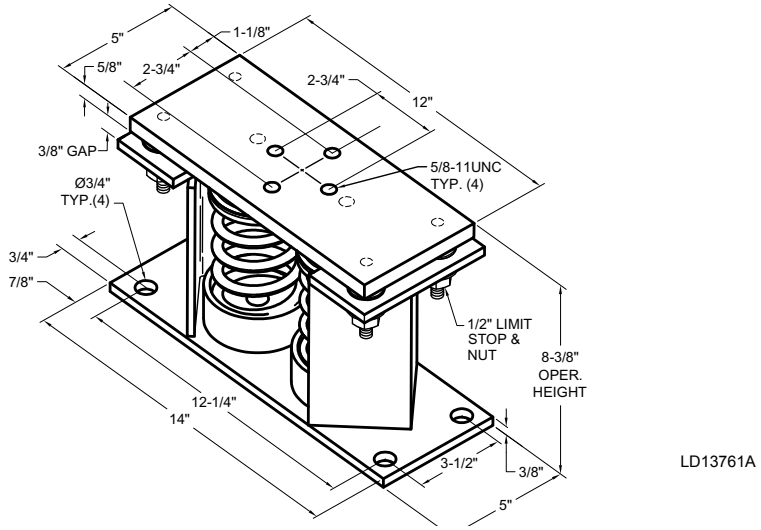


1. All dimensions are in inches, interpret per ANSI Y14.
2. Standard finish: housing-powder coated (color, black), spring-powder coated (color, see table below) hardware - zinc-electroplate.
3. Equipment must be bolted or welded to the top plate to meet allowable seismic ratings.
4. All springs are designed for 50% overload capacity with exception of the 2D-3280N and 2D-2870.
5. *Refer to next page for installation instructions.*
6. Consult factory for concrete installation.

5

**MODEL Y2RSI-2D SEISMICALLY RESTRAINED VIBRATION ISOLATOR FOR 2” DEFLECTION**

| SEISMIC MOUNT SIZE | RATED LOAD (LBS) | RATED DEFLECTION (IN) | SPRING RATE (LBS/IN) | SOLID LOAD (LBS) | COLOR CODE | ALLOWABLE G RATING HORIZONTAL |
|---|---|---|---|---|---|---|
| **Y2RSI-2D-150** | 150 | 2.4 | 62 | 234 | WHITE | 34.7 |
| **Y2RSI-2D-320** | 320 | 2.3 | 140 | 490 | YELLOW | 16.3 |
| **Y2RSI-2D-460** | 460 | 2.3 | 200 | 688 | GREEN | 11.3 |
| **Y2RSI-2D-710** | 710 | 2.2 | 330 | 1072 | DK BROWN | 7.3 |
| **Y2RSI-2D-870** | 870 | 1.9 | 460 | 1312 | RED | 6 |
| **Y2RSI-2D-1200N** | 1200 | 1.9 | 638 | 1818 | RED/BLACK | 4.3 |
| **Y2RSI-2D-1450** | 1450 | 1.8 | 900 | 2450 | TAN | 3.6 |
| **Y2RSI-2D-1690** | 1690 | 1.7 | 1140 | 2892 | PINK | 3.1 |
| **Y2RSI-2D-2000N** | 2000 | 1.7 | 1318 | 3342 | PINK/BLACK | 2.6 |
| **Y2RSI-2D-2640N** | 2640 | 1.5 | 1854 | 4283 | PINK/GRAY | 2 |
| **Y2RSI-2D-2870N** | 3080 | 1.5 | 2004 | 4629 | PINK/GRAY/ ORANGE | 1.7 |
| **Y2RSI-2D-3280N** | 3740 | 1.8 | 2134 | 4930 | PINK/GRAY/DK BROWN | 1.4 |

# 2” DEFLECTION ISOLATOR INSTALLATION AND ADJUSTMENT

1. Read instructions in their entirety before beginning installation.
2. Isolators are shipped fully assembled and are to be positioned in accordance with the submittal drawings or as otherwise recommended.
3. Set isolators on floor, housekeeping pad, or subbase, ensuring that all isolator centerlines match the equipment mounting holes. The VMC group recommends that the isolator base plates (“B”) be installed on a level surface. Shim or grout as required, leveling all isolator base plates to the same elevation (1/4-inch maximum difference can be tolerated).
4. Bolt or anchor all isolators to supporting structure utilizing base plate thru holes (“C”) or weld base plate to supporting structure with 3/8 fillet weld 2" long @ 4" on center around entire base plate or as engineered for specific load and or field conditions.
5. Isolators are shipped to the job site with (2) removable spacer shims (“E”) between the top plate and the housing. These shims must be in place when the equipment is positioned over the isolators.
6. With all shims (“E”) in place, position equipment on top of plate (“A”) of isolator. Bolt equipment securely to top plate of isolator using a minimum of (2) 5/8 UNC A325 grade 5 SAE bolts or weld equipment or bracket to the top plate (“A”) of isolator with a minimum of 3/8 fillet welds 2" long @ 3" on center for a minimum total weld of 10". (All sides of equipment or bracket resting on top plate (“A”) must be welded).
7. The adjustment process can only begin after the equipment or machine is at its full operating weight.
8. Back off each of the (4) limit stop lock nuts (“F”) on isolators 1/2".
9. Adjust each isolator in sequence by turning spring adjusting nuts (“G”) one full clockwise turn at a time. Repeat this procedure on all isolators, one at a time. Check the limit stop lock nuts (“F”) periodically to ensure that clearance between the washer and rubber grommet is maintained. Stop adjustment of isolator only when the top plate (“A”) has risen just above the shim (“E”).
10. Remove all spacer shims (“E”).
11. Fine adjust isolators to level equipment.
12. Adjust all limit stop lock nuts (“F”) per isolator, maintaining a 1/4 to 3/8-inch gap. The limit stop nuts must be kept at this gap to ensure uniform bolt loading during uplift (as the case when equipment is drained).
13. Installation is complete.

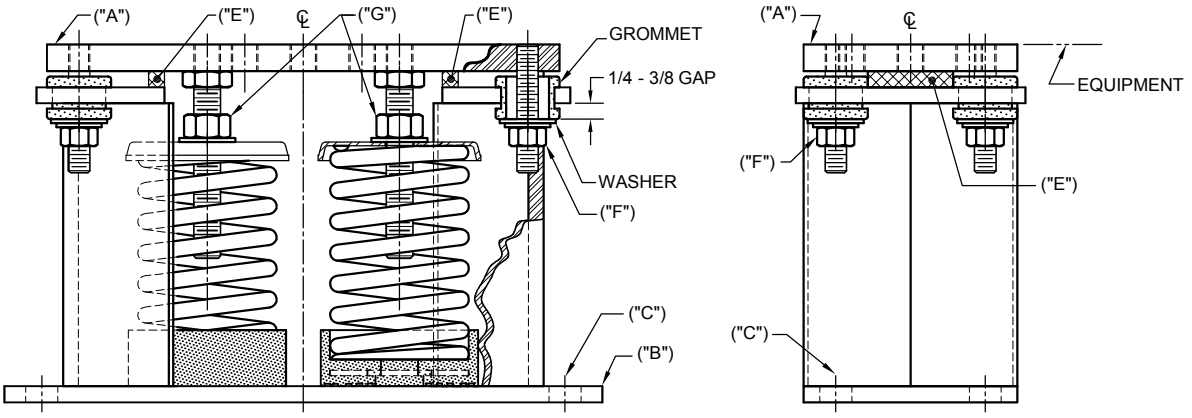


LD13763B

# NEOPRENE ISOLATOR CROSS-REFERENCE

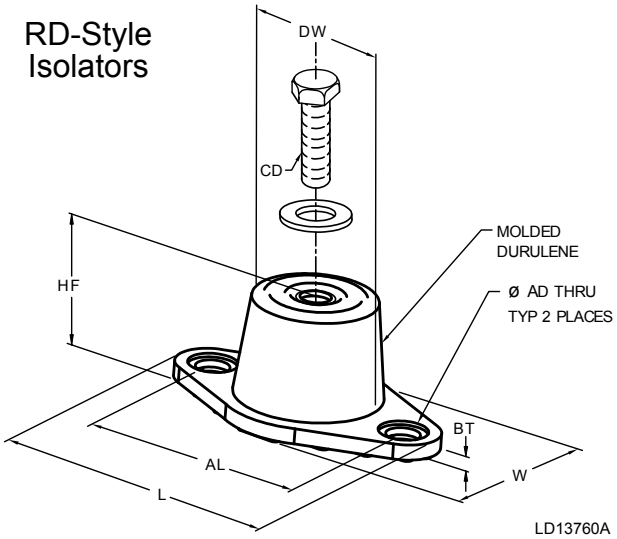


1. All dimensions are inches, interpreted per ANSI Y14.
2. *Refer to next page for installation instructions.*
3. Mount molded in weather resistant duralene compound as standard. Also available in other materials such as natural rubber, extreme high temperature silicone, high-damped silicone, nitrile and EDPM.
4. AL = Mounting hole center to center spacing.
5. HF = Free height of mount, prior to loading. Operating height calculated by the free height less the static deflection under load. All dimensions for reference only.
6. Hardware zinc-electroplated.

| MOUNT TYPE | DIMENSION DATA (INCHES) | | | | | | | |
|---|---|---|---|---|---|---|---|---|
| | L | W | HF | AL | AD | BT | CD | DW |
| RD1-WR | 3.13 | 1.75 | 1.25 | 2.38 | 0.34 | 0.19 | 5/16-18 UNC X 3/4 | 1.25 |
| RD2-WR | 3.88 | 2.38 | 1.75 | 3.00 | 0.34 | 0.22 | 3/8-16 UNC X 1 | 1.75 |
| RD3-WR | 5.50 | 3.38 | 2.88 | 4.13 | 0.56 | 0.25 | 1/2-13 UNC X 1 | 2.50 |
| RD4-WR | 6.25 | 4.63 | 2.75 | 5.00 | 0.56 | 0.38 | 1/2-13 UNC X 1 | 3.00 |

| MODEL NUMBER | RATED CAPACITY (LBS) | RATED DEFLECTION (IN) | DURO (± 5) |
|---|---|---|---|
| RD2-LIGHT BLUE-WR | 35 | 0.4 | 30 |
| RD2-BROWN-WR | 45 | 0.4 | 40 |
| RD2-BRICK RED-WR | 70 | 0.4 | 50 |
| RD 2-LIME-WR | 120 | 0.4 | 60 |

| MODEL NUMBER | RATED CAPACITY (LBS) | RATED DEFLECTION (IN) | DURO (± 5) |
|---|---|---|---|
| RD3-Brown-WR | 250 | 0.5 | 40 |
| RD3-Brick Red-WR | 525 | 0.5 | 50 |
| RD3-Lime-WR | 750 | 0.5 | 60 |
| RD3 Charcoal-WR | 1100 | 0.5 | 70 |

| MODEL NUMBER | RATED CAPACITY (LBS) | RATED DEFLECTION (IN) | DURO (± 5) |
|---|---|---|---|
| RD2-LIGHT BLUE-WR | 135 | 0.5 | 30 |
| RD2-BROWN-WR | 170 | 0.5 | 40 |
| RD2-BRICK RED-WR | 240 | 0.5 | 50 |
| RD 2-LIME-WR | 380 | 0.5 | 60 |
| RD2 CHARCOAL-WR | 550 | 0.5 | 70 |

| MODEL NUMBER | RATED CAPACITY (LBS) | RATED DEFLECTION (IN) | DURO (± 5) |
|---|---|---|---|
| RD4-BROWN-WR | 1500 | 0.5 | 40 |
| RD4-BRICK RED-WR | 2250 | 0.5 | 50 |
| RD4-LIME-WR | 3000 | 0.5 | 60 |
| RD4 CHARCOAL-WR | 4000 | 0.5 | 70 |

# INSTALLATION OF NEOPRENE VIBRATION ISOLATORS

1. Read instructions in their entirety before beginning installation.
2. Isolators are shipped fully assembled and are to be positioned in accordance with the submittal drawings or as otherwise recommended.
3. Set isolators on floor, housekeeping pad, or subbase, ensuring that all isolator centerlines match the equipment mounting holes. The VMC group recommends that the isolator base (“A”) be installed on a level surface. Shim or grout as required, leveling all isolator bases to the same elevation (1/32-inch maximum difference can be tolerated).
4. Bolt or anchor all isolators to supporting structure utilizing base thru holes (“B”).
5. Remove top bolt and top washer. Place equipment on top of isolators so that mounting holes in equipment or base line up with threaded hole (“C”).
6. Reinstall top bolt and washer and tighten down.
7. Installation is complete.

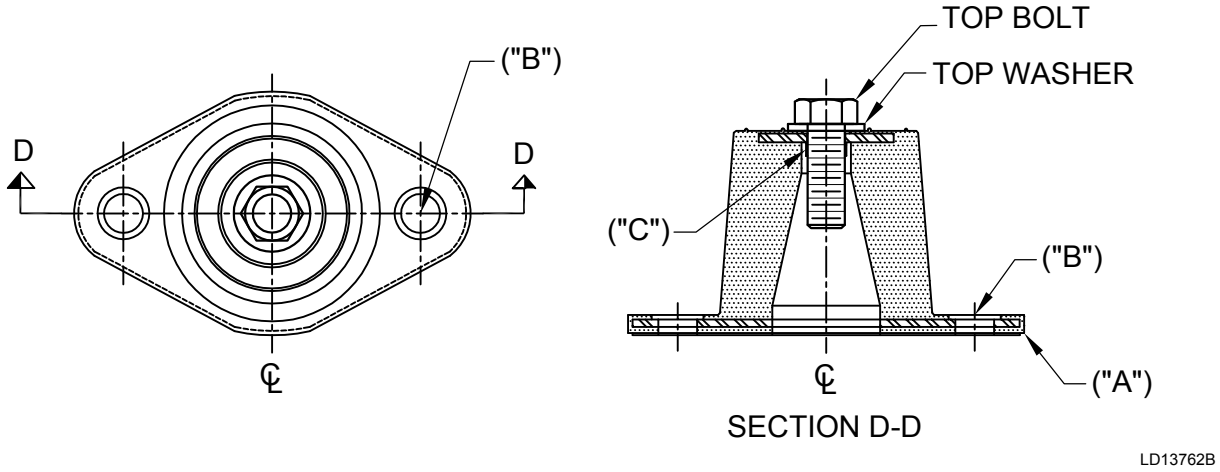

# SECTION 6 – COMMISSIONING

CAUTION

***Commissioning of this unit should only be carried out by Johnson Controls Authorized personnel.***

Commissioning personnel should be thoroughly familiar with the information contained in this literature, in addition to this section.

Perform the commissioning using the detailed checks outlined. Refer to *Equipment Pre-Startup And Startup Checklist (Form 150.72-CL1)* as the commissioning procedure is carried out.

## PREPARATION – POWER OFF

The following basic checks should be made with the customer power to the unit switched OFF.

### Inspection

Inspect unit for installation damage. If found, take action and/or repair as appropriate.

### Refrigerant Charge

Packaged units are normally shipped as standard with a full refrigerant operating charge. Check that refrigerant pressure is present in both systems and that no leaks are apparent. If no pressure is present, a leak test must be undertaken, the leak(s) located and repaired. Remote systems and units are supplied with a nitrogen holding charge. These systems must be evacuated with a suitable vacuum pump/recovery unit as appropriate to below 500 microns.

Do not liquid charge with static water in the cooler. Care must also be taken to liquid charge slowly to avoid excessive thermal stress at the charging point. Once the vacuum is broken, charge into the condenser coils with the full operating charge as given in *SECTION 5 – TECHNICAL DATA*.

### Service and Oil Line Valves

Open each compressor suction, economizer, and discharge service valve. If valves are of the back-seat type, open them fully (counterclockwise) then close one turn of the stem to ensure operating pressure is fed to pressure transducers. Open the liquid line service valve and oil return line ball valve fully in each system.

### Compressor Oil

To add oil to a circuit – connect a Johnson Controls hand oil pump (Part No. 470-10654-000) to the 1/4” oil charging connection on the compressors with a length of clean hose or copper line, but do not tighten the flare nut. Using clean oil of the correct type (“V” oil), pump oil until all air has been purged from the hose then tighten the nut. Stroke the oil pump to add oil to the oil system. Approximately 1.8 to 2.3 gallons is present in the each refrigerant system. Oil levels in the oil equalizing line sight glass should be between the bottom and the middle of the sight glass with the system OFF. High oil levels may cause excessive oil carryover in the system. High oil concentration in the system may cause nuisance trips resulting from incorrect readings on the level sensor and temperature sensors. Temperature sensor errors may result in poor liquid control and resultant liquid overfeed and subsequent damage to the compressor. While running, a visible sign of oil splashing in the sight glass is normal.

### Fans

Check that all fans are free to rotate and are not damaged. Ensure blades are at the same height when rotated. Ensure fan guards are securely fixed.

### Isolation / Protection

Verify all sources of electrical supply to the unit are taken from a single point of isolation. Check that the maximum recommended fuse sizes given in *SECTION 5 – TECHNICAL DATA* has not been exceeded.

### Control Panel

Check the panel to see that it is free of foreign materials (wire, metal chips, etc.) and clean out if required.

### Power Connections

Check that the customer power cables are connected correctly to the terminal blocks or optional circuit breaker. Ensure that connections of power cables within the panels to the circuit breaker or terminal blocks are tight.

### Grounding

Verify that the unit’s protective ground terminal(s) are properly connected to a suitable grounding point. Ensure that all unit internal ground connections are tight.

### Supply Voltage

Verify that the site voltage supply corresponds to the unit requirement and is within the limits given in *SECTION 5 – TECHNICAL DATA*.

### Water System

Verify the chilled liquid system has been installed correctly, and has been commissioned with the correct direction of water flow through the cooler. The inlet should be at the refrigerant piping connection end of the cooler. Purge air from the top of the cooler using the plugged air vent mounted on the extension pipe.

Flow rates and pressure drops must be within the limits given in *SECTION 5 – TECHNICAL DATA*. Operation outside of these limits is undesirable and could cause damage.

If mains power must be switched OFF for extended maintenance or an extended shutdown period, the compressor suction, discharge and economizer service stop valves should be closed (clockwise). If there is a possibility of liquid freezing due to low ambient temperatures, the coolers should be drained or power should be applied to the chiller. This will allow the cooler heater to protect the cooler from freezing down to –20 °F. Before placing the unit back in service, valves should be opened and power must be switched ON (if power is removed for more than 8 hours) for at least 8 hours (24 hours if ambient temperature is below 86 °F [30 °C]) before the unit is restarted.

### Flow Switch

Verify a chilled water flow switch is correctly fitted in the customer's piping on the cooler outlet, and wired into the control panel correctly using shielded cable.

There should be a straight run of at least 5 pipe diameters on either side of the flow switch. The flow switch should be connected to terminals 13 and 14 of XTBC1 on the panel.

### Temperature Sensor(s)

Ensure the leaving liquid temperature sensor is coated with heat conductive compound (Part No. 013-00890-000) and is inserted to the bottom of the water outlet sensor well in the cooler. This sensor also provides some freeze protection and must always be fully inserted in the water outlet sensor well.

## PREPARATION – POWER ON

CAUTION

***Perform the commissioning using the detailed checks outlined. Refer to Equipment Pre-Startup And Startup Checklist (Form 150.72-CL1) as the commissioning procedure is carried out.***

Apply power to the chiller. Turn on the option panel circuit breaker if supplied.

WARNING

***The machine is now live!***

### Switch Settings

Assure the chiller OFF/ON UNIT switch at the bottom of the keypad is OFF. Place the optional circuit breaker handle on the panel door to ON. The customer's disconnection devices can now be set to ON.

Verify the control panel display is illuminated. Assure the system switches under the SYSTEM SWITCHES key are in the OFF position.

### Compressor Heaters

Verify the compressor heaters are energized. If the ambient temperature is above 96 °F (36 °C) the compressor heaters must be on for at least 8 hours before startup to ensure all refrigerant liquid is driven out of the compressor and the oil. If the ambient temperature is below 86 °F (30 °C), allow 24 hours.

Supersedes: 150.72-CL1 (812)

Form 150.72-CL1 (1112)

YORK BY JOHNSON CONTROLS

**MODEL - YLAA**

## INSTALLATION CHECKLIST AND REQUEST FOR AUTHORIZED STARTUP ENGINEER

CUSTOMER: _____ JOB NAME: _____

ADDRESS: _____ LOCATION: _____

PHONE: _____ CUSTOMER ORDER NO: _____

JCI TEL NO: _____ JCI ORDER NO: _____ JCI CONTRACT NO: _____

**CHILLER MODEL NO**: _____ **UNIT SERIAL NO**: _____

**The work (as checked below) is in process and will be completed by:** _____ / _____ / _____
Month Day Year

**The following work must be completed in accordance with installation instructions:**

### A. PRE-STARTUP

**Unit Checks (No Power)**

The following basic checks should be made with the customer power to the unit switched OFF.

1. Inspect the unit for shipping or installation damage ..... ☐
2. Assure that all piping has been completed. ..... ☐
3. Visually check for refrigerant piping leaks ..... ☐
4. Open suction line ball valve, discharge line ball valve, and liquid line valve for each system..... ☐
5. The compressor oil level should be maintained so that an oil level is visible or splashing in the sight glass when fully loaded. At shutdown, the oil level should be between the bottom and middle of the oil equalizing sight glass. ..... ☐
6. Assure water pumps are ON. Check and adjust water pump flow rate and presure drop across the cooler (see "Operational Limitations" (English)). Verify flow switch operation..... ☐

   **NOTE:** Excessive flow may cause catastrophic damage to the heat exchanger (evaporator)
7. Check the control panel to ensure it is free of foreign material (wires, metal chips etc.) ..... ☐
8. Visually inspect wiring (power and control) Wiring MUST meet N.E.C. and local codes. ..... ☐
9. Check tightness of power wiring inside the power panel on both sides of the motor contactors and overloads..... ☐
10. Check for proper size fuses in main and control circuits, and verify overload setting corresponds with RLA and FLA values in electrical tables (see Table 8 and Table) ..... ☐
11. Assure 120VAC Control Power to TB1 has 15 amp minimum capacity..... ☐
12. Be certain all water temp sensors are inserted completely in their respective wells and are coated with heat conductive compound..... ☐
13. Assure that evaporator TXV bulbs are strapped onto the suction lines at 4 or 8 o'clock positions or suction temp. sensors if EEVs are installed. .. ☐

### B. COMPRESSOR HEATER
**(Power On - 24 Hours Prior To Start)**

Apply 120VAC and verifiy its value between Terminals 5 and 2 of XTBC2. The voltage should be 120VAC plus or minus 10% ..... ☐

**NOTE:** Power must be applied 24 hours prior to start-up. Each heater should draw approximately 0.5 to 1A.

### C. STARTUP

**Panel checks (Power On - Both unit switch Off)**

1. Apply 3-phase power and verify its value. Voltage imbalance should be no more than 2% of the average voltage. ..... ☐
2. Apply 120VAC and verify its value on the terminal block in the Power Panel. Make the measurement between Terminals 5 and 2 of XTBC2. The voltage should be 120VAC plus or minus 10% ..... ☐
3. Program/verify the Cooling Setpoints, Program Setpoints, and unit Options. Record the values in the following table (see "SETPOINTS KEYS" and "UNIT KEYS" in Section 7 of Form 150.72-ICOM6 for programming instruction). ..... ☐
4. Put the unit into Service Mode (see "SERVICE MODE" in Section 9 of Form 150.72-ICOM6) and cycle each condenser fan to ensure proper rotation. ..... ☐

6

SETPOINTS ENTRY LIST

| OPTIONS | |
|---|---|
| Display Language | |
| Sys 1 Switch | |
| Sys 2 Switch | |
| Chilled Liquid | |
| Ambient Control* | |
| Local/Remote Mode | |
| Control Mode | |
| Display Units | |
| Lead/Lag Control* | |
| Fan Control* | |
| Manual Override | |
| Current Feedback | |
| Soft Start** | |
| Unit Type** | |
| Refrigerant Type** | |
| Expansion Valve Type** | |
| **COOLING SETPOINTS** | |
| Cooling Setpoint | |
| Range | |
| EMS-PWM Max. Setpoint | |
| **PROGRAM** | |
| Discharge Pressure Cutout | |
| Suct. Pressure Cutout | |
| Low Amb. Temp. Cutout | |
| Leaving Liquid Temp. Cutout | |
| Anti-Recycle Time | |
| Fan Control ON Pressure | |
| Fan Differential OFF Pressure | |
| Total # of Compressors | |
| Number of Fans/System* | |
| Unit/Sys Voltage* | |
| Unit ID | |

*Not on All Models **Viewable Only

5. Prior to this step, turn system 2 OFF (if applicable –refer to Option 2 under "UNIT KEYS" on page 2 for more information on system switches). Connect a manifold gauge to system 1 suction and discharge service valves. ..... ☐

   Place the Unit Switch in the control panel to the ON position.

   **NOTE:** The chilled liquid setpoint may need to be temporarily lowered to ensure all compressors cycle ON.

   As each compressor cycles ON, ensure that the discharge pressure rises and the suction pressure decreases. If this does not occur, the compressor being tested is operating in the reverse direction and must be corrected. After verifying proper compressor rotation, turn the Unit Switch to "OFF."

   **NOTE:** This unit uses scroll compressors which can only operate in one direction. Failure to observe this will lead to compressor failure.

6. Turn system 1 OFF and system 2 ON (refer to "Option 2 – System Switches (two system units only)" under "UNIT KEYS" for more information on system switches)). ..... ☐

   Place the Unit Switch in the control panel to the ON position.

   **NOTE:** The chilled liquid setpoint may need to be temporarily lowered to ensure all compressors cycle ON.

   As each compressor cycles ON, ensure that the discharge pressure rises and the suction pressure decreases. If this does not occur, the compressor being tested is operating in the reverse direction and must be corrected. After verifying proper co pressor rotation, turn the Unit Switch to OFF.

## D. CHECKING SUPERHEAT AND SUBCOOLING

The subcooling temperature of each system can be calculated by recording the temperature of the liquid line at the outlet of the condenser and subtracting it from the liquid line saturation temperature at the liquid stop valve (liquid line saturation temp. is converted from a temperature/pressure chart).

Example:

| | |
|---|---|
| Liquid line pressure = 325 PSIG converted to temp. | 101 °F |
| minus liquid line temp. | - 83 °F |
| Subcooling = | 18 °F |

The subcooling should be adjusted to 18 °F (-8 °C) at design conditions.

1. Record the liquid line pressure and its corresponding temperature, liquid line temperature and subcooling below: ..... ☐

| | SYS 1 | SYS 2 | |
|---|---|---|---|
| Liq Line Press = | _____ | _____ | PSIG |
| Saturated Temp = | _____ | _____ | °F |
| Liq Line Temp = | _____ | _____ | °F |
| Subcooling = | _____ | _____ | °F |

After the subcooling is verified, the suction superheatshould be checked. The superheat should be checked only after steady state operation of the chiller has been established, the leaving water temperature has been pulled down to the required leaving water temperature, and the unit is running in a fully loaded condition. Correct superheat setting for a system is 10 °F to 15 °F (5.56 °C to 8.33 °C) 18" (46 cm) from the heat exchanger.

**Superheat should typically be set for no less than 10 °F with only a single compressor running on a circuit.** The superheat is calculated as the difference between the actual temperature of the returned refrigerant gas in the suction line

entering the compressor and the temperature corresponding to the suction pressure as shown in a standard pressure/temperature chart.

Example:

| | |
|---|---|
| Suction Temp = | 46 °F |
| minus Suction Press 105 PSIG converted to Temp | - 34 °F |
| Superheat = | 12 °F |

When adjusting the expansion valve (TXV only), the adjusting screw should be turned not more than one turn at a time, allowing sufficient time (approximately 15 minutes) between adjustments for the system and the thermal expansion valve to respond and stabilize.

Assure that superheat is set at a minimum of 10 °F (5.56 °C) with a single compressor running on each circuit.

2. Record the suction temperature, suction pressure, suction saturation temperature, and superheat of each system below: ..... ☐

| | SYS 1 | SYS 2 | |
|---|---|---|---|
| Suction Temp = | _____ | _____ | °F |
| Suction Pressure = | _____ | _____ | PSIG |
| Saturation Temp = | _____ | _____ | °F |
| Superheat = | _____ | _____ | °F |

**E. Leak Checking**

Leak check compressors, fittings, and piping to ensure no leaks. ..... ☐

If the unit is functioning satisfactorily during the initial operating period, no safeties trip and the compressors cycle to control water temperature to setpoint, the chiller is ready to be placed into operation.

**Owner's operating personnel:**

Name: _____

Phone Number: _____

Name: _____

Phone Number: _____

Name: _____

Phone Number: _____

6

## CONTRACTOR'S RESPONSIBILITIES AND INSTRUCTIONS TO USE FORM

This installation checklist provides a quick way to check if all necessary installation work was completed in accordance with all applicable installation instructions in Form 150.72-ICOM6, and when completed, acts as a request for Johnson Controls to furnish start-up supervision.

Complete this form as follows:

1. Fill out the top of the page.
2. Check off each item as required. Cross out (x) items that do not apply.
3. Enter names, initials, and date of the operating personnel who completed the checklist.
4. **Bottom of Form:** Enter the date that the Johnson Controls start-up technician should be at the job site and the name(s) of the supervisor(s) to be contacted.
5. Retain one copy in files and send one copy to customer.

---

With reference to the terms of the above contract, we are requesting the presence of your JCI Authorized Representative at the job site on

_____ / _____ / _____ to start the system and instruct operating personnel. Have the JCI representative contact: _____
Month Day Year Name/Phone

We understand that the services of the Johnson Controls Authorized Representative will be furnished in accordance with the contract for a period of time of not more than _____ consecutive normal working hours, and we agree that a charge of _____ per diem plus travel expenses will be made to Johnson Controls if services are required for longer than _____ consecutive normal hours or if repeated calls are required, through no fault of Johnson Controls.

**Customer/Contractor Signature:** _____

**Title:** _____

**Form Completed by:** _____

Johnson Controls

THIS PAGE INTENTIONALLY LEFT BLANK

# SECTION 7 – UNIT CONTROLS

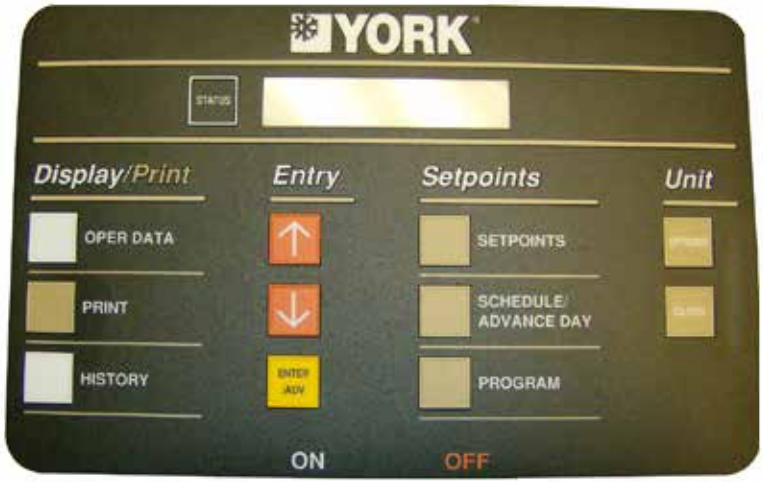


LD13283

## INTRODUCTION

The YORK Control Center is a microprocessor based control system designed to provide the entire control for the liquid chiller. The control logic embedded in the microprocessor based control system will provide control for the chilled liquid temperatures, as well as sequencing, system safeties, displaying status, and daily schedules. The MicroComputer Control Center consists of four basic components:

1. IPU II and I/O Boards
2. Transformer
3. Display
4. Keypad

The keypad allows programming and accessing setpoints, pressures, temperatures, cutouts, daily schedule, options, and fault information.

Remote cycling, demand limiting and chilled liquid temperature reset can be accomplished by field supplied contacts.

Compressor starting/stopping and loading/unloading decisions are performed by the Microprocessor to maintain leaving or return chilled liquid temperature. These decisions are a function of temperature deviation from setpoint.

A Master ON/OFF switch activates or deactivates the unit.

## IPU II AND I/O BOARDS

The IPU and I/O boards are assembled to function as a single microprocessor controller. The IPU II board contains a microprocessor and is the controller. The I/O board handles all of the chiller I/O (Inputs and Outputs). System inputs from pressure transducers and temperature sensors are connected to the I/O board.

The I/O board constantly scans inputs to monitor the chiller operating conditions. The input values are transmitted the IPU II microprocessor board. From this information, the IPU II then issues commands to the I/O board relay outputs to control contactors, solenoids, etc. for Chilled Liquid Temperature Control and to react to safety conditions. The I/O board converts logic signals to operate relay outputs to 115VAC levels used by motor contactors, fan contactors, solenoid valves, etc. to control system operation. The low voltage side of all relay coils on the I/O board are powered by +12V.

Keypad commands are actuated upon by the microprocessor to change setpoints, cutouts, scheduling, operating requirements, and to provide displays. The keypad and display are connected to the I/O board.

The on-board power supply converts 24VAC from 75VA, 120/24VAC 50/60Hz UL listed class 2 power transformer to +12V, +5V and +3.3V using switching and linear voltage regulators located on the I/O and IPU II boards. These voltages are used to operate integrated circuitry on the board. The 40 character display and unit sensors (transducers and temp sensors) are sup-

plied power for the micro board +5V supply. 24VAC is rectified, but not regulated, to provide unregulated +30VDC to supply all of the digital inputs.

The I/O board contains one green "Power" LED to indicate that the board is powered up and one red "Status" LED to indicate by blinking that the processor is operating. The I/O board also contains two sets of Receiver/Transmit LED's, one for each available serial communication port. The receive LED's are green, and the Transmit LED's are red.

A jumper on the I/O board selects 4 to 20mA or 0 to 10VDC as the input type on the remote temperature reset analog input.

## TRANSFORMER

A 75VA, 120/240VAC, 50/60Hz transformer is provided to supply power to the Microprocessor Board, which in turn rectifies, filters, and regulates as necessary to supply power to the display, sensors, and transducers.

## DISPLAY

The 40 Character Display (2 lines of 20 characters) is a liquid crystal display used for displaying system parameters and operator messages.

When a key is pressed, such as the OPER DATA key, system parameters will be displayed and will remain on the display until another key is pressed. The system parameters can be scrolled with the use of the ↑ (UP) and ↓ (DOWN) arrow keys. The display will update all information at a rate of about 1 a second.

Display Messages may show characters indicating "greater than" (>) or "less than" (<). These characters indicate the actual values are greater than or less than the limit values which are being displayed.

## KEYPAD

The 12 button non-tactile keypad allows the user to retrieve vitals system parameters such as system pressures, temperatures, compressor running times and starts, option information on the chiller, and system setpoints. This data is useful for monitoring chiller operation, diagnosing potential problems, troubleshooting, and commissioning the chiller.

It is essential the user become familiar with the use of the keypad and display. This will allow the user to make full use of the capabilities and diagnostic features available.

## UNIT SWITCH

A unit ON/OFF switch is just underneath the keypad. This switch allows the operator to turn the entire unit OFF if desired. The switch must be placed in the ON position for the chiller to operate.

## BATTERY BACK-UP

The IPU II contains a Real Time Clock integrated circuit chip with an internal battery backup. The purpose of this battery backup is to assure any programmed values (setpoints, clock, cutouts, etc.) are not lost during a power failure regardless of the time involved in a power cut or shutdown period.

## PROGRAMMING # OF COMPRESSORS

The total number of compressors is programmable under the PROGRAM key. Dual (2) system chillers can have 4, 5, or 6 compressors.

# STATUS KEY

00066VIP

## Unit Status

Pressing the STATUS key will enable the operator to determine current chiller operating status. The messages displayed will include running status, cooling demand, fault status, external cycling device status. The display will be a single message relating to the highest priority message as determined by the microprocessor. Status messages fall into the categories of General Status and Fault Status.

The following General, Safety, and Warning messages are displayed when the STATUS key is pressed. Following each displayed message is an explanation pertaining to that particular message.

## General Status Messages

In the case of messages which apply to individual systems, SYS 1 and SYS 2 messages will both be displayed and may be different. In the case of single system units, all SYS 2 messages will be blank.

```
UNIT SWITCH OFF
SHUTDOWN
```

This message informs the operator that the UNIT switch on the control panel is in the OFF position which will not allow the unit to run.

```
REMOTE CONTROLLED
SHUTDOWN
```

The REMOTE CONTROLLED SHUTDOWN message indicates that either an ISN system or RCC has turned the unit OFF, not allowing it to run.

```
DAILY SCHEDULE
SHUTDOWN
```

The DAILY SCHEDULE SHUTDOWN message indicates that the daily/holiday schedule programmed is keeping the unit from running.

```
REMOTE STOP
NO RUN PERM
```

REMOTE STOP NO RUN PERM shows that a remote start/stop contact is open in series with the flow switch. These contacts are connected to Terminals 51 and 13 of XTBC1. A 3-second delay is built into the software to prevent nuisance shutdowns due to erroneous signals on the run permissive input.

```
FLOW SWITCH
OPEN
```

FLOW SWITCH OPEN indicates the flow switch contacts connected to Terminals 13 and 14 of XTBC1 are open. A 3-second delay is built into software to prevent nuisance shutdowns due to erroneous signals from the flow switch.

```
SYS 1 SYS SWITCH OFF
SYS 2 SYS SWITCH OFF
```

SYS SWITCH OFF tells that the system switch under OPTIONS is turned OFF. The system will not be allowed to run until the switch is turned back ON.

```
SYS 1 NO COOL LOAD
SYS 2 NO COOL LOAD
```

This message informs the operator that the chilled liquid temperature is below the point (determined by the setpoint and control range) that the microprocessor will bring on a system or that the microprocessor has not loaded the lead system far enough into the loading sequence to be ready to bring the lag system ON. The lag system will display this message until the loading sequence is ready for the lag system to start.

```
SYS 1 COMPS RUN X
SYS 2 COMPS RUN X
```

The COMPS RUNNING message indicates that the respective system is running due to demand. The "X" will be replaced with the number of compressors in that system that are running.

```
SYS 1 AR TIMER XX S
SYS 2 AR TIMER XX S
```

The anti-recycle timer message shows the amount of time left on the respective systems anti-recycle timer. This message is displayed when the system is unable to start due the anti-recycle timer being active.

```
SYS 1 AC TIMER XX S
SYS 2 AC TIMER XX S
```

The anti-coincidence timer is a software feature that guards against 2 systems starting simultaneously. This assures instantaneous starting current does not become excessively high due to simultaneous starts. The microprocessor limits the time between compressor starts to 1 minute regardless of demand or the anti-recycle timer being timed out. The anti-coincidence timer is only present on two system units.

```
SYS 1 DSCH LIMITING
SYS 2 DSCH LIMITING
```

When this message appears, discharge pressure limiting is in effect. The Discharge Pressure Limiting feature is integral to the standard software control; however the discharge transducer is optional on some models. Therefore, it is important to keep in mind that this control will not function unless the discharge transducer is installed in the system.

The limiting pressure is a factory set limit to keep the system from faulting on the high discharge pressure cutout due to high load or pull down conditions. When the unload point is reached, the microprocessor will automatically unload the affected system by de energizing one compressor. The discharge pressure unload will occur when the discharge pressure gets within 10 PSIG (0.69 barg) of the programmed discharge pressure cutout. This will only happen if the system is fully loaded and will shut only one compressor OFF. If the system is not fully loaded, discharge limiting will not go into effect. Reloading the affected system will occur when the discharge pressure drops to 85% of the unload pressure and 10 minutes have elapsed.

```
SYS 1 SUCT LIMITING
SYS 2 SUCT LIMITING
```

When this message appears, suction pressure limiting is in effect. The suction pressure limit is a control point that limits the loading of a system when the suction pressure drops to within 15% above the suction pressure cutout. On a standard system programmed for 44 PSIG/3.0 Bar suction pressure cutout, the microprocessor would inhibit loading of the affected system with the suction pressure less than or equal to 1.15 * 44 PSIG/3.0 Bar = 50 PSIG/3.5 Bar. The system will be allowed to load after 60 seconds and after the suction pressure rises above the suction pressure load limit point.

```
SYS 1 LOAD LIMIT XX%
SYS 2 LOAD LIMIT XX%
```

This message indicates that load limiting is in effect and the percentage of the limiting in effect. This limiting could be due to the load limit/pwm input, ISN or RCC controller sending a load limit command.

```
MANUAL
OVERRIDE
```

If MANUAL OVERRIDE mode is selected, the STATUS display will display this message. This will indicate that the Daily Schedule is being ignored and the chiller will start-up when chilled liquid temperature allows, Remote Contacts, UNIT switch and SYSTEM switches permitting. This is a priority message and cannot be overridden by anti-recycle messages, fault messages, etc. when in the STATUS display mode. Therefore, do not expect to see any other STATUS messages when in the MANUAL OVERRIDE mode. MANUAL

OVERRIDE is to only be used in emergencies or for servicing. Manual override mode automatically disables itself after 30 minutes.

```
SYS 1 PUMPING DOWN
SYS 2 PUMPING DOWN
```

The PUMPING DOWN message indicates that a compressor in the respective system is presently in the process of pumping the system down. When pumpdown is initiated on shutdown, the liquid line solenoid or EEV will close and a compressor will continue to run. When the suction pressure decreases to the suction pressure cutout setpoint or runs for 180 seconds, whichever comes first, the compressor will cycle OFF.

## Fault Safety Status Messages

Safety Status messages appear when safety thresholds in the unit have been exceeded. Safeties are divided into two categories – system safeties and unit safeties. System safeties are faults that cause the individual system to be shut down. Unit safeties are faults that cause all running compressors to be shut down. Following are display messages and explanations.

### *System Safeties*

System safeties are faults that cause individual systems to be shut down if a safety threshold is exceeded for 3 seconds. They are auto reset faults in that the system will be allowed to restart automatically after the fault condition is no longer present. However, if 3 faults on the same system occur within 90 minutes, that system will be locked out on the last fault. This condition is then a manual reset. The system switch (under OPTIONS key) must be turned OFF and then back on to clear the lockout fault. Fault messages will be displayed whenever a system is locked out.

```
SYS 1 HIGH DSCH PRES
SYS 2 HIGH DSCH PRES
```

The Discharge Pressure Cutout is a software cutout in the microprocessor and is backed-up by a mechanical high pressure cutout switch located in the refrigerant circuit. It assures that the system pressure does not exceed safe working limits. The system will shutdown when the programmable cutout is exceeded and will be allowed to restart when the discharge pressure falls 40 PSIG below the cutout. Discharge transducers must be installed for this function to operate.

```
SYS 1 LOW SUCT PRESS
SYS 2 LOW SUCT PRESS
```

The Suction Pressure Cutout is a software cutout that helps protect the chiller from an evaporator freeze-up should the system attempt to run with a low refrigerant charge or a restriction in the refrigerant circuit.

NOTE

***Repeated starts after resetting a low suction pressure fault will cause evaporator freeze-up. Whenever a system locks out on this safety or any safety, immediate steps should be taken to identify the cause.***

At system start, the cutout is set to 10% of programmed value. During the next 3 minutes the cutout point is ramped up to the programmed cutout point. If at any time during this 3 minutes the suction pressure falls below the ramped cutout point, the system will stop. This cutout is completely ignored for the first 30 seconds of system run time to avoid nuisance shutdowns, especially on units that utilize a low pressure switch in place of the suction pressure transducer.

After the first 3 minutes, if the suction pressure falls below the programmed cutout setting, a “transient protection routine” is activated. This sets the cutout at 10% of the programmed value and ramps up the cutout over the next 30 seconds. If at any time during this 30 seconds the suction pressure falls below the ramped cutout, the system will stop.

```
SYS 1 MP/HPCO FAULT
SYS 2 MP/HPCO FAULT
```

```
SYS 1 MP/HPCO INHIB
SYS 2 MP/HPCO INHIB
```

The Motor Protector/Mechanical High Pressure Cutout protect the compressor motor from overheating or the system from experiencing dangerously high discharge pressure.

This fault condition is present when CR1 (SYS 1) or CR2 (SYS 2) relays de-energize due to the HP switch or motor protector opening. This causes the respective CR contacts to open causing 0VDC to be read on the inputs to the microboard. The fault condition is cleared when a 30VDC signal is restored to the input.

The internal motor protector opens at 185 °F to 248 °F (85 °C to 120 °C) and auto resets. The mechanical HP switch opens at 585 PSIG plus or minus 10 PSIG (27.92 barg plus or minus .69 barg) and closes at 330 PSIG plus or minus 25 PSIG (22.75 barg plus or minus 1.72 barg).

The compressor is also equipped with a discharge temperature sensor for the purpose of sensing internal scroll temperature. This sensor protects the scrolls from overheating due to inadequate cooling that may occur when refrigerant charge is low, or superheat is too high.

When the sensor senses a high temperature, it opens the motor protector circuit in the compressor causing the compressor to shut down.

During the first two faults an MP/HP INHIBIT message will be displayed and the system will not be locked out. Only after the third fault in 90 minutes will the MP/HPCO FAULT message be displayed.

Whenever the motor protector or discharge sensor shuts down a compressor and the system, the internal compressor contacts will open for a period of 30 minutes to assure that the motor or scroll temperatures have time to dissipate the heat and cool down. The MP/HP INHIBIT message will be displayed while these contacts are open or when the HPCO is open. While this message is displayed, the compressors will not be permitted to start.

After 30 minutes, the contacts will close and the system will be permitted to restart. The microprocessor will not try to restart the compressors in a system that shuts down on this safety for a period of 30 minutes to allow the internal compressor to time out.

During the 30 minute timeout, the MP/HPCO INHIB message will be displayed. The MP/HPCO fault will only be displayed after 3 shutdowns in 90 minutes, indicating the system is locked out and will not restart.

```
SYS 1 HIGH MTR CURR
SYS 2 HIGH MTR CURR
```

When the System Current Feedback option is installed and selected (Option 11 under OPTIONS key Current Feedback), this safety will operate as follows. If the actual feedback voltage of the system proportional to currents exceeds the programmed trip voltage for 5 seconds, the system will shutdown.

This safety will shut down a system if either suction temperature or suction pressure sensors read out of range high or low. This condition must be present for 3 seconds to cause a system shutdown. The safety locks out a system after the first fault and will not allow automatic restarting.

### Unit Safeties

Unit safeties are faults that cause all running compressors to be shut down. Unit faults are auto reset faults in that the unit will be allowed to restart automatically after the fault condition is no longer present.

```
UNIT FAULT:
LOW AMBIENT TEMP
```

The Low Ambient Temp Cutout is a safety shutdown designed to protect the chiller from operating in a low ambient condition. If the outdoor ambient temperature falls below the programmable cutout, the chiller will shut down. Restart can occur when temperature rises 2 °F above the cutoff.

```
UNIT FAULT:
LOW LIQUID TEMP
```

The Low Leaving Chilled Liquid Temp Cutout protects the chiller form an evaporator freeze-up should the chilled liquid temperature drop below the freeze point. This situation could occur under low flow conditions or if the micro panel setpoint values are improperly programmed. Anytime the leaving chilled liquid temperature (water or glycol) drops below the cutout point, the chiller will shutdown. Restart can occur when chilled liquid temperature rises 2 °F above the cutout.

```
UNIT FAULT:
115VAC UNDER VOLTAGE
```

The Under Voltage Safety assures that the system is not operated at voltages where malfunction of the microprocessor could result in system damage. When the 115VAC to the micro panel drops below a certain level, a unit fault is initiated to safely shut down the unit. Restart is allowed after the unit is fully powered again and the anti-recycle timers have finished counting down.

```
UNIT FAULT:
HIGH MTR CURR
```

When the CURRENT FEEDBACK ONE PER UNIT option is selected under the OPTIONS key, the unit will shut down when the voltage exceeds the programmed trip voltage for 5 seconds.

The trip voltage is programmed at the factory according to compressor or unit RLA.

Restart will occur after the anti-recycle timer times out.

### Unit Warning

The following messages are not unit safeties and will not be logged to the history buffer. They are unit warnings and will not auto-restart. Operator intervention is required to allow a restart of the chiller.

```
!! LOW BATTERY !!
CHECK PROG/SETP/OPTN
```

The Low Battery Warning can only occur at unit power-up. On micro panel power-up, the RTC battery is checked. If a low battery is found, all programmed setpoints, program values, options, time, schedule, and history buffers will be lost. These values will all be reset to their default values which may not be the desired operating values. Once a faulty battery is detected, the unit will be prevented from running until the PROGRAM key is pressed. Once PROGRAM is pressed the anti-recycle timers will be set to the programmed anti-recycle time to allow the operator time to check setpoints, and if necessary, reprogram programmable values and options.

If a low battery is detected, it should be replaced as soon as possible. The programmed values will all be lost and the unit will be prevented from running on the next power interruption. The RTC/battery (031-02565-000) is located at U5 on the microboard.

```
INCORRECT
UNIT TYPE
```

This indicates the condensing unit jumper is installed between J11-12 and J11-7. This jumper must be removed to operate the chiller.

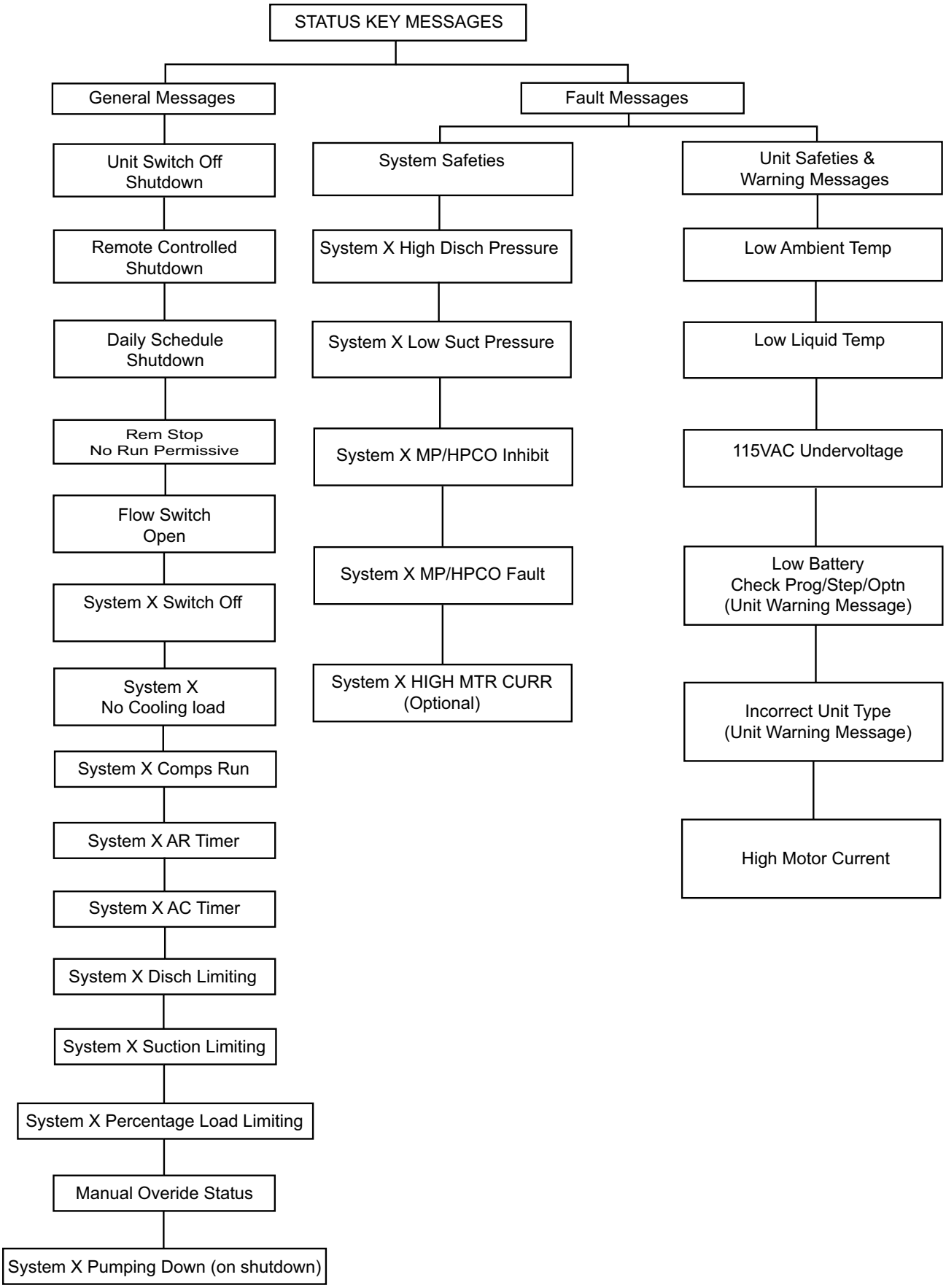


**FIGURE 23 -** STATUS KEY MESSAGES QUICK REFERENCE LIST

# DISPLAY/PRINT KEYS

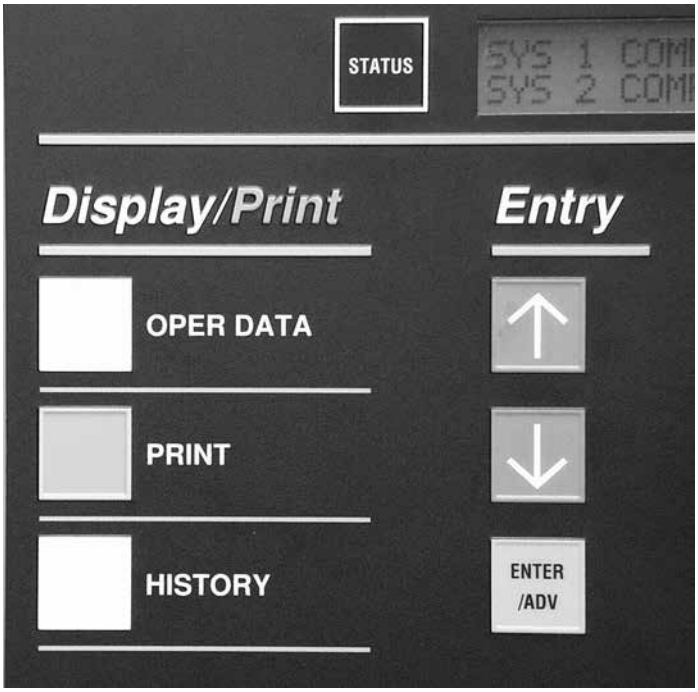


00067VIP

The Display/Print keys allow the user to retrieve system and unit information that is useful for monitoring chiller operation, diagnosing potential problems, troubleshooting, and commissioning the chiller.

System and unit information, unit options, setpoints, and scheduling can also be printed out with the use of a printer. Both real-time and history information are available.

## Oper Data Key

The OPER DATA key gives the user access to unit and system operating parameters. When the OPER DATA key is pressed, system parameters will be displayed and remain on the display until another key is pressed. After pressing the OPER DATA key, the various operating data screens can be scrolled through by using the ↑ (UP) and ↓ (DOWN) arrow keys or the ENTER/ADV key located under the "ENTRY" section.

NOTE

***System 2 information will only be displayed for 2 system units.***

With the "UNIT TYPE" set as a liquid chiller (no jumper from J11-7 to J11-12 on the I/O Board), the following list of operating data screens are viewable under the OPER DATA key in the order that they are displayed. The ↓ (DOWN) arrow key scrolls through the displays in the order they appear below:

NOTE

***The chiller MUST be set to be a liquid chiller (no jumper from J11-7 to J11-12 on the I/O Board). DO NOT operate the chiller if not properly set up.***

```
LCHLT  =  46.2°F
RCHLT  =  57.4°F
```

This display shows chilled leaving and return liquid temperatures. The minimum limit on the display for these parameters are 2.2 °F (-19 °C). The maximum limit on the display is 140 °F (60 °C).

```
AMBIENT AIR TEMP
     = 87.5°F
```

This display shows the ambient air temperature. The minimum limit on the display is 0.4 °F (-17.6 °C). The maximum limit on the display is 131.2 °F (55.1 °C).

```
SYS X SP = 72.1 PSIG
      DP =227.0 PSIG
```

These displays show suction and discharge pressures for each system. The discharge pressure transducer is optional on some models.

If the optional discharge transducer is not installed, the discharge pressure would display 0 PSIG (0 barg).

The minimum limits for the display are:

- Suction Pressure: 0 PSIG (0 barg)
- Discharge Pressure: 0 PSIG (0 barg)

The maximum limits for the display are:

- Suction Pressure: 400 PSIG (27.58 barg)
- Discharge Pressure: 650 PSIG (44.82 barg)

```
SYS X HOURS 1 = XXXXX
      2= XXXXX, 3 = XXXXX
```

```
SYS X STARTS 1 = XXXXX
      2= XXXXX, 3 = XXXXX
```

The above two messages will appear sequentially for each system. The first display shows accumulated running hours of each compressor for the specific system. The second message shows the number of starts for each compressor on each system.

NOTE

***Run times and starts will only be displayed for the actual number of systems and compressors on the unit.***

A total of 99,999 hours and starts can be logged before the counter rolls over to “0”.

```
LOAD TIMER 58 SEC
UNLOAD TIMER 0 SEC
```

This display of the load and unload timers indicate the time in seconds until the unit can load or unload. Whether the systems loads or unloads is determined by how far the actual liquid temperature is from setpoint. A detailed description of unit loading and unloading is covered under the topic of Capacity Control.

```
COOLING DEMAND
2 OF 8 STEPS
```

The display of COOLING DEMAND indicates the current “step” in the capacity control scheme when in Return Water Control Mode. The number of available steps are determined by how many compressors are in the unit. In the above display, the “2” does not mean that two compressor are running but only indicates that the capacity control scheme is on step 2 of 8. Capacity Control is covered in more detail in this publication which provides specific information on compressor staging (for Return Water Control only).

```
TEMP ERROR XXX.X°F
TEMP RATE XXX.X°F/M
```

The COOLING DEMAND message will be replaced with this message when Leaving Chilled liquid control is selected. This message indicates the temperature error and the rate of change of the chilled liquid temperature.

```
LEAD SYSTEM IS
SYSTEM NUMBER 2
```

This display indicates the current LEAD system. In this example system 2 is the LEAD system, making system 1 the LAG system. The LEAD system can be manually selected or automatic. Refer to the programming under the *Options Key on page 123*. The Lead System display will only appear on a two system unit.

NOTE

***A unit utilizing hot gas bypass should be programmed for MANUAL with system 1 as the lead system. Failure to do so will prevent hot gas operation if system 2 switches to the lead system when programmed for AUTOMATIC LEAD/LAG.***

```
EVAPORATOR HEATER
STATUS IS =XXX
```

This display indicates the status of the evaporator heater. The evaporator heater is controlled by ambient air temperature. When the ambient temperature drops below 40 °F the heater is turned ON. When the temperature rises above 45 °F the heater is turned OFF. An under voltage condition will keep the heater OFF until full voltage is restored to the system.

```
EVAPORATOR WATER
PUMP     STATUS     =XXXX
```

The evaporator pump dry contacts are energized when any compressor is running, or the unit is not OFF on the daily schedule and the unit switch is ON, or the unit has shutdown on a Low Leaving Chilled Liquid fault. However, even if one of above is true, the pump will not run if the micro panel has been powered up for less than 30 seconds or if the pump has run in the last 30 seconds to prevent pump motor overheating.

```
EVAP PUMP TOTAL RUN
HOURS            =XXXXX
```

The Evaporator Pump Total Run Hours display indicates the total pump run hours. Total hours continually increments similar to Compressor Run Hours. If dual pumps are fitted, run hours indicates total hours on both pumps.

```
ACTIVE REMOTE CTRL
        NONE
```

There are several types of remote systems that can be used to control or monitor the unit. The following messages indicate the type of remote control mode active:

NONE – no remote control active. Remote monitoring may be via ISN.

ISN – YORK Talk via ISN allows remote load limiting and temperature reset through an ISN system.

LOAD LIM – Load limiting enabled using contact closure.

PWM TEMP – EMS temperature reset

*Refer to *Remote BAS/EMS Temperature Reset Using A Voltage Or Current Signal on page 150*.

If the microprocessor is programmed for CURRENT FEEDBACK ONE PER UNIT under the OPTIONS key, the display will show up as the first display prior to the SYS 1 displays. Total chiller current is displayed as shown below:

```
UNIT   AMPS = 54.0
       VOLTS =  1.2
```

If the microprocessor is programmed for CURRENT FEEDBACK NONE, no current display will appear.

```
SYS X COMP STATUS
1=XXX 2=XXX 3=XXX
```

```
SYS X RUN TIME
XX-XX-XX-XX D-H-M-S
```

```
SYS X LLSV IS ON
HOT GAS SOL IS OFF
```

```
SYS X FAN STAGE 3
```

```
SYS X AMPS = 36.0
      VOLTS =  0.8
```

The preceding five messages will appear sequentially, first for system 1, then for system 2.

The first message indicates the system and the associated compressors which are running.

The second message indicates the system run time in days – hours – minutes – seconds. Please note that this is not accumulated run time but pertains only to the current system cycle.

The third message indicates the system, and whether the liquid line solenoid or EEV pilot solenoid and hot gas solenoid are being turned ON by the microboard. Please note that hot gas is not available for system 2, so there is no message pertaining to the hot gas solenoid when system 2 message is displayed.

The fourth message indicates the stage of condenser fan operation that is active.

See *Standard Condenser Fan Control on page 146* for more information.

The fifth message displays current as sensed by the optional current feedback circuitry. The display reads out in amps along with the DC feedback voltage from the module. Current is calculated by:

$$\frac{225A \times \text{Actual Volts}}{5 \text{ Volts}}$$

Individual displays will be present for each system, if CURRENT FEEDBACK ONE PER SYSTEM is programmed under the OPTIONS key. Combined compressor current for each system is displayed.

## Oper Data Quick Reference List

The following table is a quick reference list for information available under the OPER DATA key.

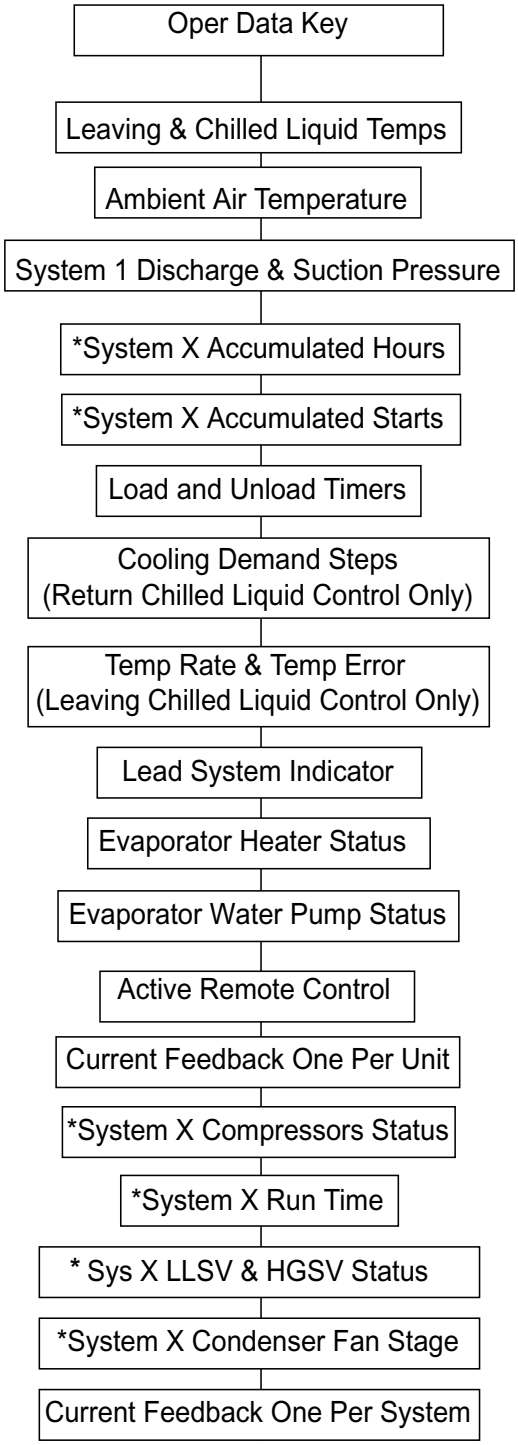


* Block of information repeats for each system

LD12585

**FIGURE 24 -** OPERATION DATA

## Print Key

The PRINT key allows the operator to obtain a printout of real-time system operating data or a history printout of system data at the "instant of the fault" on the last six faults which occurred on the unit. An optional printer is required for the printout.

## Operating Data Printout

Pressing the PRINT key and then OPER DATA key allows the operator to obtain a printout of current system operating parameters. When the OPER DATA key is pressed, a snapshot will be taken of system operating conditions and panel programming selections. This data will be temporarily stored in memory and transmission of this data will begin to the printer. A sample Operating Data printout is shown below. (Note: Not all values are printed for all models.)

```
 YORK INTERNATIONAL CORPORATION
   MILLENNIUM LIQUID CHILLER
          UNIT STATUS
       2:04PM 01 OCT 07
SYS 1            NO COOLING LOAD
SYS 2      COMPRESSORS RUNNING 2
             OPTIONS
CHILLED LIQUID              WATER
AMBIENT CONTROL          STANDARD
LOCAL/REMOTE MODE          REMOTE
CONTROL MODE       LEAVING LIQUID
LEAD/LAG CONTROL        AUTOMATIC
FAN CONTROL      AMB & DSCH PRESS
CURRENT FEEDBACK             NONE
POWER FAILURE RESTART    AUTOMATIC
SOFT START                ENABLED
EXPANSION VALVE      THERMOSTATIC
REMOTE TEMP RESET        4 TO 20 MA
         PROGRAM VALUES
DSCH PRESS CUTOUT        570 PSIG
SUCT PRESS CUTOUT         80 PSIG
SUCT PRESS CUT COOLING    42 PSIG
SUCT PRESS CUT HEATING    31 PSIG
LOW AMBIENT CUTOUT       25.0 DEGF
LEAVING LIQUID CUTOUT    25.0 DEGF
ANTI RECYCLE TIME        600 SECS
FAN CONTROL ON PRESS     425 PSIG
FAN DIFF OFF PRESS       125 PSIG
NUMBER OF COMPRESSORS          6
NUMBER OF FANS PER SYSTEM      4
UNIT TRIP VOLTS              3.0
REFRIGERANT TYPE             R-22
DEFROST INIT TEMP       41.0 DEGF
DEFROST INITIATION TIME     60MIN
DEFROST TERMINATION TIME     3MIN
BIVALENT HEAT DELAY TIME  30 MIN
REMOTE UNIT ID PROGRAMMED      2
YORK HYDRO KIT PUMPS     1 (410a)
PUMP TOTAL RUN HOURS XXXXX (410a)
            UNIT DATA
RETURN LIQUID TEMP       58.2 DEGF
LEAVING LIQUID TEMP      53.0 DEGF
DISCHARGE AIR TEMP       55.3 DEGF
```

```
COOLING RANGE   42.0 +/- 2.0 DEGF
HEATING RANGE  122.0 +/- 2.0 DEGF
SYS 1 SETPOINT     70 +/- 3 PSIG
SYS 2 SETPOINT     70 +/- 3 PSIG
REMOTE SETPOINT        44.0 DEGF
AMBIENT AIR TEMP       74.8 DEGF
LEAD SYSTEM               SYS 2
EVAPORATOR PUMP              ON
EVAPORATOR HEATER           OFF
ACTIVE REMOTE CONTROL      NONE
LAST DEFROST SYS X DURATION XXXS
TIME TO SYS X DEFROST    XX MIN
BIVALENT DELAY REMAINING XX MIN
UNIT  XXX.X AMPS       X.X VOLTS
SOFTWARE VERSION    C.M02.13.00
         SYSTEM 1 DATA
COMP STATUS   1=OFF 2=OFF 3=OFF
RUN TIME     0- 0- 0- 0 D-H-M-S
TIME YYYYYYY 0- 0- 0- 0 D-H-M-S
LAST STATE              YYYYYYY
SUCTION PRESSURE       105 PSIG
DISCHARGE PRESSURE     315 PSIG
SUCTION TEMPERATURE   46.0 DEGF
SAT SUCTION TEMP      34.0 DEGF
SUCTION SUPERHEAT     12.0 DEGF
COOLER INLET REFRIG   31.6 DEGF
DEFROST TEMPERATURE   52.8 DEGF
LIQUID LINE SOLENOID        OFF
MODE SOLENOID               OFF
HOT GAS BYPASS VALVE        OFF
CONDENSER FAN STAGE         OFF
EEV OUTPUT                 0.0 %
SYSTEM     XXX.X AMPS X.X VOLTS
         SYSTEM 2 DATA
COMP STATUS   1=ON, 2=OFF, 3=ON
RUN TIME       0-0-1-46 D-H-M-S
TIME YYYYYYY    0-0-0-0 D-H-M-S
LAST STATE              YYYYYYY
SUCTION PRESSURE       110 PSIG
DISCHARGE PRESSURE     320 PSIG
SUCTION TEMPERATURE   49.3 DEGF
SAT SUCTION TEMP      36.0 DEGF
SUCTION SUPERHEAT     13.3 DEGF
COOLER INLET REFRIG   31.6 DEGF
DEFROST TEMPERATURE   52.8 DEGF
LIQUID LINE SOLENOID         ON
MODE SOLENOID                ON
CONDENSER FAN STAGE           3
EEV OUTPUT                63.2%
SYSTEM    XXX.X AMPS  X.X VOLTS
         DAILY SCHEDULE
S M T W T F S         *=HOLIDAY
SUN  START=00:00AM  STOP=00:00AM
MON  START=00:00AM  STOP=00:00AM
TUE  START=00:00AM  STOP=00:00AM
WED  START=00:00AM  STOP=00:00AM
THU  START=00:00AM  STOP=00:00AM
FRI  START=00:00AM  STOP=00:00AM
SAT  START=00:00AM  STOP=00:00AM
HOL  START=00:00AM  STOP=00:00AM
```

NOTE

***See Optional Printer Installation on page 158 for Printer Installation information.***

## History Printout

Pressing the PRINT key and then the HISTORY key allows the operator to obtain a printout of information relating to the last 9 Safety Shutdowns which occurred. The information is stored at the instant of the fault, regardless of whether the fault caused a lockout to occur. The information is also not affected by power failures (long-term internal memory battery backup is built into the circuit board) or manual resetting of a fault lockout.

When the HISTORY key is pressed, a printout is transmitted of all system operating conditions which were stored at the "instant the fault occurred" for each of the 9 Safety Shutdowns buffers. The printout will begin with the most recent fault which occurred. The most recent fault will always be stored as Safety Shutdown No. 1. identically formatted fault information will then be printed for the remaining safety shutdowns.

Information contained in the Safety Shutdown buffers is very important when attempting to troubleshoot a system problem. This data reflects the system conditions at the instant the fault occurred and often reveals other system conditions which actually caused the safety threshold to be exceeded.

The history printout is similar to the operational data printout shown in the previous section. The differences are in the header and the schedule information. The daily schedule is not printed in a history print.

One example history buffer printout is shown following. The data part of the printout will be exactly the same as the operational data print so it is not repeated here. The difference is that the Daily Schedule is not printed in the history print and the header will be as follows.

```
YORK INTERNATIONAL CORPORATION
MILLENNIUM LIQUID CHILLER
SAFETY SHUTDOWN NUMBER 1
SHUTDOWN @ 3:56PM  29 SEP 07
SYS 1   HIGH DSCH PRESS SHUTDOWN
SYS 2                  NO FAULTS
```

### History Displays

The HISTORY key gives the user access to many unit and system operating parameters at the time of a unit or system safety shutdown. When the HISTORY key is pressed the following message is displayed.

```
DISPLAY SAFETY SHUT-
DOWN NO. 1 (1 TO 9)
```

While this message is displayed, the ↑ (UP) arrow key can be used to select any of the six history buffers. Buffer number 1 is the most recent, and buffer number 6 is the oldest safety shutdown that was saved.

After selecting the shutdown number, pressing the ENTER key displays the following message which shows when the shutdown occurred.

```
SHUTDOWN OCCURRED
03:56 PM 29 JAN 02
```

The ↑ (UP) and ↓ (DOWN) arrow keys are used to scroll forward and backward through the history buffer to display the shutdown conditions stored at the instant the fault occurred. The ↓ (DOWN) arrow key scrolls through the displays in the order they appear below:

```
UNIT FAULT:
LOW LIQUID TEMP
```

Displays the type of fault that occurred.

```
UNIT TYPE
LIQUID CHILLER
```

Displays the type of chiller; Liquid, Condensing Unit or Heat Pump.

```
CHILLED LIQUID
XXXXX
```

Displays the chilled liquid type; Water or Glycol.

```
AMBIENT CONTROL
XXXXXXXXXX
```

Displays the type of Ambient Control; Standard or Low Ambient.

```
LOCAL/REMOTE MODE
XXXXXXXXX
```

Displays Local or Remote control selection.

```
CONTROL MODE
LEAVING LIQUID
```

Displays the type of chilled liquid control; Leaving or Return.

```
LEAD/LAG CONTROL
XXXXXXXX
```

Displays the type of lead/lag control; Manual System 1, Manual System 2 or Automatic. This is only selectable on 2-system chillers.

```
FAN CONTROL
DISCHARGE PRESSURE
```

Displays the type of fan control; Discharge Pressure or Ambient and Discharge Pressure.

```
MANUAL OVERRIDE MODE
XXXXXXXXX
```

Displays whether Manual Override was Enabled or Disabled.

```
CURRENT FEEDBACK
XXXXXXXXXXXXXXXX
```

Displays type of Current Feedback utilized.

```
SOFT START
XXXXXXX
```

Displays whether the optional European Soft Start was installed and selected.

```
DISCHARGE PRESSURE
CUTOUT = XXXX PSIG
```

Displays the programmed Discharge Pressure Cutout.

```
SUCTION PRESSURE
CUTOUT = XXXX PSIG
```

Displays the programmed Suction Pressure Cutout.

```
LOW AMBIENT TEMP
CUTOUT = XXX.X °F
```

Displays the programmed Low Ambient Cutout.

```
LEAVING LIQUID TEMP
CUTOUT = XXX.X °F
```

Displays the Leaving Liquid Temp. Cutout programmed.

```
FAN CONTROL ON
PRESSURE=XXX PSIG
```

Displays the programmed Fan On Pressure.

```
FAN DIFFERENTIAL OFF
PRESSURE=PSIG
```

Displays the programmed Fan Off Differential.

```
SYS1 TRIP VOLTS
= X.X VOLTS
```

Displays the programmed High Current Trip Voltage.

```
SYS2 TRIP VOLTS
= X.X VOLTS
```

Displays the programmed High Current Trip Voltage.

```
YORK HYDRO
KIT PUMPS =X
```

Indicates the Pump Control option is selected.

```
LCHLT = XXX.X °F
RCHLT = XXX.X °F
```

Displays the Leaving and Return chilled Liquid Temperature at the time of the fault.

```
SETPOINT = XXX.X °F
RANGE = +/- °F
```

Displays the programmed Setpoint and Range, if the chiller is programmed for leaving chilled liquid control.

```
SETPOINT = XXX.X °F
RANGE = +XX.X °F
```

Displays the programmed Setpoint and Range, if the chiller is programmed for return chilled liquid control.

```
AMBIENT AIR TEMP
= XXX.X °F
```

Displays the Ambient Temp. at the time of the fault.

```
LEAD SYSTEM IS
SYSTEM NUMBER X
```

Displays which system is in the lead at the time of the fault.

```
EVAPORATOR HEATER
STATUS IS XXX
```

Displays status of the Evaporator Heater at the time of the fault.

```
EVAPORATOR WATER
PUMP STATUS XXXX
```

Displays status of Evaporator Water Pump at the time of fault. Status may read ON, OFF or trip.

```
EVAP PUMP TOTAL RUN
HOURS =XXXX
```

Evap Pump total run hours at the time of fault.

```
ACTIVE REMOTE CTRL
XXXX
```

Displays whether Remote Chiller Control was active when the fault occurred.

```
UNIT ACTUAL AMPS
=XXX.X AMPS
```

This is only displayed when the Current Feedback Option is one per unit.

```
SYS X COMP STATUS
1=XXX 2=XXX 3=XXX
```

Displays which Compressors were running in the system when the fault occurred.

```
SYS X RUN TIME
XX-XX-XX-XX D-H-M-S
```

Displays the system run time when the fault occurred.

```
SYS X SP = XXXX PSIG
DP = XXXX PSIG
```

Displays the system Suction and Discharge Pressure of the time of the fault.

```
SYS X SUCT = XXX.X°F
  SAT SUCT = XXX.X°F
```

Displays the System Suction Temp and Saturated Suction Temp when an EEV is installed.

```
SYS X LLSV IS XXX
HOT GAS SOL IS XXX
```

Displays whether the System Liquid Line Solenoid or Hot Gas Solenoid was energized at the time of the fault.

```
SYS X FAN STAGE XXX
```

Displays the number of Fan Stages in the system active at the time of the fault.

```
SYS X ACTUAL AMPS
     =XXX.X AMPS
```

Displays the system Amperage (calculated approximately) at the time of the fault.

For this message to appear, CURRENT FEEDBACK ONE PER SYSTEM must be programmed under the OPTIONS key. If the microprocessor is programmed as one CURRENT FEEDBACK ONE PER UNIT under the PROGRAM key, the display will be the first display prior to the SYS 1 info. If the microprocessor is programmed for CURRENT FEEDBACK NONE, no current display will appear.

Displays for System 1 starting with SYS X NUMBER OF COMPS RUNNING X through SYS X AMPS = XXX.X VOLTS = X.X will be displayed first, followed by displays for System 2.

Further explanation of the above displays is covered under the STATUS, OPER DATA, COOLING SETPOINTS, PROGRAM, and OPTIONS keys.

### Software Version

The software version may be viewed by first pressing the HISTORY key and then repeatedly pressing the ↓ (DOWN) arrow key until you scroll past the first history buffer choice.

```
DISPLAY SAFETY SHUT-
DOWN NO.1 (1TO6)
```

After the ↓ (DOWN) arrow key is pressed again, the software version will appear.

```
CONTROL        C.MXX.ZZ.YY
 I/O           C.MXX.18.YY
```

# ENTRY KEYS

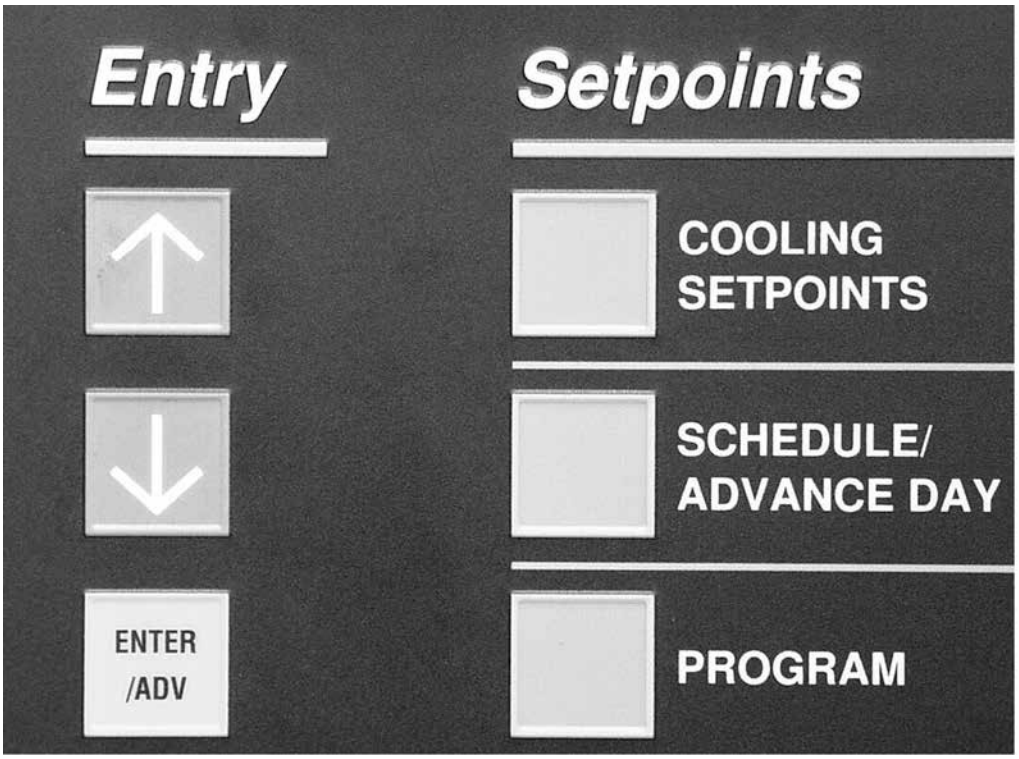


00068VIP



The Entry Keys allows the user to view, change programmed values. The ENTRY keys consist of an ↑ (UP) arrow key, ↓ (DOWN) arrow key, and an ENTER/ADV key.

## Up and Down Arrow Keys

Used in conjunction with the OPER DATA, HISTORY, COOLING SETPOINTS, SCHEDULE/ADVANCE DAY, OPTIONS and CLOCK keys, the ↑ (UP) and ↓(DOWN) arrow keys allow the user to scroll through the various data screens. Refer to *Display/Print Keys on page 107* for specific information on the displayed information and specific use of the ↑ (UP) and ↓ (DOWN) arrow keys.

The ↑ (UP) arrow key, and ↓ (DOWN) arrow key are also used for programming the control panel such as changing numerical or text values when programming cooling setpoints, setting the daily schedule, changing safety setpoints, chiller options, and setting the clock.

## Enter/Adv Key

The ENTER/ADV key must be pushed after any change is made to the cooling setpoints, daily schedule, safety setpoints, chiller options, and the clock. Pressing this key "enters" the new values into memory. If the ENTER/ADV key is not pressed after a value is changed, the changes will not be "entered" and the original values will be used to control the chiller.

Programming and a description on the use of the ↑ (UP) arrow key, and ↓ (DOWN) arrow, and ENTER/ADV keys are covered in detail under the SETPOINTS, and UNIT keys.

# SETPOINTS KEYS

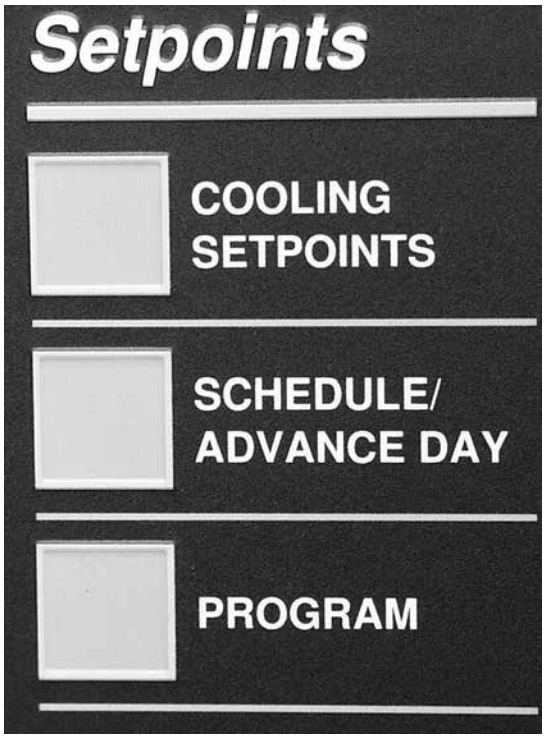


00069VIP

Programming of the cooling setpoints, daily schedule, and safeties is accomplished by using the keys located under the SETPOINTS section.

The three keys involved are labeled COOLING SETPOINTS, SCHEDULE/ADVANCE DAY, and PROGRAM.

Following are instructions for programming the respective setpoints. The same instruction should be used to view the setpoints with the exception that the setpoint will not be changed.

## Cooling Setpoints

The Cooling Setpoint and Range can be programmed by pressing the COOLING SETPOINTS key. The cooling mode (leaving chilled liquid or return chilled liquid) will be displayed for a few seconds, and the setpoint display entry screen will appear.

## Leaving Chilled Liquid Control

```
SETPOINT = 45.0°F
RANGE = +/- 2.0°F
```

The above message shows the current chilled water temperature SETPOINT at 45.0 °F (notice the cursor positioned under the number 0). Pressing either the ↑ (UP) or ↓ (DOWN) arrow will change the setpoint in .5 °F increments. After using the ↑ (UP) or ↓ (DOWN) arrow keys to adjust to the desired setpoint, the ENTER/ADV key must be pressed to enter this number into memory and advance to the RANGE SETPOINT.

Entry of the setpoint will be indicated by the cursor moving under the current RANGE setpoint. The ↑ (UP) and ↓ (DOWN) arrow keys are used to set the RANGE, in .5 °F increments, to the desired RANGE setpoint. After adjusting the setpoint, the ENTER/ADV key must be pressed to enter the data into memory.

Notice that the RANGE was programmed for +/- X.X° F. This indicates the SETPOINT to be in the *center* of

the control range. If the control mode has been programmed for RETURN LIQUID control, the message below would be displayed in place of the previous message.

When in leaving chilled liquid temperature control, the microprocessor will attempt to control the leaving water temperature within the temperature range of the setpoint + or – the range. In the above example, control will be in the range of 43 to 47 °F.

### Return Chilled Liquid Control

```
SETPOINT = 45.0 °F
   RANGE = +10.0 °F
```

In return chilled liquid control, the range no longer has a +/- X.X °F, but only a + X.X °F RANGE setpoint. This indicates that the setpoint is not centered within the RANGE but could be described as the bottom of the control range. A listing of the limits and the programmable values for the COOLING SETPOINTS are shown in *Table 19 on page 143*.

The SETPOINT and RANGE displays just described were based on LOCAL control. If the unit was programmed for REMOTE control (under the OPTIONS key), the above programmed setpoints would have no effect.

When in return chilled liquid temperature control, the microprocessor will turn all compressors OFF at setpoint and will turn compressors ON as return chilled liquid temperature rises. All compressors will be on at setpoint plus the range. If the range equals the temperature drop across the evaporator when fully loaded, the leaving chilled liquid temperature will remain near the setpoint plus or minus a few degrees as the chiller loads and unloads according to return chilled liquid temperature.

Both LEAVING and RETURN control are described in detail under *Capacity Control on page 141*.

### Remote Setpoint Control

Pressing the COOLING SETPOINTS key a second time will display the remote setpoint and cooling range. This display automatically updates about every 2 seconds. Notice that these setpoints are not "locally" programmable, but are controlled by a remote device such as an ISN control, remote reset option board, or remote PWM signal. These setpoints would only be valid if the unit was operating in the REMOTE mode.

The following messages illustrate both leaving chilled liquid control and return chilled liquid control respectively.

```
REM SETP = 44.0 °F
  RANGE = +/-2.0 °F
```

(leaving chilled liquid control)

```
REM SETP = 44.0 °F
    RANGE = +10.0 °F
```

(return chilled liquid control)

The low limit, high limit, and default values for the keys under "SETPOINTS" are listed in *Table 19 on page 143*.

Pressing the COOLING SETPOINTS a third time will bring up the display that allows the Maximum EMS-PWM Temperature Reset to be programmed. This message is shown below.

```
MAX EMS-PWM REMOTE
TEMP RESET = +20 °F
```

The Temp Reset value is the maximum allowable remote reset of the temperature setpoint. The setpoint can be reset upwards by the use of an Energy Management System or from the Temperature Reset Option Board. See *Remote BAS/EMS Temperature Reset Using A Voltage Or Current Signal on page 150* for a detailed explanation of this feature.

As with the other setpoints, the ↑ (Up) arrow and ↓ (Down) arrow keys are used to change the Temp Reset value. After using the ↑ (UP) and ↓ (DOWN) arrows to adjust to the desired setpoint, the ENTER/ADV key must be pressed to enter this number into memory.

## SCHEDULE/ADVANCE DAY KEY

The SCHEDULE is a seven day daily schedule that allows one start/stop time per day. The schedule can be programmed Monday through Sunday with an alternate holiday schedule available. If no start/stop times are programmed, the unit will run on demand, providing the chiller is not shut off on a unit or system shutdown. The daily schedule is considered "not programmed" when the times in the schedule are all zeros (00:00 AM).

To set the schedule, press the SCHEDULE/ADVANCE DAY key. The display will immediately show the following display.

**TABLE 12 -** COOLING SETPOINT, PROGRAMMABLE LIMITS AND DEFAULTS

| SETPOINT KEY | MODE | LOW LIMIT | HIGH LIMIT | DEFAULT |
|---|---|---|---|---|
| LEAVING CHILLED LIQUID SETPOINT | WATER COOLING | 40.0°F<br>4.4°C | **70.0°F<br>21.1°C | 44.0°F<br>6.7°C |
| | GLYCOL COOLING* | 10.0°F<br>-12.2°C | **70.0°F<br>21.1°C | 44.0°F<br>6.7°C |
| LEAVING CHILLED LIQUID CONTROL RANGE | — | 1.5°F<br>0.8°C | 2.5°F<br>1.4°C | 2.0°F<br>1.1°C |
| RETURNED CHILLED LIQUID SETPOINT | WATER COOLING | 40.0°F<br>4.4°C | 70.0°F<br>21.1°C | 44.0°F<br>6.7°C |
| | GLYCOL COOLING* | 10.0°F<br>-12.2°C | 70.0°F<br>21.1°C | 44.0°F<br>6.7°C |
| RETURN CHILLED LIQUID CONTROL RANGE | — | 4.0°F<br>2.2°C | 20.0°F<br>11.1°C | 10.0°F<br>5.6°C |
| MAX EMS-PWM REMOTE TEMPERATURE RESET | — | 2°F<br>1.0°C | 40°F<br>22.0°C | 20°F<br>11.0°C |

* Refer to Engineering Guide for operation below 30°F (-1.1°C). Alternate thermal expansion valves must be used below 30°F (-1.1°C).
*When using glycol, Leaving Chilled Liquid Setpoint should not be set below 20°F (-6.7°C).
**Do not exceed 55°F (12.8°C) setpoint before contacting the nearest Johnson Controls Office for application guidelines.

```
MON  START  =  00:00  AM
       STOP  =  00:00  AM
```

The line under the 0 is the cursor. If the value is wrong, it may be changed by using the ↑ (UP) and ↓ (DOWN) arrow keys until correct. Pressing the ENTER/ADV key will enter the times and then move the cursor to the minute box. The operation is then repeated if necessary. This process may be followed until the hour, minutes, and meridian (AM or PM) of both the START and STOP points are set. After changing the meridian of the stop time, pressing the ENTER/ADV key will advance the schedule to the next day.

NOTE

***Whenever the daily schedule is changed for Monday, all the other days will change to the new Monday schedule. This means if the Monday times are not applicable for the whole week then the exceptional days would need to be reprogrammed to the desired schedule.***

To page to a specific day, press the SCHEDULE/ADVANCE DAY key until the desired day appears. The start and stop time of each day may be programmed differently using the ↑ (UP) and ↓ (DOWN) arrow, and ENTER/ADV keys.

After SUN (Sunday) schedule appears on the display a subsequent press of the SCHEDULE/ADVANCE DAY key will display the Holiday schedule. This is a two part display. The first reads:

```
HOL  START  =  00:00  AM
       STOP  =  00:00  AM
```

The times may be set using the same procedure as described above for the days of the week. After changing the meridian of the stop time, pressing the ENTER/ADV key will advance the schedule to the following display:

```
S _ M T W T F S
HOLIDAY NOTED BY *
```

The line below the empty space next to the S is the cursor and will move to the next empty space when the ENTER/ADV key is pressed. To set the Holiday, the cursor is moved to the space following the day of the week of the holiday and the ↑ (UP) arrow key is pressed. An * will appear in the space signifying that day as a holiday. The * can be removed by pressing the ↓ (DOWN) arrow key.

The Holiday schedule must be programmed weekly – once the Holiday schedule runs, it will revert to the normal daily schedule.

## PROGRAM KEY

There are several operating parameters under the PROGRAM key that are programmable. These setpoints can be changed by pressing the PROGRAM key, and then the ENTER/ADV key to enter *Program Mode*. Continuing to press the ENTER/ADV key will display each operating parameter. While a particular parameter is being displayed, the ↑ (UP) and ↓ (DOWN) arrow keys can be used to change the value. After the value is changed, the ENTER/ADV key must be pressed to enter the data into memory. *Table 13 on page 120* shows the programmable limits and default values for each operating parameter.

Following are the displays for the programmable values in the order they appear:

```
DISCHARGE  PRESSURE
CUTOUT = 395 PSIG
```

DISCHARGE PRESSURE CUTOUT is the discharge pressure at which the system will shutdown as monitored by the optional discharge transducer. This is a software shutdown that acts as a backup for the mechanical high pressure switch located in the refrigerant circuit. The system can restart when the discharge pressure drops 40 PSIG (2.76 barg) below the cutout point.

If the optional discharge pressure transducer is not installed, this programmable safety would not apply. It should be noted that every system has a mechanical high pressure cutout that protects against excessive high discharge pressure regardless of whether or not the optional discharge pressure is installed.

```
SUCTION PRESSURE
CUTOUT = 80.0 PSIG
```

The SUCTION PRESSURE CUTOUT protects the chiller from an evaporator freeze-up. If the suction pressure drops below the cutout point, the system will shut down. Typically, the cutout should be set to 80 PSIG (5.52 Bars) form water cooling.

NOTE

***There are some exceptions when the suction pressure is permitted to temporarily drop below the cutout point. Details are explained under the topic of SYSTEM SAFETIES.***

```
LOW AMBIENT TEMP
CUTOUT = 25.0°F
```

The LOW AMBIENT TEMP CUTOUT allows the user to select the chiller outside ambient temperature cutout point. If the ambient falls below this point, the chiller will shut down. Restart can occur when temperature rises 2 °F (1.11 °C) above the cutout setpoint.

```
LEAVING LIQUID TEMP
CUTOUT = 36.0°F
```

The LEAVING LIQUID TEMP CUTOUT protects the chiller from an evaporator freeze-up. Anytime the leaving chilled liquid temperature drops to the cutout point, the chiller shuts down. Restart will be permitted when the leaving chilled liquid temperature rises 2 °F (1.11 °C) above the cutout setpoint.

When water cooling mode is programmed (OPTIONS key), the value is fixed at 36.0 °F (2.22 °C) and cannot be changed. Glycol cooling mode can be programmed to values listed in *Table 13 on page 120*.

```
ANTI RECYCLE TIMER
= 600 SEC
```

The programmable anti-recycle timer assures that systems do not short cycle, and the compressor motors have sufficient time to dissipate heat after a start. This timer is programmable under the PROGRAM key between 300 and 600 seconds. Whenever possible, to reduce cycling and motor heating, the anti-recycle timer should be adjusted as high as possible. The programmable anti-recycle timer starts the timer when the first compressor in a system starts. The timer begins to count down. If all the compressors in the circuit cycle OFF, a compressor within the circuit will not be permitted to start until the anti-recycle timer has timed out. If the lead system has run for less than 5 minutes, 3 times in a row, the anti-recycle timer will be extended to 10 minutes, if currently programmed for less than 10 minutes.

```
FAN CONTROL ON
PRESSURE = XXX PSIG
```

The Fan Control On Pressure is the programmed pressure value that is used to stage the condenser fans on, in relation to discharge pressure. Refer to *Standard Condenser Fan Control on page 146* in *SECTION 7 – UNIT CONTROLS* and *Table 22 on page 147* and *Table 23 on page 148*.

```
FAN DIFFERENTIAL OFF
PRESSURE = XXX PSIG
```

The Fan Differential Off Pressure is the programmed differential pressure value that is used to stage the condenser fans OFF, in relation to discharge pressure. Refer to *Standard Condenser Fan Control on page 146* in *SECTION 8 – UNIT OPERATION* and *Table 22 on page 147* and *Table 23 on page 148*.

```
TOTAL NUMBER OF
COMPRESSORS = 6
```

The TOTAL NUMBER OF COMPRESSORS is the total quantity of compressors in the chiller, and determines the stages of cooling available. Note in *Table 13*, the chiller may have single or dual systems. Single system units can have 2 or 3 compressors, while dual system units may have 4 or 6 compressors.

NOTE

***This MUST be programmed correctly to assure proper chiller operation.***

```
NUMBER OF FANS
PER SYSTEM =X
```

The Number of Fans Per System must be programmed as needed to match the number of fans on each system.

```
SYS X TRIP VOLTS
=X.X VOLTS
```

```
UNIT TRIP VOLTS
=X.X VOLTS
```

**TABLE 13 -** PROGRAM KEY LIMITS AND DEFAULT

| PROGRAM VALUE | MODE | LOW LIMIT | HIGH LIMIT | DEFAULT |
|---|---|---|---|---|
| DISCHARGE PRESSURE CUTOUT | — | 325 PSIG | 575 PSIG | 570 PSIG |
| | | 22.4 BARG | 39.6 BARG | 39.3 BARG |
| SUCTION PRESSURE CUTOUT | WATER COOLING | 80.0 PSIG | 120.0 PSIG | 80.0 PSIG |
| | | 5.52 BARG | 8.27 BARG | 5.52 BARG |
| | GLYCOL COOLING | 42.0 PSIG | 70.0 PSIG | 44.0 PSIG |
| | | 2.9 BARG | 4.83 BARG | 3.03 BARG |
| LOW AMBIENT TEMP. CUTOUT | STANDARD AMBIENT | 25.0 °F | 60.0 °F | 25.0 °F |
| | | -3.9 °C | 15.6 °C | -3.9 °C |
| | LOW AMBIENT | 0 °F | 60.0 °F | 25.0 °F |
| | | -17.8 °C | 15.6 °C | -3.9 °C |
| LEAVING CHILLED LIQUID TEMP. CUTOUT | WATER COOLING | — | — | 36 °F |
| | | | | 2.2 °C |
| | GLYCOL COOLING | -1.0 °F | 36.0 °F | 36.0 °F |
| | | -18.3 °C | 2.2 °C | 2.2 °C |
| ANTI-RECYCLE TIMER | — | 300 SEC. | 600 SEC. | 600 SEC. |
| FAN CONTROL ON PRESSURE | — | 360 PSIG | 485 PSIG | 385 PSIG |
| | | 24.8 BARG | 33.4 BARG | 26.5 BARG |
| FAN DIFFERENTIAL OFF PRESSURE | — | 80 PSID | 160 PSID* | 125 PSID |
| | | 5.51 BARD | 11.03 BARD* | 8.62 BARD |
| TOTAL NUMBER OF COMPRESSORS | SINGLE SYSTEM | 2 | 3 | 3 |
| | DUAL SYSTEM | 4 | 6 | 6 |
| NUMBER OF FANS PER SYSTEM | — | 2 | 4 | 3 |
| UNIT/SYSTEM TRIP VOLTS | CURRENT FEEDBACK | 0.5 Volts | 4.5 Volts | 2.5 Volts |
| REMOTE UNIT ID | — | 0 | 7 | 0 |

* The minimum discharge pressure allowed is 235 PSIG. The Fan Differential Off Pressure High Limit will be lowered (reduced) to prevent going below 235 PSIG based on where the fan control On Pressure is programmed.

Depending on the option, the trip voltage for a specific system or unit high current trip can be programmed. It also calibrates the current read-out under the OPER DATA key. The approximate programmed value is calculated using the following formulas.

### System Trip Volts

For individual system high current trip programming on chillers:

- Add the sum of the compressor and fan RLA's in the system
- Multiply the sum by 1.25
- Divide by 225A
- The resulting voltage is the value that should be programmed

For example, if fan and compressor RLA's total 100A:

$$\frac{5V \times 100A}{225A} \times 1.25 = \frac{625VA}{225A} = 2.8V$$

The programmed value will be 2.8V. A similar calculation and programming will be necessary for the other system in a 2-system chiller.

### Unit Trip Volts

For total chiller high current trip programming on 460VAC chillers:

- Add the sum of all the compressors and fan RLA's in the chiller
- Multiply the sum by 1.25
- Divide by 225A
- The resulting voltage is the value that should be programmed

For example, if fan and compressor RLA's total 180A:

$$\frac{5V \times 180A}{225A} \times 1.25 = \frac{1125VA}{225A} = 5.0V$$

The programmed value will be 5.0V.

```
REMOTE UNIT ID
PROGRAMMED = X
```

When communications is required with a BAS or OptiView Panel, individual unit IDs are necessary for communications with specific chillers on a single RS-485 line. ID 0 - 7 is selectable.

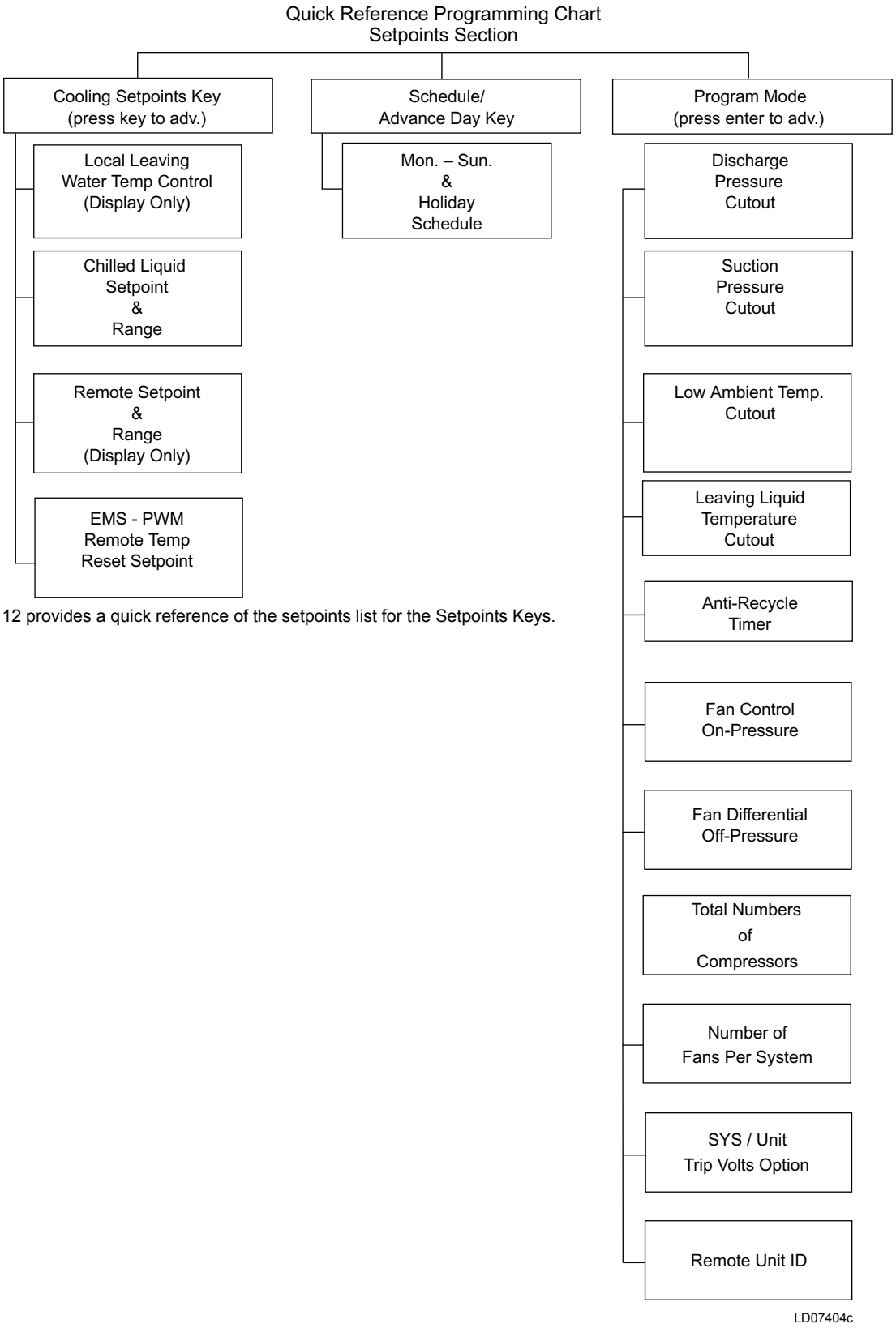


Table 12 provides a quick reference of the setpoints list for the Setpoints Keys.

**FIGURE 25 -** SETPOINTS QUICK REFERENCE LIST

## UNIT KEYS

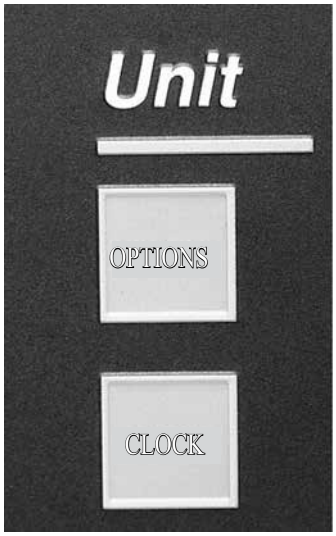


00070VIP

### Options Key

There are many user programmable options under the OPTIONS key. The OPTIONS key is used to scroll through the list of options by repeatedly pressing the OPTIONS key. After the selected option has been displayed, the ↑ (UP) and ↓ (DOWN) arrow keys are then used to change that particular option. After the option is changed, the ENTER/ADV key must be pressed to enter the data into memory.

NOTE

***Many of the OPTIONS displayed are only programmable under the SERVICE MODE and not under the OPTIONS key. Options only programmable under the SERVICE MODE are noted in the details describing the option.***

*Figure 26 on page 128* shows the programmable options. Following are the displays in the order they appear:

#### *Option 1 – Language*

```
DISPLAY LANGUAGE
     ENGLISH
```

English, Spanish, French, German, and Italian can be programmed.

#### *Option 2 – System Switches (two system units only)*

(Single System Display is similar)

```
SYS 1 SWITCH ON
SYS 2 SWITCH ON
```

This allows both systems to run.

or

```
SYS 1 SWITCH ON
SYS 2 SWITCH OFF
```

This turns system 2 OFF.

```
SYS 1 SWITCH OFF
SYS 2 SWITCH ON
```

This turns system 1 OFF.

or

```
SYS 1 SWITCH OFF
SYS 2 SWITCH OFF
```

This turns systems 1 and 2 OFF.

NOTE

***Turning a system OFF with its system switch allows a pumpdown to be performed prior to shutdown.***

#### *Option 3 – Chilled Liquid Cooling Type*

```
CHILLED LIQUID
     WATER
```

The chilled liquid is water. The Cooling Setpoint can be programmed from 40 °F to 70 °F (4.4 °C to 21.1 °C)

or

```
CHILLED LIQUID
GLYCOL
```

The chilled liquid is glycol. The Cooling Setpoint can be programmed from 10 °F to 70 °F (-12.2 °C to 21.1 °C).

### Option 4 – Ambient Control Type

```
AMBIENT CONTROL
STANDARD
```

The low ambient cutout is adjustable from 25 °F to 60 °F (-3.9 °C to 15.6 °C).

or

```
AMBIENT CONTROL
LOW AMBIENT
```

The low ambient cutout is programmable down to 0 °F (-17.8 °C). **A low ambient kit MUST be installed for this option to be chosen. If the kit is NOT installed, and low ambient is selected, low pressure faults and compressor damage may occur.**

### *Option 5 – Local/Remote Control Type*

```
LOCAL / REMOTE MODEL
LOCAL
```

When programmed for LOCAL, an ISN or RCC control can be used to monitor only. The micro panel will operate on locally programmed values and ignore all commands from remote devices, or through the RS-485 inputs. The chiller will communicate and send data to the remote monitoring devices.

or

```
LOCAL/REMOTE MODE
REMOTE
```

This mode should be selected when an ISN or RCC control is to be used to control the chiller. This mode will allow the ISN to control the following items: Remote Start/Stop, Cooling Setpoint, Load Limit, and History Buffer Request. If the unit receives no valid ISN transmission for 5 minutes, it will revert back to the locally programmed values.

### *Option 6 – Unit Control Mode*

```
CONTROL MODE
RETURN LIQUID
```

Unit control is based on return chilled liquid temp. Return Chilled Liquid Control can only be selected on units that have 4 to 6 compressors (dual system units).

or

```
CONTROL MODE
LEAVING LIQUID
```

### *Option 7 – Display Units*

```
DISPLAY UNITS
IMPERIAL
```

This mode displays system operating values in Imperial units of °F or PSIG.

or

```
DISPLAY UNITS
SI
```

This mode displays system operating values in Scientific International Units of °C or barg.

### *Option 8 – Lead/Lag Type (two system units only)*

```
LEAD/LAG CONTROL
MANUAL SYS 1 LEAD
```

SYS 1 selected as lead compressor. SYS 1 lead option MUST be chosen if Hot Gas Bypass is installed.

or

```
LEAD/LAG CONTROL
MANUAL SYS 2 LEAD
```

SYS 2 selected as lead compressor.

or

```
LEAD/LAG CONTROL
AUTOMATIC
```

Lead/lag between systems may be selected to help equalize average run hours between systems on chillers with 2 refrigerant systems. Auto lead/lag allows automatic lead/lag of the two systems based on an average run hours of the compressors in each system. A new lead/lag assignment is made whenever all compressors shut down. The microprocessor will then assign the "lead" to the system with the shortest average run time.

### *Option 9 – Condenser Fan Control Mode*

```
FAN CONTROL
DISCHARGE PRESSURE
```

Condenser fans are controlled by discharge pressure only. This mode must be chosen.

or

```
FAN CONTROL
AMBIENT & DSCH PRESS
```

Do not select this option on R-410A chillers.

### *Option 10 – Manual Override Mode*

```
MANUAL OVERRIDE MODE
DISABLED
```

This option allows overriding of the daily schedule that is programmed. MANUAL OVERRIDE MODE – DISABLED indicates that override mode has no effect.

or

```
MANUAL OVERRIDE MODE
ENABLED
```

Manual Override Mode is enabled. This is a service function and when enabled, will allow the unit to start when shut down on the daily schedule. It will automatically be disabled after 30 minutes.

### *Option 11 – Current Feedback Options Installed*

```
CURRENT FEEDBACK
NONE
```

This mode should be selected when the panel is not equipped with current sensing capability.

or

```
CURRENT FEEDBACK
ONE PER UNIT
```

This mode should be selected when an optional 2ACE Module is installed to allow combined current monitoring of all systems by sensing current on the incoming line.

or

```
CURRENT FEEDBACK
ONE PER SYSTEM
```

This mode should be selected when an optional 2ACE module is installed to allow individual current monitoring of each system. SYS 1 input is to J7 of the I/O. SYS 2 input is to J8 of the I/O.

### *Option 12 – Power Fail Restart*

```
POWER FAIL RESTART
AUTOMATIC
```

Chiller auto restarts after a power failure.

```
POWER FAIL RESTART
MANUAL
```

After a power failure, the UNIT switch must be toggled before restart at the unit is allowed. NORMALLY MANUAL RESTART should NOT BE SELECTED.

### *Option 13 – Soft Start Enable/Disable*

```
SOFT START
DISABLED
```

SOFT START “DISABLED” MUST be selected on all chillers.

This message may not be viewable on non-European chillers.

### *Option 14 – Unit Type*

```
UNIT TYPE
LIQUID CHILLER
```

The UNIT TYPE message cannot be modified under the unit keys.

CAUTION

***“Liquid CHILLER” must be displayed, or damage to compressors or other components will occur if operated in the HEAT PUMP or CONDENSING UNIT modes.***

**If unit type needs to be changed to make the unit a liquid chiller, remove power and then remove the jumper between J11-7 and J11-12 on the I/O Board. Reapply power to the** micro panel **and the** microprocessor **will store the change.**

### *Option 15 – Refrigerant Type*

```
REFRIGERANT TYPE
R-410A
```

Refrigerant type R-410A must be selected under Service Mode. Refrigerant type is displayed under the OPTIONS key, but is only programmable in Service Mode.

CAUTION

***Incorrect programming may cause damage to compressors.***

### *Option 16 – Expansion Valve Type*

```
EXPANSION VALVE TYPE
THERMOSTATIC
```

Expansion valve type, thermostatic or electronic may be selected under Service Mode. Expansion valve type is displayed under the OPTIONS key, but is only programmable in Service Mode. YLAA chillers will typically always be equipped with thermostatic expansion valves.

CAUTION

***Incorrect programming may cause damage to compressors.***

Also see the UNIT KEYS PROGRAMMING QUICK REFERENCE LIST in *Figure 26 on page 128*.

### *Option 17 – Flash Card Update*

```
FLASH CARD UPDATE
DISABLED
```

A Flash Card is used to input the operating program into the chiller IPU. A Flash Card is used instead of an EPROM. Normally, a Flash Card update is not required and the message above will be displayed.

If the operating software is to be updated, insert the Flash Card into the Flash Card input port. Turn off the unit switch and set the FLASH CARD UPDATE TO "ENABLED" using the ↑ and ↓ keys.

```
FLASH CARD UPDATE
ENABLED
```

Press the ENTER key and the following message will be displayed until the update has been completed. The keypad and display will not respond during the update. DO NOT reset or power down the chiller until the update is completed.

```
FLASH CARD UPDATING
PLEASE WAIT...
```

After the update is completed, an automatic reboot will occur. If an error occurred, the following message will appear with the error code and no reboot will occur.

```
FLASH CARD UPDATE
ERROR                XXXXX
```

If the update resulted in an error, the original program will still be active. When an error occurs, assure the correct Flash Card was utilized. Incorrect chiller software will cause an error. If this is not the case, the Flash Card is most likely defective or the IPU and I/O combo board is bad.

### Option 18 – Remote Temperature Reset

```
REMOTE TEMP RESET
INPUT          XXXXXXXXXXXXXX
```

Remote Temp Reset input selection is programmable according to the type of input utilized. The following options are available:

- DISABLED (default)
- 0.0 – 10.0 (DC)
- 2.0 – 10.0V (DC)
- 0.0 – 20.0 mA
- 4.0 – 20.0 mA

NOTE

***The options display message for Remote Temp Reset Input only appears if the Temp Reset Option is enabled under Service Mode. The option must be enabled under the Service Mode for the Remote Temperature Reset to operate.***

### Option 19 – Pump Control

Pump Control is utilized to operate the optional on-board pump kit or to control an external pump through dry contacts 23 and 24 on Terminal Block XTBC2. To use this option, the following selection should be made in the Service Mode:

```
      YORK  HYDRO
KIT   PUMPS          =1
```

When YORK HYDRO KIT PUMPS = 1, the controls will be closed to run the pumps whenever any one of the following conditions are true:

- Low Leaving Chilled Liquid Fault
- Any compressor is running
- Daily Schedule is ON and Remote Stop is closed.

NOTE

***Even if one of the above conditions are true, the pump will not run if the chiller has been powered up for less than 30 seconds; or if the pump has run in the last 30 seconds to prevent pump overheating.***

```
        EXTERNAL
      EVAP  PUMP
```

EXTERNAL EVAP PUMP should be selected if an external pump is being controlled with the chiller pump contacts. The operation will be the same as YORK HDRO KIT PUMPS = 1

The following option should not be selected.

```
      YORK  HYDRO
KIT   PUMPS          =2
```

### *Option 20 – Pump Selection*

The displays for this PUMP SELECTION option should only appear if "YORK HYDRO KIT PUMPS = 2" are selected under Option 19. Presently, this option should not be used.

### Clock

The CLOCK display shows the current day, time, and date. Pressing the CLOCK key will show the current day, time, and date.

It is important that the date and time be correct, otherwise the daily schedule will not function as desired if programmed. In addition, for ease of troubleshooting via the History printouts, the day, time, and date should be correct.

To change the day, time, and date press the CLOCK key. The display will show something similar to the following:

```
TODAY  IS  FRI  08:51AM
      25  JAN  02
```

The line under the F is the cursor. If the day is correct, press the ENTER/ADV key. The cursor will move under the 0 in 08 hours. If the day is incorrect, press the ↑ (UP) or ↓ (DOWN) arrow keys until the desired day is displayed and then press the ENTER/ADV key at which time the day will be accepted and the cursor will move under the first digit of the "2 digit hour". In a similar manner, the hour, minute, meridian, month, day, and year may be programmed, whenever the cursor is under the first letter/numeral of the item. Press the ↑ (UP) or ↓ (DOWN) arrow keys until the desired hour, minute, meridian; day, month, and year are displayed. Pressing the ENTER/ADV key will save the valve and move the cursor on to the next programmable variable.

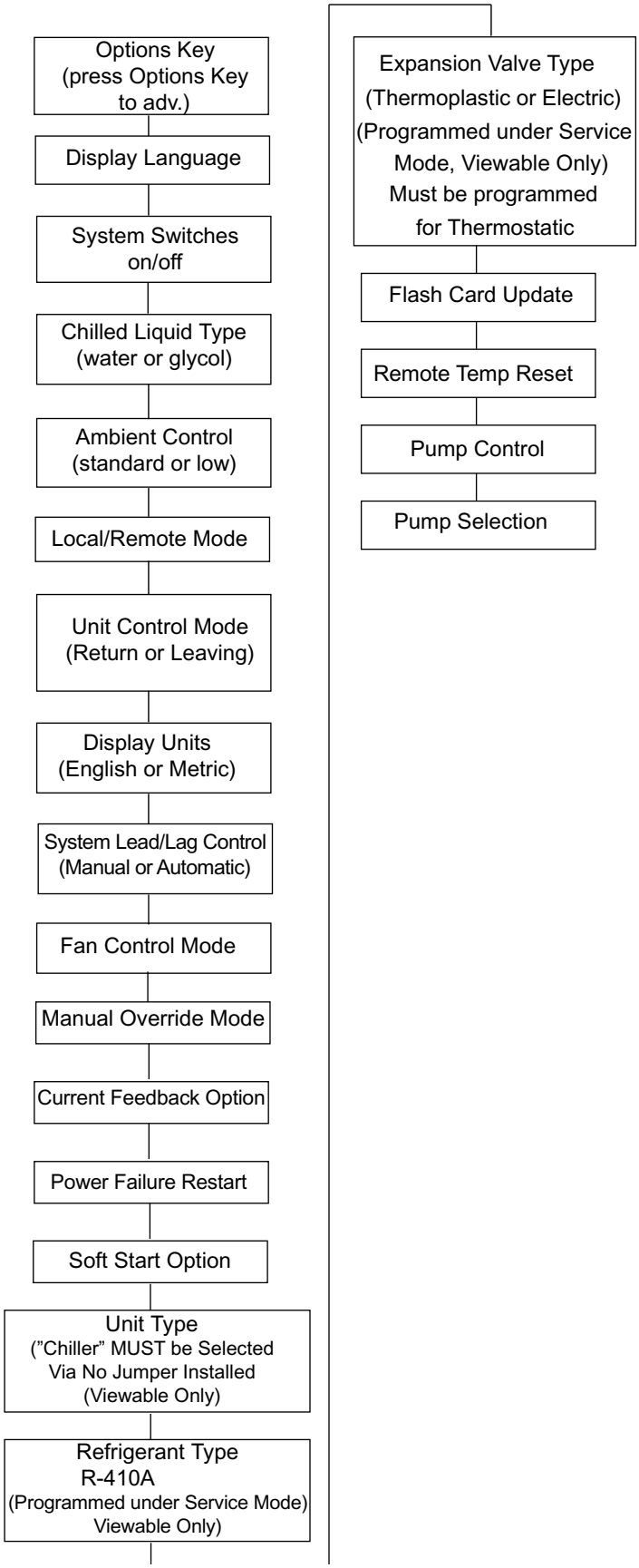


*Figure 26* provides a quick reference list for the Unit key setpoints.

LD07405d

**FIGURE 26 -** UNIT KEYS OPTIONS PROGRAMMING QUICK REFERENCE LIST

## BACNET, MODBUS, N2 AND YORKTALK 2 COMMUNICATIONS

Data can be read and in some cases modified using a serial communication BACnet, Modbus or YorkTalk 2 network connection. This information allows communications of chiller operating parameters and external control changes to setpoint, load limiting, and start/stop commands.

BACnet and YorkTalk 2 RS485 networks are wired to the + and - terminals of TB1 for port 1 communications. Modbus network connection has the option of RS232 or RS485 connection for port 2 communications. Modbus network is wired to either TB2 or TB3 as follows:

- RS-485: connect to TB2 - Network (-1) to TB2 (-1); Network (+1) to TB2 (+1)
- RS-232: connect to TB3 - Network (RX) to TB3 (TXD); Network (TX) to TB3 (RXD); Network (GND) to TB3 (GND)

*Refer to Figure 27 on page 130 for TB1, TB2 and TB3 locations.*

In most cases, communication parameters will need to be modified. Table 30 on page 131 lists setup parameters for the available protocols. Modification is accomplished by pressing the PROGRAM, DOWN ARROW, DOWN ARROW, DOWN ARROW, DOWN ARROW, and ENTER keys in sequence. The list below shows the displays for the values that may be modified:

```
DE MODIFIER ADDRESS
                XXXXX

DE MODIFIER OFFSET
                  XX

P1 PROTOCOL
              XXXXXX

P1 MANUAL MAC
ADDRESS         XXX

P1 BAUD RATE
              XXXXX

P1 PARITY
              XXXXX

P1 STOP BITS
                  X
```

```
P2 PROTOCOL
          XXXXXXXXXX

P2 MANUAL MAC
ADDRESS         XXX

P2 BAUD RATE
              XXXXX

P2 PARITY
              XXXXX

P2 STOP BITS
                  X

P2 HW SELECT BIT
              XXXXX

REAL TIME ERROR     ##
RESET 1 = YES, 0 = NO  0
```

Note: *See Table 16 on page 132 for error descriptions*

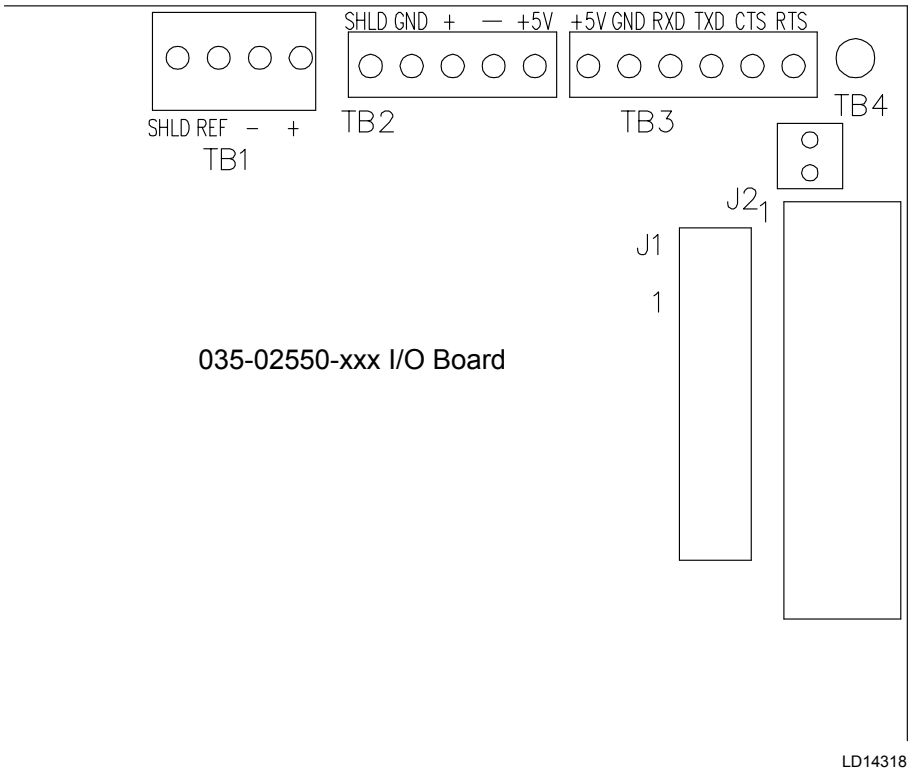


**FIGURE 27 -** MICRO PANEL CONNECTIONS

The table below shows the minimum, maximum, and default values.

**TABLE 14 -** MINIMUM, MAXIMUM AND DEFAULT VALUES

| DESCRIPTION | MINIMUM | MAXIMUM | DEFAULT |
|---|---|---|---|
| DE MODIFIER ADDRESS | -1 | 41943 | -1 |
| DE MODIFIER OFFSET | -1 | 99 | -1 |
| P1 BAUD RATE | 1200 | 76800 | 4800 |
| | 1200, 4800, 9600, 19200, 38400, 76800, AUTO SELECTABLE | | |
| P2 BAUD RATE | 1200 | 57600 | 1200 |
| | 1200, 4800, 9600, 19200, 38400, 57600 SELECTABLE | | |
| P1, P2 MANUAL Mac ADDRESS | -1 | 127 | -1 |
| P1, P2 PARITY | NONE | IGNORE | NONE |
| | NONE, EVEN, ODD, IGNORE SELECTABLE | | |
| P1 PROTOCOL | BACNET | API | BACNET |
| | BACNET, API SELECTABLE | | |
| P2 PROTOCOL | TERMINAL | MODBUS CLIENT | API |
| | TERMINAL, MODBUS IO, MODBUS SERVER, API, MODBUS CLIENT SELECTABLE | | |
| P1, P2 STOP BITS | 1 | 2 | 1 |
| RESET REAL TIME ERROR | NO | YES | NO |

The table below shows set-up requirements for each communication protocol.

**TABLE 15 -** VALUES REQUIRED FOR BAS COMMUNICATION

| SETTING DESCRIPTION | PROTOCOL | | | |
|---|---|---|---|---|
| | BACNET MS/TP | MODBUS RTU[5] | YORKTALK 2 | N2[6] |
| DE MODIFIER ADDRESS | 0 to 41943[3] | 1 | -1 | 0 to 41943[3] |
| DE MODIFIER OFFSET | 0 to 99[4] | 0 | N/A | 0 to 99[4] |
| P1 PROTOCOL | BACNET | N/A | N/A | 9n2 |
| P1 MANUAL MAC ADDRESS | 0-127[1] | N/A | N/A | 0-127[1] |
| P1 BAUD RATE | 9600 To 76800 or Auto Selectable[1] | N/A | N/A | 9600 |
| P1 PARITY | NONE | N/A | N/A | NONE |
| P1 STOP BITS | 1 | N/A | N/A | 1 |
| P2 PROTOCOL | N/A | MODBUS SVR | N/A | N/A |
| P2 MANUAL MAC ADDRESS | N/A | 0-127[1] | N/A | N/A |
| P2 BAUD RATE | N/A | 19,200[2] | N/A | N/A |
| P2 PARITY | N/A | NONE[2] | N/A | N/A |
| P2 STOP BITS | N/A | 1 | N/A | N/A |
| P2 HW SELECT BIT | N/A | RS-485 or RS-232[1] | N/A | N/A |
| RESET REAL TIME ERROR | N/A | N/A | N/A | N/A |
| P1 HW SELECT BIT | N/A | N/A | N/A | N/A |
| CHILLER ID | N/A | N/A | 0 | N/A |

1. As required by network. 2. Or other as required by network. 3. Number is multiplied by 100, set as required by network.
4. Number is added to de modifier address, set as required by network.
5. Unit operating software version C.Mmc.13.03 or later required for Modbus Protocol.
6. Unit operating software version 04 (C.MMC.13.04, C.MMC.14.04, or C.MMC.16.04) or higher required for N2 protocol functionality.



## BACnet and Modbus Communications

Chiller data that can be read and modified using specific BACnet or Modbus Register Addresses; and the data associated with the addresses, is outlined in the following description:

### *Analog Write Points*

This data can be read and modified using a BACnet or Modbus network connection. The Modbus Register Address for these points is 1025 + AV #.

### *Binary Write Points*

This data can be read and modified using a BACnet or Modbus network connection. The Modbus Register Address for these points is 1537 + BV #.

### *Analog Read Only Points*

This data can be read using a BACnet or Modbus network connection and can NOT be modified using this connection. The Modbus Register Address for these points is 513 + AI #.

### *Binary Monitor Only Points*

This data can be read using a BACnet or Modbus network connection and can NOT be modified using this connection. The Modbus Register Address for these points is 1281 + BI #.

*Refer to Table 17 on page 133 for complete list of BACnet and Modbus registers.*

NOTE

***The latest data map information is listed on the Johnson Controls Equipment Integration website.***

### Communications Data Map Notes

*(See Table 17)*

1. IPU II based units are configured for Native BACnet MS/TP and Modbus RTU communications. E-Link Gateway not required for these two communication protocols.
2. BACnet Object Types:

   0 = Analog In
   1 = Analog Out
   2 = Analog Value
   3 = Binary In
   4 = Binary Output
   5 = Binary Value
   8 = Device
   15 = Alarm Notification (0 through 127 are reserved ASHRAE Objects).

3. 

   WC= Inches of water column
   CFM = Cubic Feet per Minute
   FPM = Feet per Minute
   PSI = Lbs per square inch
   Pa = Pascals
   kPa = Kilopascals
   PPM = Part per Million
   kJ/kg = Kilojoules per Kilogram.

4. Water Cooled Scroll units use the same firmware as Air Cooled Scroll units, ignoring Fan Control.

The table below shows the real time error numbers that may be encountered during communication setup and a description of each.

**TABLE 16 -** REAL TIME ERROR NUMBERS

| ERROR NUMBER (##) | DESCRIPTION |
|---|---|
| 0 | ALL OK |
| 1 | DATUM TYPE OK TEST FAILED |
| 2 | ENGLISH TEXT TOO LONG |
| 3 | FLOATING POINT EXCEPTION |
| 4 | GET PACKET FAILED |
| 5 | GET TYPE FAILED |
| 6 | INVALID UNIT CONVERSION |
| 7 | INVALID HARDWARE SELECTION |
| 8 | REAL TIME FAULT |
| 9 | SPANISH TEXT TOO LONG |
| 10 | THREAD EXITED |
| 11 | THREAD FAILED |
| 12 | THREAD STALLED |
| 13 | IO BOARD RESET |
| 14 | BRAM INVALID |
| 15 | BACNET SETUP FAILED |

NOTE

***Reboot required (cycle power) after settings are changed.***

## TABLE 17 - BACNET AND MODBUS COMMUNICATIONS DATA MAP

YCAL/YCUL/YCWL/YLAA/YLUA IPU II **Native** **Modbus, BACnet MS/TP, N2 Data Maps** **Board: 031-02630-xxx w/ 031-02550**

| ITEM | Version | Date | York PN | | CK Sum | Comments |
|---|---|---|---|---|---|---|
| 1 | C.MMC.16.00 | 29-Nov-06 | 031-02755-004 | | | Basildon MMHP with Board: 031-02630-xxx w/ 031-02550 |
| 2 | C.MMC.13.02 | 17-Oct-08 | 031-02755-001 | | | Standard Micro Board 031-02550-xxx . Fix native Modbus communications. Fix Café Metric functionality (SCR-766) |
| 3 | C.MMC.14.02 | 17-Oct-08 | 031-02755-003 | | | MMHP with Board: 031-02630-xxx w/ 031-02550Fix native Modbus communications. Fix Café Metric functionality (SCR-766) |
| 4 | C.MMC.16.02 | 17-Oct-08 | 031-02755-004 | | | Basildon MMHP with Board: 031-02630-xxx w/ 031-02550 Fix native Modbus communications. Fix Café Metric functionality (SC |
| 5 | C.MMC.13.03 | 3-Mar-09 | 031-02755-001 | | | Add AI 54, 55, 56, 57 |
| 6 | C.MMC.14.03 | 3-Mar-09 | 031-02755-003 | | | Add AI 54, 55, 56, 57 |
| 7 | C.MMC.16.03 | 3-Mar-09 | 031-02755-004 | | | Add AI 54, 55, 56, 57 |
| 8 | | | | | | |
| 9 | | | | | | |
| 10 | | | | | | |

| ITEM REF NUM | BACnet NAME | BACnet Object/Instance | MODBUS ADDRESS | MODBUS Data Type Supported | MODBUS Scaling | N2 Metasys | ENG UNITS | READ WRITE | POINT DESCRIPTION | Point List Code S=Standard; O = Optional; N = Not Available 1 | 2 | 3 | 4 | 5 | 6 | 7 | 8 | 9 | 10 |
|---|---|---|---|---|---|---|---|---|---|---|---|---|---|---|---|---|---|---|---|
| 1 | | | | | SEE NOTE 7 | | SEE NOTE 5 | | **SEE NOTE 1** | | | | | | | | | | |
| 3 | **ANALOG WRITE POINTS** | | | | | | | | | | | | | | | | | | |
| 4 | REM_SETP | AV_1 | 1026 | 03,06,16 | div10 | ADF 1 | F° | R/W | Setpoint Cooling Setpoint(HP Only), 99 = Auto; (40°F - 70°F) | S | S | S | S | S | S | S | | | |
| 5 | SP_REM_SP_S1 | AV_2 | 1027 | 03,06,16 | div10 | ADF 2 | PSIG | R/W | Sys 1 Setpoint (Suction Pressure Control units only) | S | S | S | S | S | S | S | | | |
| 6 | LOAD_LIMIT | AV_3 | 1028 | 03,06,16 | n/a | ADF 3 | index | R/W | Load Limit Stage (0, 1, 2) ( see note 2 below) | S | S | S | S | S | S | S | | | |
| 7 | REM_CR | AV_4 | 1029 | 03,06,16 | div10 | ADF 4 | F° | R/W | Cooling Range (DAT Mode Only) | S | S | S | S | S | S | S | | | |
| 8 | SP_REM_SP_S2 | AV_5 | 1030 | 03,06,16 | div10 | ADF 5 | PSIG | R/W | Sys 2 Setpoint (Suction Pressure Control) | S | S | S | S | S | S | S | | | |
| 9 | REM_SP_HEAT | AV_6 | 1031 | 03,06,16 | div10 | ADF 6 | F° | R/W | Heating Setpoint (HP Only), 999 = Auto (95°F - 122°F) | S | S | S | S | S | S | S | | | |
| 10 | HP_MODE | AV_7 | 1032 | 03,06,16 | n/a | ADF 7 | index | R/W | Mode (HP Only) (0=Panel, 1=Cooling, 2=Heating) | S | S | S | S | S | S | S | | | |
| 11 | | | | | | | | | | S | S | S | S | S | S | S | | | |
| 12 | **BINARY WRITE POINTS** | | | | | | | | | | | | | | | | | | |
| 13 | START_STOP | BV_1 | 1538 | 01,03,05,15,06, | n/a | BD 1 | 0, 1 | R/W | Stop Start Command | S | S | S | S | S | S | S | | | |
| 14 | SS_SYS1 | BV_2 | 1539 | 01,03,05,15,06, | n/a | BD 2 | 0, 1 | R/W | Sys 1 Start/Stop ( Suction Pressure (SP) Control Only) | S | S | S | S | S | S | S | | | |
| 15 | SS_SYS2 | BV_3 | 1540 | 01,03,05,15,06, | n/a | BD 3 | 0, 1 | R/W | Sys 2 Start/Stop ( Suction Pressure (SP) Control Only) | S | S | S | S | S | S | S | | | |
| 16 | **ANALOG READ ONLY POINTS** | | | | | | | | | | | | | | | | | | |
| 17 | LCHLT | AI_1 | 514 | 03,04 | X10 | ADF 8 | F° | R | Leaving Chilled Liquid Temp | S | S | S | S | S | S | S | | | |
| 18 | RCHLT | AI_2 | 515 | 03,04 | X10 | ADF 9 | F° | R | Return Chilled Liquid Temp | S | S | S | S | S | S | S | | | |
| 19 | DAT | AI_3 | 516 | 03,04 | X10 | ADF 10 | F° | R | Disch Air Temp ( Condensing Units Only | S | S | S | S | S | S | S | | | |
| 20 | S1_SUCT_TEMP | AI_4 | 517 | 03,04 | X10 | ADF 11 | F° | R | Sys 1 Suction Temp (EEV & Cond Units Only) | S | S | S | S | S | S | S | | | |
| 21 | OAT | AI_5 | 518 | 03,04 | X10 | ADF 12 | F° | R | Ambient Air Temperature | S | S | S | S | S | S | S | | | |
| 22 | S1_SUCT_SHEAT | AI_6 | 519 | 03,04 | X10 | ADF 13 | F° | R | Sys 1 Suction Superheat ( EEV Models Only) | S | S | S | S | S | S | S | | | |
| 23 | S1_RUN_TIME | AI_7 | 520 | 03,04 | X10 | ADF 14 | seconds | R | Sys 1 Run Time (seconds) | S | S | S | S | S | S | S | | | |
| 24 | S1_SUCT_PR | AI_8 | 521 | 03,04 | X10 | ADF 15 | PSIG | R | Sys 1 Suction Pressure | S | S | S | S | S | S | S | | | |
| 25 | S1_DSCH_PR | AI_9 | 522 | 03,04 | X10 | ADF 16 | PSIG | R | Sys 1 Discharge Pressure | S | S | S | S | S | S | S | | | |
| 27 | S1_CIR_TEMP | AI_10 | 523 | 03,04 | X10 | ADF 17 | F° | R | Sys 1 Cooler Inlet Refrigerant Temp (R-407c Models Only) | S | S | S | S | S | S | S | | | |
| 28 | S1_DEF_TEMP | AI_11 | 524 | 03,04 | X10 | ADF 18 | F° | R | Sys 1 Defrost Temperature (HP Only) | S | S | S | S | S | S | S | | | |
| 29 | S1_EEV_OUT | AI_12 | 525 | 03,04 | X10 | ADF 19 | F° | R | System 1 EEV Output % ( EEV Models Only) | S | S | S | S | S | S | S | | | |
| 30 | S1_AR_TIMER | AI_13 | 526 | 03,04 | X10 | ADF 20 | seconds | R | Sys 1 Anti-Recycle Timer | S | S | S | S | S | S | S | | | |
| 31 | AC_TIMER | AI_14 | 527 | 03,04 | X10 | ADF 21 | seconds | R | Anti-Coincident Timer | S | S | S | S | S | S | S | | | |
| 32 | S2_SUCT_TEMP | AI_15 | 528 | 03,04 | X10 | ADF 22 | °F | R | System 2 Suction Temp ( EEVModels Only) | S | S | S | S | S | S | S | | | |
| 33 | S2_RUN_TIME | AI_16 | 529 | 03,04 | X10 | ADF 23 | seconds | R | Sys 2 Run Time (seconds) | S | S | S | S | S | S | S | | | |
| 34 | S2_SUCT_PR | AI_17 | 530 | 03,04 | **X10*** | ADF 24 | PSIG | R | Sys 2 Suction Pressure | S | S | S | S | S | S | S | | | |
| 35 | S2_DSCH_PR | AI_18 | 531 | 03,04 | X10 | ADF 25 | PSIG | R | Sys 2 Discharge Pressure | S | S | S | S | S | S | S | | | |
| 36 | S2_CIR_TEMP | AI_19 | 532 | 03,04 | X10 | ADF 26 | F° | R | Sys 2 Cooler Inlet Refrigerant Temperature(R-407c Only) | S | S | S | S | S | S | S | | | |
| 37 | S2_DEF_TEMP | AI_20 | 533 | 03,04 | X10 | ADF 27 | F° | R | Sys 2 Defrost Temperature (HP Only) | S | S | S | S | S | S | S | | | |
| 38 | S2_SUCT_SH | AI_21 | 534 | 03,04 | X10 | ADF 28 | F° | R | Sys 2 Suction SuperHeat (EEV Models Only) | S | S | S | S | S | S | S | | | |
| 39 | S2_AR_TIMER | AI_22 | 535 | 03,04 | X10 | ADF 29 | F° | R | Sys 2 Anti-Recycle Timer | S | S | S | S | S | S | S | | | |
| 40 | S2_EEV_OUT | AI_23 | 536 | 03,04 | X10 | ADF 30 | seconds | R | Sys 2 Suction Superheat ( EEV Models Only) | S | S | S | S | S | S | S | | | |

**TABLE 17 -** BACNET AND MODBUS COMMUNICATIONS DATA MAP (CONT'D)

| ITEM REF NUM | BACnet NAME | BACnet Object/Instance | MODBUS ADDRESS | MODBUS Data Type Supported | MODBUS Scaling | N2 Metasys | ENG UNITS | READ WRITE | POINT DESCRIPTION | Point List Code S=Standard; O = Optional; N = Not Available | | | | | | | | | |
|---|---|---|---|---|---|---|---|---|---|---|---|---|---|---|---|---|---|---|---|
| | | | | | | | | | | 1 | 2 | 3 | 4 | 5 | 6 | 7 | 8 | 9 | 10 |
| 41 | NUM_COMPS | AI_24 | 537 | 03,04 | X1 | ADF 31 | count | R | Number of Compressors | S | S | S | S | S | S | S | | | |
| 42 | S1_OP_CODE | AI_25 | 538 | 03,04 | X1 | ADF 32 | index | R | Sys 1 Operational Code (Definition in Table A) | S | S | S | S | S | S | S | | | |
| 43 | S1_FLT_CODE | AI_26 | 539 | 03,04 | X1 | ADF 33 | index | R | Sys 1 Fault Code (Definition in Table B) | S | S | S | S | S | S | S | | | |
| 44 | S2_OP_CODE | AI_27 | 540 | 03,04 | X1 | ADF 34 | index | R | Sys 2 Operational Code (Definition in Table A) | S | S | S | S | S | S | S | | | |
| 45 | S2_FLT_CODE | AI_28 | 541 | 03,04 | X1 | ADF 35 | index | R | Sys 2 Fault Code (Definition in Table B) | S | S | S | S | S | S | S | | | |
| 46 | S1_DBG_CODE | AI_29 | 542 | 03,04 | X1 | ADF 36 | index | R | Sys 1 Debug Code | S | S | S | S | S | S | S | | | |
| 47 | S1_FAN_STAGE | AI_30 | 543 | 03,04 | X1 | ADF 37 | count | R | Sys 1 Condenser Fan Stage | S | S | S | S | S | S | S | | | |
| 48 | S2_DBG_CODE | AI_31 | 544 | 03,04 | X1 | ADF 38 | index | R | Sys 2 Debug Code | S | S | S | S | S | S | S | | | |
| 49 | S2_FAN_STAGE | AI_32 | 545 | 03,04 | X1 | ADF 39 | count | R | Sys 2 Condenser Fan Stage | S | S | S | S | S | S | S | | | |
| 50 | CONTROL_MODE | AI_33 | 546 | 03,04 | X1 | ADF 40 | count | R | Unit Control Mode (0=Leaving Water, 1=Return Water, 2=Discharge Air, 3=Suction Press, 4=Cooling, 5=Heating) | S | S | S | S | S | S | S | | | |
| 51 | AR_TIME | AI_34 | 547 | 03,04 | X10 | ADF 41 | seconds | R | Anti-Recycle Time (Programmed) | S | S | S | S | S | S | S | | | |
| 52 | LCHLT_CUT | AI_35 | 548 | 03,04 | X10 | ADF 42 | F° | R | Leaving Chilled Liquid Temp Cutout | S | S | S | S | S | S | S | | | |
| 53 | LOW_AMB_CUT | AI_36 | 549 | 03,04 | X10 | ADF 43 | F° | R | Low Ambient Temperature Cutout | S | S | S | S | S | S | S | | | |
| 54 | SUCT_P_CO_HT | AI_37 | 550 | 03,04 | X10 | ADF 44 | PSIG | R | Low Suction Pressure Cutout Heating (HP Only) | S | S | S | S | S | S | S | | | |
| 55 | L_SUCT_P_CO | AI_38 | 551 | 03,04 | **X10*** | ADF 45 | PSIG | R | Low Suction Pressure Cutout (Cooling on HP units ) | S | S | S | S | S | S | S | | | |
| 56 | H_DSCH_P_CO | AI_39 | 552 | 03,04 | X10 | ADF 46 | PSIG | R | High Discharge Pressure Cutout | S | S | S | S | S | S | S | | | |
| 57 | COOL_SETP | AI_40 | 553 | 03,04 | X10 | ADF 47 | F° | R | Setpoint | S | S | S | S | S | S | S | | | |
| 58 | SP_SETP_S1 | AI_41 | 554 | 03,04 | X10 | ADF 48 | F° | R | Setpoint 1 (SP Control) | S | S | S | S | S | S | S | | | |
| 59 | CONTROL_RG | AI_42 | 555 | 03,04 | X10 | ADF 49 | F° | R | Cooling Range | S | S | S | S | S | S | S | | | |
| 60 | SP_CTL_RG_S1 | AI_43 | 556 | 03,04 | X10 | ADF 50 | F° | R | Cooling Range 1 (SP Control) | S | S | S | S | S | S | S | | | |
| 61 | SP_SETP_S2 | AI_44 | 557 | 03,04 | X10 | ADF 51 | F° | R | Setpoint 2 (SP Control) | S | S | S | S | S | S | S | | | |
| 62 | HEAT_SETP | AI_45 | 558 | 03,04 | X10 | ADF 52 | F° | R | Heating Setpoint (HP Only) | S | S | S | S | S | S | S | | | |
| 63 | SP_CTL_RG_S2 | AI_46 | 559 | 03,04 | X10 | ADF 53 | F° | R | Cooling Range 2 (SP Control) | S | S | S | S | S | S | S | | | |
| 64 | HEAT_RANGE | AI_47 | 560 | 03,04 | X10 | ADF 54 | F° | R | Heating Range (HP Only) | S | S | S | S | S | S | S | | | |
| 65 | S1_DSCH_TEMP | AI_48 | 561 | 03,04 | X10 | ADF 55 | F° | R | Sys 1 Discharge Temperature (EEV Only) | S | S | S | S | S | S | S | | | |
| 66 | S1_DSCH_SHEAT | AI_49 | 562 | 03,04 | X10 | ADF 56 | F° | R | Sys 1 Discharge Superheat (EEV Only) | S | S | S | S | S | S | S | | | |
| 67 | S2_DSCH_TEMP | AI_50 | 563 | 03,04 | X10 | ADF 57 | F° | R | Sys 2 Discharge Temperature (EEV Only) | S | S | S | S | S | S | S | | | |
| 68 | S2_DSCH_SH | AI_51 | 564 | 03,04 | X10 | ADF 58 | F° | R | Sys 2 Discharge Superheat (EEV Only) | S | S | S | S | S | S | S | | | |
| 69 | LEAVING_HOT | AI_52 | 565 | 03,04 | X10 | ADF 59 | F° | R | Leaving Liquid Hot Temp (R-410a) | S | S | S | S | S | S | S | | | |
| 70 | RETURN_HOT | AI_53 | 566 | 03,04 | X10 | ADF 60 | F° | R | Return Liquid Hot Temp (R-410a) | S | S | S | S | S | S | S | | | |
| 71 | R_COOL_SETP | AI_54 | 567 | 03,04 | X10 | ADF 61 | F° | R | Remote Setpoint | N | N | N | N | S | S | S | | | |
| 72 | R_SP_SETP_S1 | AI_55 | 568 | 03,04 | X10 | ADF 62 | F° | R | Remote Setpoint 1 (SP Control) | N | N | N | N | S | S | S | | | |
| 73 | R_SP_SETP_S2 | AI_56 | 569 | 03,04 | X10 | ADF 63 | F° | R | Remote Setpoint 2 (SP Control) | N | N | N | N | S | S | S | | | |
| 74 | R_HEAT_SETP | AI_57 | 570 | 03,04 | X10 | ADF 64 | F° | R | Remote Heating Setpoint (HP and YCWL HP) | N | N | N | N | S | S | S | | | |
| 75 | | | | | | | | | | | | | | | | | | | |
| 76 | **BINARY MONITOR ONLY POINTS** | | | | | | | | | | | | | | | | | | |
| 77 | S1_ALARM | BI_1 | 1282 | 01,02,03 | n/a | BD 4 | 0, 1 | R | Sys 1 Alarm | S | S | S | S | S | S | S | | | |
| 78 | S2_ALARM | BI_2 | 1283 | 01,02,03 | n/a | BD 5 | 0, 1 | R | Sys 2 Alarm | S | S | S | S | S | S | S | | | |
| 79 | EVAP_HTR | BI_3 | 1284 | 01,02,03 | n/a | BD 6 | 0, 1 | R | Evaporator Heater Status | S | S | S | S | S | S | S | | | |
| 80 | EVAP_PUMP | BI_4 | 1285 | 01,02,03 | n/a | BD 7 | 0, 1 | R | Evaporator Pump Status | S | S | S | S | S | S | S | | | |
| 81 | S1_C1_RUN | BI_5 | 1286 | 01,02,03 | n/a | BD 8 | 0, 1 | R | Sys 1 Comp 1 Run | S | S | S | S | S | S | S | | | |
| 82 | S2_C1_RUN | BI_6 | 1287 | 01,02,03 | n/a | BD 9 | 0, 1 | R | Sys 2 Comp 1 Run | S | S | S | S | S | S | S | | | |
| 83 | S1_LLSV | BI_7 | 1288 | 01,02,03 | n/a | BD 10 | 0, 1 | R | Sys 1 Liquid Line Solenoid Valve | S | S | S | S | S | S | S | | | |
| 84 | S1_MODE_SV | BI_8 | 1289 | 01,02,03 | n/a | BD 11 | 0, 1 | R | Sys 1 Mode Solenoid Valve (HP Only) | S | S | S | S | S | S | S | | | |
| 85 | S1_HGBV | BI_9 | 1290 | 01,02,03 | n/a | BD 12 | 0, 1 | R | Sys 1 Hot Gas Bypass Valve | S | S | S | S | S | S | S | | | |
| 86 | S1_BHS | BI_10 | 1291 | 01,02,03 | n/a | BD 13 | 0, 1 | R | Bivalent Heat Source (YLAE HP Only), Tray Heater (YLPA HP only) | S | S | S | S | S | S | S | | | |
| 87 | S1_C2_RUN | BI_11 | 1292 | 01,02,03 | n/a | BD 14 | 0, 1 | R | Sys 1 Comp 2 Run | S | S | S | S | S | S | S | | | |
| 88 | S2_C2_RUN | BI_12 | 1293 | 01,02,03 | n/a | BD 15 | 0, 1 | R | Sys 2 Comp 2 Run | S | S | S | S | S | S | S | | | |
| 89 | S2_LLSV | BI_13 | 1294 | 01,02,03 | n/a | BD 16 | 0, 1 | R | Sys 2 Liquid Line Solenoid Valve | S | S | S | S | S | S | S | | | |
| 90 | S2_MODE_SV | BI_14 | 1295 | 01,02,03 | n/a | BD 17 | 0, 1 | R | Sys 2 Mode Solenoid Valve (HP Only) | S | S | S | S | S | S | S | | | |

Property of JCI/York International. Subject to change without notice

## TABLE 17 - BACNET AND MODBUS COMMUNICATIONS DATA MAP (CONT'D)

| ITEM REF NUM | BACnet NAME | BACnet Object/Instance | MODBUS ADDRESS | MODBUS Data Type Supported | MODBUS Scaling | N2 Metasys | ENG UNITS | READ WRITE | POINT DESCRIPTION | Point List Code S=Standard; O = Optional; N = Not Available | | | | | | | | | |
|---|---|---|---|---|---|---|---|---|---|---|---|---|---|---|---|---|---|---|---|
| | | | | | | | | | | 1 | 2 | 3 | 4 | 5 | 6 | 7 | 8 | 9 | 10 |
| 91 | LEAD_SYS | BI_15 | 1296 | 01,02,03 | n/a | BD 18 | 0, 1 | R | Lead System (0 = Sys 1, 1 = Sys 2) | S | S | S | S | S | S | S | | | |
| 92 | S1_C3_RUN | BI_16 | 1297 | 01,02,03 | n/a | BD 19 | 0, 1 | R | Sys 1 Comp 3 Run | S | S | S | S | S | S | S | | | |
| 93 | S2_C3_RUN | BI_17 | 1298 | 01,02,03 | n/a | BD 20 | 0, 1 | R | Sys 2 Comp 3 Run | S | S | S | S | S | S | S | | | |
| 94 | CH_LIQ_TYPE | BI_18 | 1299 | 01,02,03 | n/a | BD 21 | 0, 1 | R | Chilled Liquid Type (0=Water, 1=Glycol) | S | S | S | S | S | S | S | | | |
| 93 | AMB_MODE | BI_19 | 1300 | 01,02,03 | n/a | BD 22 | 0, 1 | R | Ambient Control Mode (0=Std Amb, 1=Low Amb) | S | S | S | S | S | S | S | | | |
| 94 | CNTL_MODE | BI_20 | 1301 | 01,02,03 | n/a | BD 23 | 0, 1 | R | Local/Remote Control Mode (0=Local, 1=Remote) | S | S | S | S | S | S | S | | | |
| 95 | DATA_UNIT | BI_21 | 1302 | 01,02,03 | n/a | BD 24 | 0, 1 | R | Units (0=Imperial, 1=SI) | S | S | S | S | S | S | S | | | |
| 96 | AUTO_LL | BI_22 | 1303 | 01,02,03 | n/a | BD 25 | 0, 1 | R | Lead/Lag Control Mode (0=Manual, 1=Auto) | S | S | S | S | S | S | S | | | |
| 97 | S2_HGBV | BI_23 | 1304 | 01,02,03 | n/a | BD 26 | 0, 1 | R | Sys 2 HotGas Bypass Valve | N | N | N | N | N | N | N | | | |

**TABLE A**

| Code | Operational Codes |
|---|---|
| 0 | No Abnormal Condition |
| 1 | Unit Switch Off |
| 2 | System Switch Off |
| 3 | Lock-Out |
| 4 | Unit Fault |
| 5 | System Fault |
| 6 | Remote Shutdown |
| 7 | Daily Schedule Shutdown |
| 8 | No Run Permissive |
| 9 | No Cool Load |
| 10 | Anti-Coincidence Timer Active |
| 11 | Anti-Recycle Timer Active |
| 12 | Manual Override |
| 13 | Suction Limiting |
| 14 | Discharge Limiting |
| 15 | Current limiting |
| 16 | Load Limiting |
| 17 | Compressor(s) Running |
| 18 | Heat Pump Load Limiting |
| 19 | |
| 20 | |

**TABLE B**

| Code | Fault Codes | Code | Fault Codes |
|---|---|---|---|
| 0 | No Fault | 21 | Power Failure, Manual Reset Required |
| 1 | VAC Under Voltage | 22 | Unit Motor Current |
| 2 | Low Ambient Temperature | 23 | Low Superheat |
| 3 | High Ambient Temperature | 24 | Sensor Fault |
| 4 | Low Leaving Chilled Liquid Temp | 25 | Discharge Inhibit |
| 5 | High Discharge Pressure | 26 | MP/HPCO Inhibit |
| 6 | High Differential Oil Pressure | 27 | Pump Trip |
| 7 | Low Suction Pressure | 28 | Pump Fail Make Flow |
| 8 | High Motor Current | 29 | High Ambient Temperature |
| 9 | LLSV Not On | 30 | |
| 10 | Low Battery Warning | 31 | |
| 11 | High Oil Temperature | 32 | |
| 12 | High Discharge Temperature | 33 | |
| 13 | Improper Phase Rotation | 34 | |
| 14 | Low Motor Current / MP / HPCO | 35 | |
| 15 | Motor Current Unbalanced | 36 | |
| 16 | Low Differential Oil Pressure | 37 | |
| 17 | Ground Fault | 38 | |
| 18 | MP/HPCO Fault | 39 | |
| 19 | Low Evaporator Temperature | 40 | |
| 20 | Incorrect Refrigerant Programmed | 41 | |

***Note***

**Shaded Codes** may not be available on all models. Please check the Fault and Operational codes against the codes published in your operators manual or confirm Code is available through the display of your unit. If the Code appears in the display, you will recieve that value through the BAS.

**NOTES**

| | |
|---|---|
| 1 | IPU II ( PN 031-02550-xxx ) based equipment are configured for Native BACnet MS/TP and Modbus RTU communications. The Microgateway product is not required for these 2 interfaces |
| 2 | Load Limit Stage 0 = 100% full run ( all compressors ) , 1 = 50% Run ( 4 compressor sys), 1 = 66% Run ( 6 compressor sys), 2 = 0% Run ( 4 compressor sys), 2 = 33% Run ( 6 compressor sys) |
| 3 | BACnet Object Types: 0= Analog In, 1 = Analog Out, 2= Analog Value, 3= Binary In, 4 = Binary Output, 5= Binary Value, 8= Device, 15 = Alarm Notification ( 0 -127 are reserved ASHRAE Objects) |
| 4 | WC= Inches of water column; CFM = Cubic Feer per Minute; FPM = Feet per Minute: PSI = Lbs per square inch; Pa = Pascals; kPa = Kilopascals; PPM = Part Per Million; kJ/kg = Kilojoules per Kilogram |
| 5 | See the applicable Middle Market Chiller Operations Manual for more details |
| 6 | The YCWL uses the same firmware as a YCAL , it just ignores Fan Control |
| 7 | Modbus values are all of type **signed**. Scaling values in 10X BOLD indicate that scaling in Metric is X100. Scaling and signing may not be modified in the field. |
| 8 | |
| 9 | |
| 10 | |

Property of JCI/York International. Subject to change without notice

## Yorktalk 2 Communications

### *Received Data (Control Data)*

The unit receives eight data values from the E-Link Gateway. The first four are analog values and the last four are digital values. These eight data values are used as control parameters when in REMOTE mode. When the unit is in LOCAL mode, these eight values are ignored. If the unit receives no valid YorkTalk 2 transmission for 5 minutes it will revert back to all local control values. Table 18 on page 137 lists the control parameters. These values are found under feature 54 in the E-Link Gateway.

### *Transmitted Data*

After receiving a valid transmission from the E-Link Gateway, the unit will transmit either operational data or history buffer data depending on the "History Buffer Request" on ENG PAGE 10. Data must be transmitted for every page under feature 54. If there is no value to be sent to a particular page, a zero will be sent. *Table 18 on page 137* shows the data values and page listings for this unit.

NOTE

***The latest point map information is listed on the Johnson Controls Equipment Integration website http://my.johnsoncontrols.com/portal/myportal/cg/prod/na/chiller_in***

## TABLE 18 - YORKTALK 2 COMMUNICATIONS DATA MAP

YCAL/YCWL/YLAA/YLUA/YCRL Middle Market w/ 2050, 2550 **York Talk 2** **ELINK** **Micro Board: 031-02050/02550**

| Item | Ref. | Version | Date | YORK P N | Checksum | Baud | COMMENTS |
|---|---|---|---|---|---|---|---|
| 1 | | C.MMC.03.02 | | 031-02049-001 | 944D | 4800 | YCAL Micro Board 031-02050-xxx |
| 2 | | C.MMC.03.01 | | 031-02049-001 | 964B | 4800 | YCAL Micro Board 031-02050-xxx |
| 3 | | C.MMC.03.00 | | 031-02049-001 | 2226 | 4800 | YCAL Micro Board 031-02050-xxx |
| 4 | | C.MMC.13.xx | | flash | xxxx | 4800 | YCAL Micro Board 031-02550-xxx, IPU 2 board. |
| 5 | | C.MMC.13.xx | | flash | xxxx | 4800 | YCWL ( water cooled version) Micro Board 031-02550-xxx, IPU 2 board. |
| 6 | | C.MMC.13.02 | | flash | xxxx | 4800 | Micro Board 031-02550-xxx . Fix native Modbus communications (SCR . Fix Café Metric functionality (SCR-766) |
| 7 | | | | | | | |
| 8 | | | | | | | |
| 9 | | | | | | | |
| 10 | | | | | | | |
| | | Use ASCII page column for interfaces utilizing an ASCII XL Translator or MicroGateway to communicate to a chiller LINC | | | | | |

| ENG PAGE REF | ASCII PAGE REF | York Talk Point Type | LON Profile Name | LON SNVT Type | York Talk Character Position | N2 Address | POINT LIST CODE: S = STANDARD O = OPTIONAL N = NOT AVAILABLE<br>POINT LIST DESCRIPTION | 1 | 2 | 3 | 4 | 5 | 6 | 7 | 8 | 9 | 10 | ENG PAGE REF |
|---|---|---|---|---|---|---|---|---|---|---|---|---|---|---|---|---|---|---|
| P03 | P01 | A. Control | nviYTS01p003 | SNVT_count_f (51) | | ADF 1 | Setpoint | S | S | S | S | S | | | | | | P03 |
| P04 | P02 | A. Control | nviYTS01p004 | SNVT_count_f (51) | | ADF 2 | Load Limit Stage (0, 1, 2) | S | S | S | S | S | | | | | | P04 |
| P05 | P03 | A. Control | nviYTS01p005 | SNVT_count_f (51) | | ADF 3 | Heating Setpoint (HP and YCWL HP) | O | O | O | O | O | | | | | | P05 |
| P06 | P04 | A. Control | nviYTS01p006 | SNVT_count_f (51) | | ADF 4 | Mode (HP and YCWL HP only) (0=Panel, 1= Cooling, 2 = Heating) | O | O | O | O | O | | | | | | P06 |
| P07 | P05 | D. Control | nviYTS01p007 | SNVT_switch (95) | | BD 1 | Start/Stop Command | S | S | S | S | S | | | | | | P07 |
| P08 | P06 | D. Control | nviYTS01p008 | SNVT_switch (95) | | BD 2 | | | | | | | | | | | | P08 |
| P09 | P07 | D. Control | nviYTS01p009 | SNVT_switch (95) | | BD 3 | | | | | | | | | | | | P09 |
| P10 | P08 | D. Control | nviYTS01p010 | SNVT_switch (95) | | BD 4 | History Buffer Request | S | S | S | S | S | | | | | | P10 |
| P11 | P09 | A. Monitor | nvoYTS01p011 | SNVT_count_f (51) | 8 - 11 | ADF 5 | Leaving Chilled Liquid Temp | S | S | S | S | S | | | | | | P11 |
| P12 | P10 | A. Monitor | nvoYTS01p012 | SNVT_count_f (51) | 12 - 15 | ADF 6 | Return Chilled Liquid Temp | S | S | S | S | S | | | | | | P12 |
| P13 | P11 | A. Monitor | nvoYTS01p013 | SNVT_count_f (51) | 16 - 19 | ADF 7 | Leaving Hot Liquid Temp (R-410a) Heat Mode Only | O | O | O | O | O | | | | | | P13 |
| P14 | P12 | A. Monitor | nvoYTS01p014 | SNVT_count_f (51) | 20 - 23 | ADF 8 | Discharge Air Temp ( Cond Unit) Return Hot Liquid Temp (410a- Heat Mod | S | S | S | S | S | | | | | | P14 |
| P15 | P13 | A. Monitor | nvoYTS01p015 | SNVT_count_f (51) | 24 - 27 | ADF 9 | Leaving Liquid Temp Hot (R-410a) | O | O | O | O | O | | | | | | P15 |
| P16 | P14 | A. Monitor | nvoYTS01p016 | SNVT_count_f (51) | 28 - 31 | ADF 10 | Ambient Air Temperature | S | S | S | S | S | | | | | | P16 |
| P17 | P15 | A. Monitor | nvoYTS01p017 | SNVT_count_f (51) | 32 - 35 | ADF 11 | Sys 1 Suction Superheat ( EEV only) | O | O | O | O | O | | | | | | P17 |
| P18 | P16 | A. Monitor | nvoYTS01p018 | SNVT_count_f (51) | 36 - 39 | ADF 12 | Sys 1 Run Time (seconds) | S | S | S | S | S | | | | | | P18 |
| P19 | P17 | A. Monitor | nvoYTS01p019 | SNVT_count_f (51) | 40 - 43 | ADF 13 | Sys 1 Suction Pressure | S | S | S | S | S | | | | | | P19 |
| P20 | P18 | A. Monitor | nvoYTS01p020 | SNVT_count_f (51) | 44 - 47 | ADF 14 | Sys 1 Discharge Pressure | S | S | S | S | S | | | | | | P20 |
| P21 | P19 | A. Monitor | nvoYTS01p021 | SNVT_count_f (51) | 48 - 51 | ADF 15 | Sys 1 Cooler Inlet Refrigerant Temperature(R-407c Only) | S | S | S | S | S | | | | | | P21 |
| P22 | P20 | A. Monitor | nvoYTS01p022 | SNVT_count_f (51) | 52 - 55 | ADF 16 | | | | | | | | | | | | P22 |
| P23 | P21 | A. Monitor | nvoYTS01p023 | SNVT_count_f (51) | 56 - 59 | ADF 17 | Sys 1 EEV Output % (EEV only) | O | O | O | O | O | | | | | | P23 |
| P24 | P22 | A. Monitor | nvoYTS01p024 | SNVT_count_f (51) | 60 - 63 | ADF 18 | Sys 1 Anti- Recycle Timer | S | S | S | S | S | | | | | | P24 |
| P25 | P23 | A. Monitor | nvoYTS01p025 | SNVT_count_f (51) | 64 - 67 | ADF 19 | Anti-Coincident Timer | S | S | S | S | S | | | | | | P25 |
| P26 | P24 | A. Monitor | nvoYTS01p026 | SNVT_count_f (51) | 68 - 71 | ADF 20 | Sys Suction Temp ( EEV only) | O | O | O | O | O | | | | | | P26 |
| P27 | P25 | A. Monitor | nvoYTS01p027 | SNVT_count_f (51) | 72 - 75 | ADF 21 | Sys 2 Run Time (seconds) | S | S | S | S | S | | | | | | P27 |
| P28 | P26 | A. Monitor | nvoYTS01p028 | SNVT_count_f (51) | 76 - 79 | ADF 22 | Sys 2 Suction Pressure | S | S | S | S | S | | | | | | P28 |
| P29 | P27 | A. Monitor | nvoYTS01p029 | SNVT_count_f (51) | 80 - 83 | ADF 23 | Sys 2 Discharge Pressure | S | S | S | S | S | | | | | | P29 |
| P30 | P28 | A. Monitor | nvoYTS01p030 | SNVT_count_f (51) | 84 - 87 | ADF 24 | Sys 2 Cooler Inlet Refrigerant Temperature (R-407c systems Only) | S | S | S | S | S | | | | | | P30 |
| P31 | P29 | A. Monitor | nvoYTS01p031 | SNVT_count_f (51) | 88 - 91 | ADF 25 | Sys 2 Defrost Temperature ( HP only) | O | O | O | O | O | | | | | | P31 |
| P32 | P30 | A. Monitor | nvoYTS01p032 | SNVT_count_f (51) | 92 - 95 | ADF 26 | Sys 2 Suction Superheat (EEV only) | O | O | O | O | O | | | | | | P32 |
| P33 | P31 | A. Monitor | nvoYTS01p033 | SNVT_count_f (51) | 96 - 99 | ADF 27 | Sys 2 Anti-Recycle Timer | S | S | S | S | S | | | | | | P33 |
| P34 | P32 | A. Monitor | nvoYTS01p034 | SNVT_count_f (51) | 100 - 103 | ADF 28 | Sys 2 EEV Output % (EEV only) | O | O | O | O | O | | | | | | P34 |
| P35 | P33 | A. Monitor | nvoYTS01p035 | SNVT_count_f (51) | 104 - 107 | ADF 29 | Number of Compressors | S | S | S | S | S | | | | | | P35 |
| P36 | P34 | D. Monitor | nvoYTS01p036 | SNVT_switch (95) | 108 | BD 5 | Sys 1 Alarm | S | S | S | S | S | | | | | | P36 |
| P37 | P35 | D. Monitor | nvoYTS01p037 | SNVT_switch (95) | 109 | BD 6 | Sys 2 Alarm | S | S | S | S | S | | | | | | P37 |
| P38 | P36 | D. Monitor | nvoYTS01p038 | SNVT_switch (95) | 110 | BD 7 | Evaporator Heater Status | S | S | S | S | S | | | | | | P38 |
| P39 | P37 | D. Monitor | nvoYTS01p039 | SNVT_switch (95) | 111 | BD 8 | Evaporator Pump Status | S | S | S | S | S | | | | | | P39 |
| P40 | P38 | D. Monitor | nvoYTS01p040 | SNVT_switch (95) | 112 | BD 9 | Sys 1 Compressor 1 Run | S | S | S | S | S | | | | | | P40 |
| P41 | P39 | D. Monitor | nvoYTS01p041 | SNVT_switch (95) | 113 | BD 10 | Sys 2 Compressor 1 Run | S | S | S | S | S | | | | | | P41 |
| P42 | P40 | D. Monitor | nvoYTS01p042 | SNVT_switch (95) | 114 | BD 11 | Sys 1 Liquid Line Solenoid Valve | S | S | S | S | S | | | | | | P42 |

**TABLE 18 -** YORKTALK 2 COMMUNICATIONS DATA MAP (CONT'D)

| ENG PAGE REF | ASCII PAGE REF | York Talk Point Type | LON Profile Name | LON SNVT Type | York Talk Character Position | N2 Address | POINT LIST CODE: S = STANDARD O = OPTIONAL N = NOT AVAILABLE<br>POINT LIST DESCRIPTION | 1 | 2 | 3 | 4 | 5 | 6 | 7 | 8 | 9 | 10 | ENG PAGE REF |
|---|---|---|---|---|---|---|---|---|---|---|---|---|---|---|---|---|---|---|
| P43 | P41 | D. Monitor | nvoYTS01p043 | SNVT_switch (95) | 115 | BD 12 | Sys 1 Hot Gas Bypass Valve | S | S | S | S | S | | | | | | P43 |
| P44 | P42 | D. Monitor | nvoYTS01p044 | SNVT_switch (95) | 116 | BD 13 | Sys 1 Compressor 2 Run | S | S | S | S | S | | | | | | P44 |
| P45 | P43 | D. Monitor | nvoYTS01p045 | SNVT_switch (95) | 117 | BD 14 | Sys 2 Compressor 2 Run | S | S | S | S | S | | | | | | P45 |
| P46 | P44 | D. Monitor | nvoYTS01p046 | SNVT_switch (95) | 118 | BD 15 | Sys 2 Liquid Line Solenoid Valve | S | S | S | S | S | | | | | | P46 |
| P47 | P45 | D. Monitor | nvoYTS01p047 | SNVT_switch (95) | 119 | BD 16 | Lead System (0 = Sys 1, 1 = Sys 2) | S | S | S | S | S | | | | | | P47 |
| P48 | P46 | D. Monitor | nvoYTS01p048 | SNVT_switch (95) | 120 | BD 17 | Sys 1 Compressor 3 Run | S | S | S | S | S | | | | | | P48 |
| P49 | P47 | D. Monitor | nvoYTS01p049 | SNVT_switch (95) | 121 | BD 18 | Sys 2 Compressor 3 Run | S | S | S | S | S | | | | | | P49 |
| P50 | P48 | D. Monitor | nvoYTS01p050 | SNVT_switch (95) | 122 | BD 19 | Chilled Liquid Type (0=Water, 1=Glycol) | S | S | S | S | S | | | | | | P50 |
| P51 | P49 | D. Monitor | nvoYTS01p051 | SNVT_switch (95) | 123 | BD 20 | Ambient Control Mode (0=Std Amb, 1=Low Amb) | S | S | S | S | N | | | | | | P51 |
| P52 | P50 | D. Monitor | nvoYTS01p052 | SNVT_switch (95) | 124 | BD 21 | Local/Remote Control Mode (0=Local, 1=Remote) | S | S | S | S | S | | | | | | P52 |
| P53 | P51 | D. Monitor | nvoYTS01p053 | SNVT_switch (95) | 125 | BD 22 | Units (0=Imperial, 1=SI) | S | S | S | S | S | | | | | | P53 |
| P54 | P52 | D. Monitor | nvoYTS01p054 | SNVT_switch (95) | 126 | BD 23 | Lead/Lag Control Mode (0=Manual, 1=Auto) | S | S | S | S | S | | | | | | P54 |
| P55 | P53 | D. Monitor | nvoYTS01p055 | SNVT_switch (95) | 127 | BD 24 | Sys 2 Hot Gas Bypass Valve | S | S | S | S | S | | | | | | P55 |
| P56 | P54 | Code Monitor | nvoYTS01p056 | SNVT_count_f (51) | 128 | ADI 1 | *Sys 1 Operational Code | S | S | S | S | S | | | | | | P56 |
| P57 | P55 | Code Monitor | nvoYTS01p057 | SNVT_count_f (51) | 129 | ADI 2 | *Sys 1 Fault Code | S | S | S | S | S | | | | | | P57 |
| P58 | P56 | Code Monitor | nvoYTS01p058 | SNVT_count_f (51) | 130 | ADI 3 | *Sys 2 Operational Code | S | S | S | S | S | | | | | | P58 |
| P59 | P57 | Code Monitor | nvoYTS01p059 | SNVT_count_f (51) | 131 | ADI 4 | *Sys 2 Fault Code | S | S | S | S | S | | | | | | P59 |
| P60 | P58 | Code Monitor | nvoYTS01p060 | SNVT_count_f (51) | 132 | ADI 5 | | S | S | S | S | S | | | | | | P60 |
| P61 | P59 | Code Monitor | nvoYTS01p061 | SNVT_count_f (51) | 133 | ADI 6 | Sys 1 Condenser Fan Stage | S | S | S | S | S | | | | | | P61 |
| P62 | P60 | Code Monitor | nvoYTS01p062 | SNVT_count_f (51) | 134 | ADI 7 | | S | S | S | S | S | | | | | | P62 |
| P63 | P61 | Code Monitor | nvoYTS01p063 | SNVT_count_f (51) | 135 | ADI 8 | Sys 2 Condenser Fan Stage | S | S | S | S | S | | | | | | P63 |
| P64 | P62 | Code Monitor | nvoYTS01p064 | SNVT_count_f (51) | 136 | ADI 9 | | | | | | | | | | | | P64 |
| P65 | P63 | Code Monitor | nvoYTS01p065 | SNVT_count_f (51) | 137 | ADI 10 | Unit Control Mode (0=Lv Wtr, 1=Ret Wtr, 2=Dis Air, 3=SP, 4=Cool, 5=Heat | S | S | S | S | S | | | | | | P65 |
| P66 | P64 | A. Monitor | nvoYTS01p066 | SNVT_count_f (51) | 138 - 141 | ADF 30 | Anti-Recycle Time (Programmed) | S | S | S | S | S | | | | | | P66 |
| P67 | P65 | A. Monitor | nvoYTS01p067 | SNVT_count_f (51) | 142 - 145 | ADF 31 | Leaving Chilled Liquid Temp Cutout | S | S | S | S | S | | | | | | P67 |
| P68 | P66 | A. Monitor | nvoYTS01p068 | SNVT_count_f (51) | 146 - 149 | ADF 32 | Low Ambient Temperature Cutout | S | S | S | S | S | | | | | | P68 |
| P69 | P67 | A. Monitor | nvoYTS01p069 | SNVT_count_f (51) | 150 - 153 | ADF 33 | Low Suction Pressure Cutout (Heating HP Only) | S | S | S | S | S | | | | | | P69 |
| P70 | P68 | A. Monitor | nvoYTS01p070 | SNVT_count_f (51) | 154 - 157 | ADF 34 | Low Suction Pressure Cutout (Cooling HP only) | S | S | S | S | S | | | | | | P70 |
| P71 | P69 | A. Monitor | nvoYTS01p071 | SNVT_count_f (51) | 158 - 161 | ADF 35 | High Discharge Pressure Cutout | S | S | S | S | S | | | | | | P71 |
| P72 | P70 | A. Monitor | nvoYTS01p072 | SNVT_count_f (51) | 162 - 165 | ADF 36 | Remote Setpoint | S | S | S | S | S | | | | | | P72 |
| P73 | P71 | A. Monitor | nvoYTS01p073 | SNVT_count_f (51) | 166 - 169 | ADF 37 | Cooling Range | S | S | S | S | S | | | | | | P73 |
| P74 | P72 | A. Monitor | nvoYTS01p074 | SNVT_count_f (51) | 170 - 173 | ADF 38 | Remote Setpnt 2 ( SP Control), Remote Heatng Setpnt ( HP and YCWL HP | O | O | O | O | O | | | | | | P74 |
| P75 | P73 | A. Monitor | nvoYTS01p075 | SNVT_count_f (51) | 174 - 177 | ADF 39 | Cool Range Setpoint 2 (SP Control), Heat Range (HP and YCWL HP only) | O | O | O | O | O | | | | | | P75 |
| P76 | P74 | A. Monitor | nvoYTS01p076 | SNVT_count_f (51) | 178 - 181 | ADF 40 | Sys 1 Discharge Temp (EEV only) | O | O | O | O | O | | | | | | P76 |
| P77 | P75 | A. Monitor | nvoYTS01p077 | SNVT_count_f (51) | 182 - 185 | ADF 41 | Sys 1 Discharge Superheat (EEV only) | O | O | O | O | O | | | | | | P77 |
| P78 | P76 | A. Monitor | nvoYTS01p078 | SNVT_count_f (51) | 186 - 189 | ADF 42 | Sys 2 Discharge Temp (EEV only) | O | O | O | O | O | | | | | | P78 |
| P79 | P77 | A. Monitor | nvoYTS01p079 | SNVT_count_f (51) | 190 - 193 | ADF 43 | Sys 2 Discharge Superheat (EEV only) | O | O | O | O | O | | | | | | P79 |
| P80 | P78 | D. Monitor | nvoYTS01p080 | SNVT_switch (95) | 194 | BD 25 | | | | | | | | | | | | P80 |
| P81 | P79 | D. Monitor | nvoYTS01p081 | SNVT_switch (95) | 195 | BD 26 | | | | | | | | | | | | P81 |
| P82 | P80 | D. Monitor | nvoYTS01p082 | SNVT_switch (95) | 196 | BD 27 | | | | | | | | | | | | P82 |
| P83 | P81 | D. Monitor | nvoYTS01p083 | SNVT_switch (95) | 197 | BD 28 | | | | | | | | | | | | P83 |
| P84 | P82 | D. Monitor | nvoYTS01p084 | SNVT_switch (95) | 198 | BD 29 | | | | | | | | | | | | P84 |

NOTE: The Appropriate Product Code Listing Summary Should Accompany Document

**TABLE 18 -** YORKTALK 2 COMMUNICATIONS DATA MAP (CONT'D)

| ENG PAGE | ASCII PAGE | Operational Code | ENG PAGE | ASCII PAGE | Fault Code | | | |
|---|---|---|---|---|---|---|---|---|
| **P56** | **P54** | **C_OPER.CODE** | **P57** | **P55** | **C_FAULT.CODE** | | | |
| 0 | 0 | No Abnormal Condition | 0 | 0 | No Fault Code | | | |
| 1 | 1 | Unit Switch Off | 1 | 1 | VAC Undervoltage | | | |
| 2 | 2 | System Switch Off | 2 | 2 | Low Ambient Temperature | | | |
| 3 | 3 | Lock-Out | 3 | 3 | High Ambient Temperature | | | |
| 4 | 4 | Unit Fault | 4 | 4 | Low Leaving Chilled Liquid Temperature | | | |
| 5 | 5 | System Fault | 5 | 5 | High Discharge Pressure | | | |
| 6 | 6 | Remote Shutdown | 6 | 6 | High Differential Oil Pressure | | | |
| 7 | 7 | Daily Schedule Shutdown | 7 | 7 | Low Suction Pressure | | | |
| 8 | 8 | No Run Permissive | 8 | 8 | High Motor Current | | | |
| 9 | 9 | No Cool Load | 9 | 9 | LLSV Not On | | | |
| 10 | 10 | Anti-Coincidence Timer Active | 10 | 10 | Low Battery Warning | | | |
| 11 | 11 | Anti-Recycle Timer Active | 11 | 11 | High Oil Temperature | | | |
| 12 | 12 | Manual Override | 12 | 12 | High Discharge Temperature | | | |
| 13 | 13 | Suction Limiting | 13 | 13 | Improper Phase Rotation | | | |
| 14 | 14 | Discharge Limiting | 14 | 14 | Low Motor Current / MP / HPCO | | | |
| 15 | 15 | Current Limiting | 15 | 15 | Motor Current Inpomabalanced | | | |
| 16 | 16 | Load Limiting | 16 | 16 | Low Differntail Oil Pressure | | | |
| 17 | 17 | Compressor(s) Running | 17 | 17 | Grpound Fault | | | |
| 18 | 18 | Heat Pump Load Limiting ( HP Only) | 18 | 18 | MP / HPCO Fault | | | |
| | | | 19 | 19 | Low Evaporator Temperature | | | |
| | | | 20 | 20 | Incorrect Refrigernat Programmed | | | |
| | | | 21 | 21 | Power Failure, Manual Reset Required | | | |
| | | | 22 | 22 | Unit Motor Current | | | |
| | | | 23 | 23 | Low Superheat | | | |
| | | | 24 | 24 | Sensor Fault | | | |
| | | | 25 | 25 | Discharge Inhibit | | | |
| | | | 26 | 26 | MP/HPCO Inhibit | | | |
| | | | 27 | 27 | Pump Trip | | | |
| | | | 28 | 28 | Pump Fail Make Flow | | | |
| | | | 29 | 29 | High Ambient Temperature | | | |

**** Note***

**Shaded Codes** may not be available on all models. Please check the Fault and Operational codes against the codes published in your operators manual or confirm Code is available through the display of your unit. If the Code appears in the display, you will recieve that value through the BAS.

THIS PAGE INTENTIONALLY LEFT BLANK

# SECTION 8 – UNIT OPERATION

## Unit Operating Sequence

The operating sequence described below relates to operation on a hot water start after power has been applied, such as start-up commissioning. When a compressor starts, internal timers limit the minimum time before another compressor can start to 1 minute.

1. For the chiller system to run, the Flow Switch must be closed, any remote cycling contacts must be closed, the Daily Schedule must not be scheduling the chiller OFF, and temperature demand must be present.
2. When power is applied to the system, the microprocessor will start a 2 minute timer. This is the same timer that prevents an instantaneous start after a power failure.
3. At the end of the 2 minute timer, the microprocessor will check for cooling demand. If all conditions allow for start, a compressor on the lead system will start and the liquid line solenoid will open. Coincident with the start, the anti-coincident timer will be set and begin counting downward from “60” seconds to “0” seconds.

   If the unit is programmed for Auto Lead/Lag, the system with the shortest average run-time of the compressors will be assigned as the “lead” system. A new lead/lag assignment is made whenever all systems shut down.
4. Several seconds after the compressor starts, that systems first condenser fan will be cycled ON (outdoor air temperature more than 25 °F (-4 °C) or discharge pressure). See *Standard Condenser Fan Control on page 146* for details concerning condenser fan cycling.
5. After 1 minute of compressor run time, the next compressor in sequence will start when a system has to load. Additional compressors will be started at 60 second intervals as needed to satisfy temperature setpoint.
6. If demand requires, the lag system will cycle ON with the same timing sequences as the lead system after the lead system has run for five minutes. Refer to the section on Capacity Control for a detailed explanation of system and compressor staging.
7. As the load decreases below setpoint, the compressors will be shut down in sequence. This will occur at intervals of either 60, 30, or 20 seconds based on water temperature as compared to setpoint, and control mode. See *Leaving Chilled Liquid Control on page 142* for a detailed explanation.
8. When the last compressor in a “system” (two or three compressors per system), is to be cycled OFF, the system will initiate a pump-down. Each “system” has a pump-down feature upon shut-off. On a non-safety, non-unit switch shutdown, the LLSV will be turned OFF and the last compressor will be allowed to run until the suction pressure falls below the suction pressure cutout or for 180 seconds, whichever comes first.

### CAPACITY CONTROL

To initiate the start sequence of the chiller, all run permissive inputs must be satisfied (flow/remote start/stop switch), and no chiller or system faults exist.

The first phase of the start sequence is initiated by the Daily Schedule Start or any Remote Cycling Device. If the unit is shut down on the daily schedule, the chilled water pump contacts (Terminals 23 and 24 of XTBC2) will close to start the pump when the daily schedule start time has been reached. Once flow has been established and the flow switch closes, capacity control functions are initiated, if the remote cycling contacts wired in series with the flow switch are closed.

It should be noted that the chilled water pump contacts (Terminals 23 and 24 of XTBC2) are not required to be used to cycle the chilled water pump. However, in all cases the flow switch must be closed to allow unit operation.

The control system will evaluate the need for cooling by comparing the actual leaving or return chilled liquid temperature to the desired setpoint, and regulate the leaving or return chilled liquid temperature to meet that desired setpoint.

## SUCTION PRESSURE LIMIT CONTROLS

The anticipatory controls are intended to prevent the unit from ever actually reaching a low-pressure cutout. Loading is prevented, if the suction pressure drops below 1.15 x suction pressure cutout (15% below the cutout). Loading may reoccur after suction pressure rises above the unload point and a period of one minute elapses. This control is only operable if the optional suction pressure transducers are installed.

## DISCHARGE PRESSURE LIMIT CONTROLS

The discharge pressure limit controls unload a system before it reaches a safety limit due to high load or dirty condenser coils. The microprocessor monitors discharge pressure and unloads a system, if fully loaded, by one compressor when discharge pressure exceeds the programmed cutout minus 10 PSIG (0.69 barg). Reloading will occur when the discharge pressure on the affected system drops to 85% of the unload pressure and 10 minutes have elapsed.

This control is only applicable if optional discharge pressure transducers are installed.

## LEAVING CHILLED LIQUID CONTROL

The setpoint, when programmed for Leaving Chilled Liquid Control, is the temperature the unit will control to within plus or minus the (control) cooling range. The Setpoint High Limit is the Setpoint plus the Cooling Range. The Setpoint Low Limit is the Setpoint minus the Cooling Range. Figure 30 below should be used to aid in understanding the following description of Leaving Chilled Liquid Control.

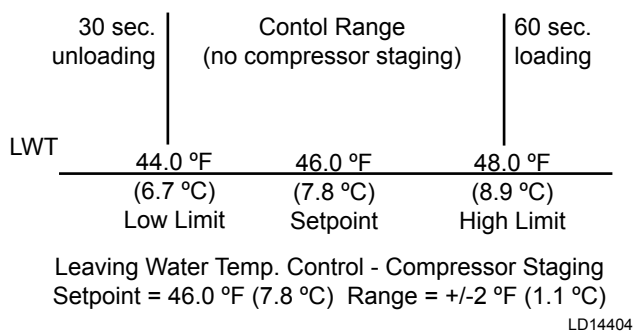


**FIGURE 28 -** LEAVING WATER TEMPERATURE CONTROL EXAMPLE

If the leaving chilled liquid temperature is above the Setpoint High Limit, the lead compressor on the lead system will be energized along with the liquid line solenoid. Upon energizing any compressor, the 60 second Anti-Coincidence timer will be initiated to prevent multiple compressors from turning ON.

If after 60 seconds of run-time the leaving chilled liquid temperature is still above the Setpoint High Limit, the next compressor in sequence will be energized. Additional compressors will be energized at a rate of once every 60 seconds if the chilled liquid temperature remains above the Setpoint High Limit and the chilled liquid temperature is dropping less than 3 °F/min. The lag system will not be allowed to start a compressor until the lead system has run for 5 minutes.

If the chilled liquid temperature falls below the Setpoint High Limit but is greater than the Setpoint Low Limit, loading and unloading do not occur. This area of control is called the control range.

If the chilled liquid temperature drops to between Setpoint Low Limit and 0.5 °F (0.28 °C) below the Setpoint Low Limit, unloading (a compressor turns OFF) occurs at a rate of 1 every 30 seconds. If the chilled liquid temperature falls to a value greater than 0.5 °F (0.28 °C) below the Setpoint Low Limit but not greater than 1.5 °F (0.83 °C) below the Setpoint Low Limit, unloading occurs at a rate of 20 seconds. If the chilled liquid temperature falls to a value greater than 1.5 °F (0.83 °C) below the Setpoint Low Limit, unloading occurs at a rate of 10 seconds. If the chilled liquid temperature falls below 1 °F above the low chilled liquid temperature cutout, unloading occurs at a rate of 10 seconds if it is greater than 10 seconds.

In water cooling mode on R-410A chillers, the minimum low limit of the control range will be 40.0ºF. For leaving chilled liquid temperature setpoint and control range combinations that result in the low limit of the control range being below 40.0ºF, the low limit will be reset to 40.0ºF and the difference will be added to the high limit. This will result in a control range the same size as programmed but not allow the unit to run below 40.0ºF. This control will not affect glycol chillers.

Hot gas, if present, will be the final step of capacity. Hot gas is energized when only a single compressor is running and LWT is less than SP. Hot gas is turned OFF as temperature rises when LWT is more than SP plus CR/2. If temperature remains below the setpoint low limit on the lowest step of capacity, the microprocessor will close the liquid line solenoid, after turning off hot gas, and pump the system down before turning off the last compressor in a system.

The leaving chilled liquid setpoint is programmable from 40 °F to 70 °F (4.4 °C to 21.1 °C) in water chilling mode and from 10 °F to 70 °F (-12.2 °C to 21.1 °C) in glycol chilling mode. In both modes, the cooling range can be from plus or minus1.5 °F to plus or minus2.5 °F (plus or minus.83 °C to 1.39 °C).leaving chilled liquid control.

**TABLE 19 -** SAMPLE COMPRESSOR STAGING FOR RETURN WATER CONTROL

| COMPRESSOR STAGING FOR RETURN WATER CONTROL | | | | | | |
|---|---|---|---|---|---|---|
| 4 COMPRESSOR<br>COOLING SETPOINT = 45 °F (7.2 °C) RANGE = 10 °F (5.6 °C) | | | | | | |
| **# OF COMP ON** | **0** | *** 1+HG** | **1** | **2** | **3** | **4** |
| RWT | 45 °F (7.2 °C) | 46.25 °F (7.9 °C) | 47.5 °F (8.6 °C) | 50.0 °F (10.0 °C) | 52.5 °F (11.4 °C) | 55.0 °F (12.8 °C) |

*Unloading only

## LEAVING CHILLED LIQUID CONTROL OVERRIDE TO REDUCE CYCLING

To avoid compressor cycling the microprocessor will adjust the setpoint upward temporarily. The last run time of the system will be saved. If the last run time was greater than 5 minutes, no action is to be taken. If the last run time for the lead system was less than 5 minutes, the microprocessor will increase the setpoint high limit according to the chart at right, with a maximum value allowed of 50 °F (see Figure 29 on page 152).

If adding the setpoint adjust value to the setpoint high limit causes the setpoint high limit to be greater than 50 °F, the setpoint high limit will be set to 50 °F, and the difference will be added to the setpoint low limit.

Once a system runs for greater than 5 minutes, the setpoint adjust will be set back to 0. This will occur while the system is still running.

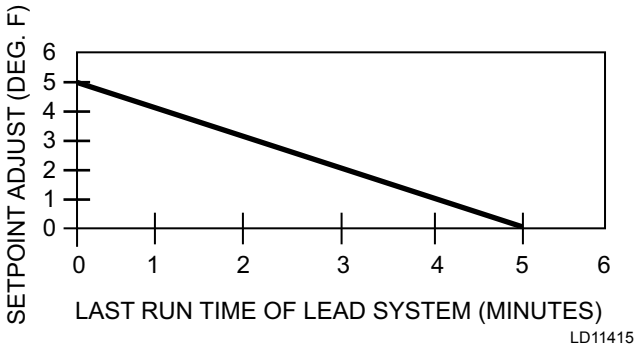


**FIGURE 29 -** SETPOINT ADJUST

**TABLE 20 -** RETURN CHILLED LIQUID CONTROL FOR 4 COMPRESSORS (6 STEPS)

| *STEP | COMPRESSOR | COMPRESSOR ON POINT | COMPRESSOR OFF POINT |
|---|---|---|---|
| **0** | 0 | SETPOINT | SETPOINT |
| **1** | 1 W/HGB | SP + CR/8 (Note 1) | SETPOINT |
| **2** | 1 NO HGB | SP + CR/4 | SP + CR/8 |
| **3** | 2 | SP + 2*CR/4 (Note 2) | SP + CR/4 |
| **4** | 2 | SP + 2*CR/4 | SP + CR/4 (Note 3) |
| **5** | 3 | SP + 3*CR/4 | SP + 2*CR/4 |
| **6** | 4 | SP + CR | SP + 3*CR/4 |

**NOTES:**
1. Step 1 is Hot Gas Bypass and is skipped when loading occurs. Hot Gas Bypass operation is inhibited during Pumpdown.
2. Step 3 is skipped when loading occurs.
3. Step 4 is skipped when unloading occurs.
* STEP can be viewed using the OPER DATA key and scrolling to COOLING DEMAND.

## LEAVING CHILLED LIQUID SYSTEM LEAD/ LAG AND COMPRESSOR SEQUENCING

A Lead/Lag option may be selected to help equalize average run hours between systems with 2 refrigerant systems. This may be programmed under the OPTIONS key. Auto Lead/Lag allows automatic Lead/ Lag of the two systems based on average run hours of the compressors in each system. Manual Lead/Lag selects specifically the sequence which the microprocessor starts systems.

On a hot water start, once a system starts, it will turn ON all compressors before the next system starts a compressor. The microprocessor will sequence compressors within each circuit to maximize individual compressor run time on individual compressors within a system to prevent short cycling.

Each compressor in a system will be assigned an arbitrary priority number 1, 2, or 1, 2, 3. The non-running compressor within a system with the lowest priority number will always be the next compressor to start. The running compressor with priority number 1 will always be the next to shut OFF. Whenever a compressor is shut OFF, the priority numbers of all compressors will be decreased by 1 with wrap-around. This control scheme assures the same compressor does not repeatedly cycle ON and OFF.

Once the second system starts a compressor on a 2 system chillers, the microprocessor will attempt to equally load each system as long as the system is not limiting or pumping down. Once this occurs, loading and unloading will alternate between systems, loading the lead system first or unloading the lag system first.

## RETURN CHILLED LIQUID CONTROL

### (Can be used on Dual System 4, 5 and 6 Comp Units Only)

Return chilled liquid control is based on staging the compressors to match the cooling load. The chiller will be fully loaded when the return water temperature is equal to the Cooling Setpoint plus the Range. The chiller will be totally unloaded (all compressors OFF) when the return water temperature is equal to the Cooling Setpoint (See sample in *Table 19 on page 143*). At return water temperatures between the Cooling Setpoint and Cooling Setpoint plus Range, compressor loading and unloading will be determined by the formulas in *Table 20 on page 143*.

NOTE

***Return Chilled Liquid Control MUST only be used when constant chilled liquid flow is ensured.***

***The range MUST always be programmed to equal the temperature drop across the evaporator when the chiller is "fully loaded". Otherwise, chilled liquid temperature will over or under shoot. Variable flow must never be used in return chilled liquid mode.***

Normal loading will occur at intervals of 60 seconds according to the temperatures determined by the formulas. Unloading will occur at a rate of 30 seconds according to the temperatures determined in the formulas used to calculate the ON and OFF points for each step of capacity.

The return chilled liquid setpoint is programmable from 40 °F to 70 °F (4.4 °C to 21.1 °C) in water chilling mode and from 10 °F to 70 °F (-12.2 °C to 21.1 °C) in glycol chilling mode. In both modes, the cooling range can be from 4 °F to 20 °F (2.2° to 11.1 °C).

**TABLE 21 -** LEAD/LAG RETURN CHILLED LIQUID CONTROL FOR 4 COMPRESSORS (6 STEPS)

| | LEAD SYSTEM | | | | LAG SYSTEM | | |
|---|---|---|---|---|---|---|---|
| **STEP** | **COMP 1** | **COMP 2** | **-** | | **COMP 1** | **COMP 2** | **-** |
| **0** | OFF | OFF | - | | OFF | OFF | - |
| **1** | ON + HG | OFF | - | *SEE NOTE 1* | OFF | OFF | - |
| **2** | ON | OFF | - | | OFF | OFF | - |
| **3** | ON | OFF | - | *SEE NOTE 2* | ON | OFF | - |
| **4** | ON | ON | - | *SEE NOTE 3* | OFF | OFF | - |
| **5** | ON | ON | - | | ON | OFF | - |
| **6** | ON | ON | - | | ON | ON | - |

**NOTES** 1. Step is Hot Gas Bypass and is skipped when loading occurs. Hot Gas Bypass operation is inhibited during pumpdown. For Leaving Chilled Liquid Control the Hot Gas Bypass solenoid is energized only when the lead compressor is running and the LWT < SP, the Hot Gas Bypass solenoid is turned off when the LWT more than SP + CR/2.
2. Step 3 is skipped when loading occurs.
3. Step 4 is skipped when unloading occurs.

As an example of compressor staging (refer to *Table 20 on page 143*), a chiller with six compressors using a Cooling Setpoint programmed for 45 °F (7.20 °C) and a Range Setpoint of 10 °F (5.56 °C). Using the formulas in *Table 20 on page 143*, the control range will be split up into six (seven including hot gas) segments, with the Control Range determining the separation between segments. Note also that the Cooling Setpoint is the point at which all compressors are OFF, and Cooling Setpoint plus Range is the point all compressors are ON. Specifically, if the return water temperature is 55 °F (12.8 °C), then all compressors will be ON, providing full capacity. At nominal gpm, this would provide approximately 45 °F (7.2 °C) leaving water temperature out of the evaporator.

If the return water temperature drops to 53.4 °F (11.9 °C), one compressor would cycle OFF leaving five compressors running. The compressors would continue to cycle OFF approximately every 1.7 °F (.94 °C), with the exception of hot gas bypass. Notice that the hot gas bypass would cycle ON when the return water temperature dropped to 46.25 °F (7.9 °C). At this point one compressor would be running with hot gas.

Should the return water temperature rise from this point to 46.7 °F (8.2 °C), the hot gas bypass would shut OFF, still leaving one compressor running. As the load increased, the compressors would stage ON every 1.7 °F (.94 °C).

Also note that *Table 20 on page 143* not only provides the formulas for the loading (ON POINT) and unloading (OFF POINT) of the system, the "STEP" is also shown in the table. The "STEP" is the increment in the sequence of the capacity control scheme that can be viewed under the OPER DATA key. Refer to *Display/ Print Keys on page 107* for specific information on the OPER DATA key.

## RETURN CHILLED LIQUID SYSTEM LEAD/ LAG AND COMPRESSOR SEQUENCING

A Lead/Lag option may be selected to help equalize average run hours between systems with 2 refrigerant systems. This may be programmed under the OPTIONS key. Auto Lead/Lag of the 2 systems based on average run hours of the compressors in each system. Manual Lead/Lag selects specifically the sequence which the microprocessor starts the systems.

The microprocessor will sequence compressors load and unload systems according to *Table 21 on page 144*. The microprocessor will lead/lag compressors within each circuit to maximize individual compressor run time for the purpose of lubrication. It will also prevent the same compressor from starting 2 times in a row. The microprocessor will not attempt to equalize run time on individual compressors within a system.

Each compressor in a system will be assigned an arbitrary number 1, or 2. The non-running compressor within a system with the lowest priority number will always be the next compressor to start. The running compressor with priority number 1 will always be the next compressor to shut OFF. Whenever a compressor is shut OFF, the priority numbers of all compressors in each system will be decreased by 1 with the wrap around. This control scheme assures the same compressor does not repeatedly cycle ON and OFF.

## ANTI-RECYCLE TIMER

The programmable anti-recycle timer assures that systems do not cycle. This timer is programmable under the PROGRAM key between 300 and 600 seconds. Whenever possible, to reduce cycling and motor heating, the anti-recycle timer should be adjusted to 600 seconds. The programmable anti-recycle timer starts the timer when the first compressor in a system starts. The timer begins to count down. If all of the compressors in a circuit cycle OFF, a compressor within the circuit will not be permitted to start until the anti-recycle timer has timed out. If the lead system has run for less than 5 minutes, 3 times in a row, the anti-recycle timer will be extended to 10 minutes.

## ANTI-COINCIDENCE TIMER

This timer is not present on single-system units. Two timing controls are present in software to assure compressors within a circuit or between systems, do not start simultaneously. The anti-coincidence timer assures there is at least a one minute delay between system starts on 2-circuit systems. This timer is NOT programmable. The load timers further assure that there is a minimum time between compressor starts within a system.

## EVAPORATOR PUMP CONTROL AND YORK HYDRO KIT PUMP CONTROL

The evaporator pump dry contacts (XTBC2 – Terminals 23 and 24) are energized when any of the following conditions are true:

1. Low Leaving Chilled Liquid Fault
2. Any compressor is running
3. Daily Schedule is ON, Unit Switch is ON and Remote Stop is closed

The pump will not run if the microprocessor panel has been powered up for less than 30 seconds or if the pump has run in the last 30 seconds to prevent pump motor overheating.

Whenever the option "YORK HYDRO KIT PUMPS = 1" is selected under the OPTIONS key, the pump control will be as described above. DO NOT SELECT the option "YORK HYDRO KIT PUMPS = 2" under the OPTIONS key. If a dual pump option is installed, the active pump is selected by the selector switch.

## EVAPORATOR HEATER CONTROL

The evaporator heater is controlled by ambient air temperature. When the ambient temperature drops below 40 °F (4.4 °C) the heater is turned ON. When the temperature rises above 45 °F (7.2 °C) the heater is turned OFF. An under voltage condition will keep the heater OFF until full voltage is restored to the system.

## PUMPDOWN CONTROL

Each system has a pump-down feature upon shut-off. Manual pumpdown from the keypad is not possible. On a non-safety, non-unit switch shutdown, all compressors but one in the system will be shut OFF. The LLSV will also be turned OFF. The final compressor will be allowed to run until the suction pressure falls below the cutout, or for 180 seconds, whichever comes first.

## STANDARD CONDENSER FAN CONTROL

Condenser fan operation must be programmed with the OPTIONS key under "Fan Control." Condenser fan must be selected for Discharge Pressure only. Fan control by discharge pressure will work according to the tables on the following pages (see *Table 22 on page 147* and *Table 23 on page 148*). The fan control on pressure and fan differential off-pressure are programmable under the PROGRAM key. Standard fan control operates down to a temperature of 25° F.

The delay between turning ON and OFF fan stages is always fixed at 5 seconds.

When a fan stage is turned ON by pressure, the on pressure for the next stage is increased 20 PSIG and ramped back to the programmed on pressure over the next 20 seconds. Typically, standard ambient control on pressure should be programmed at 385 PSIG with a differential of 125 PSIG.

When a fan stage is turned OFF (programmed on pressure minus programmed differential), the off pressure for the next stage is decreased 20 PSIG and ramped back to the programmed off pressure minus the differential over the next 20 seconds.

Condenser fan locations are shown in *Figure 30 on page 146*. Detailed Standard Fan Control operation is shown in *Table 22 on page 147* and *Table 23 on page 148*.

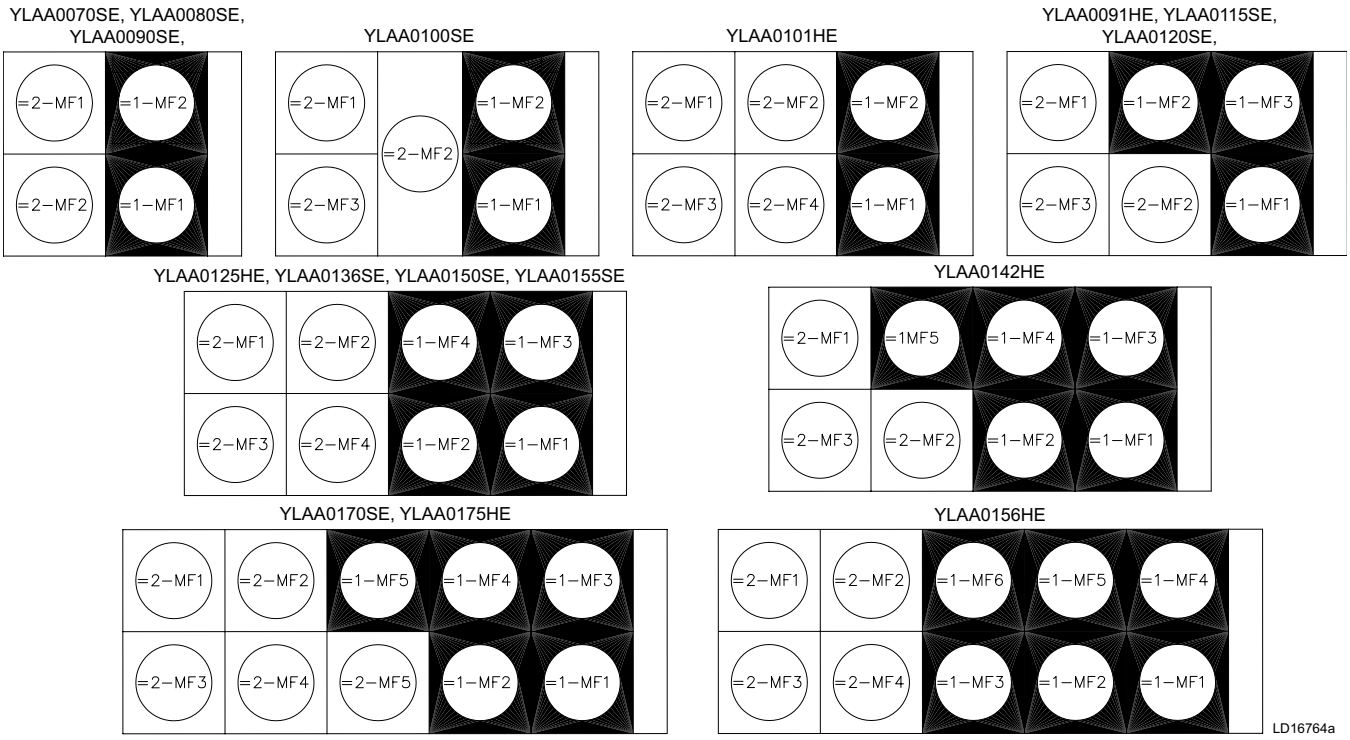


**FIGURE 30 -** CONDENSER FAN LOCATIONS

**TABLE 22 -** YLAA STANDARD CONDENSER FAN CONTROL USING DISCHARGE PRESSURE ONLY (2, 3, OR 4 FANS PER SYSTEM)

| FAN STAGE | ON* | OFF** | IPUII I/O OUTPUT | | FAN CONTACTOR | | FAN # | |
|---|---|---|---|---|---|---|---|---|
| | | | SYS 1 | SYS 2 | SYS 1 | SYS 2 | SYS 1 | SYS 2 |
| 1 | DP > PROGRAMMED FAN CONTROL ON PRESSURE | DP < PROGRAMMED FAN CONTROL ON PRESSURE MINUS PROGRAMMED DIFFERENTIAL PRESSURE | 7B7-8 | TB10-8 | 1-KF1 | 2-KF1 | 1-MF1 | 2-MF2 |
| 2 | DP > PROGRAMMED FAN CONTROL ON PRESSURE AND FAN STAGE 1 IS ENERGIZED | DP < PROGRAMMED FAN CONTROL ON PRESSURE MINUS PROGRAMMED DIFFERENTIAL PRESSURE AND FAN STAGE 1 IS ENERGIZED | TB7-8 and TB7-9 | TB10-8 and TB10-9 | 1-KF1 and 1-KF2 | 2-KF1 and 2-KF2 | 1-MF1 and 1-MF2 | 2-MF1 and 2-MF2 |
| 3 | DP > PROGRAMMED FAN CONTROL ON PRESSURE AND FAN STAGES 1 AND 2 ARE ENERGIZED | DP < PROGRAMMED FAN CONTROL ON PRESSURE MINUS PROGRAMMED DIFFERENTIAL PRESSURE AND FAN STAGES 1 AND 2 ARE ENERGIZED | TB7-8 and TB7-9 and TB7-10 | TB10-8 and TB10-9 and TB10-10 | 1-KF1 and 1-KF2 and 1-KF3 | 2-KF1 and 2-KF2 and 2-KF3 | 3 FAN: 1-MF1 and 1-MF2 and 1-MF3 4 FAN: 1-MF1 and 1-MF2 and 1-MF3 and 1-MF4 | 3 FAN: 2-MF1 and 2-MF2 and 2-MF3 4 FAN: 2-MF1 and 2-MF2 and 2-MF3 and 2-MF4 |

* When a fan stage is turned on, the pressure for the next stage is increased 20 PSIG and ramped back to the programmed on pressure over the next 20 seconds.

** When a fan stage is turned off (Programmed ON pressure minus the differential), the OFF pressure for the next stage is decreased 20 PSIG and ramped back to the programmed OFF pressure minus the differential.

8

NOTE

***The time delay (fan delay timer) between turning fan stages on and off is fixed at 5 seconds.***

**TABLE 23 -** YLAA STANDARD CONDENSER FAN CONTROL USING DISCHARGE PRESSURE ONLY (5 OR 6 FANS PER SYSTEM)

| FAN STAGE | ON* | OFF** | IPUII I/O OUTPUT | | FAN CONTACTOR | | FAN # | |
|---|---|---|---|---|---|---|---|---|
| | | | SYS 1 | SYS 2 | SYS 1 | SYS 2 | SYS 1 | SYS 2 |
| 1 | DP > PROGRAMMED FAN CONTROL ON PRESSURE | DP < PROGRAMMED FAN CONTROL ON PRESSURE MINUS PROGRAMMED DIFFERENTIAL PRESSURE | TB7-8 | TB10-8 | 1-KF1 | 2-KF1 | 1-MF1 | 2-MF1 |
| 2 | DP > PROGRAMMED FAN CONTROL ON PRESSURE AND FAN STAGE 1 IS ENERGIZED | DP < PROGRAMMED FAN CONTROL ON PRESSURE MINUS PROGRAMMED DIFFERENTIAL PRESSURE AND FAN STAGE 1 IS ENERGIZED | TB7-8 and TB7-9 | TB10-8 and TB10-9 | 1-KF1 and 1-KF2 | 2-KF1 and 2-KF2 | 1-MF1 and 1-MF2 and 1-MF3 | 2-MF1 and 2-MF2 and 2-MF3 |
| 3 | DP > PROGRAMMED FAN CONTROL ON PRESSURE AND FAN STAGES 1 AND 2 ARE ENERGIZED | DP < PROGRAMMED FAN CONTROL ON PRESSURE MINUS PROGRAMMED DIFFERENTIAL PRESSURE AND FAN STAGES 1 AND 2 ARE ENERGIZED | TB7-8 and TB7-9 and TB7-10 | TB10-8 and TB10-9 and TB10-10 | 1-KF1 and 1-KF2 and 1-KF3 | 2-KF1 and 2-KF2 and 2-KF3 | 5 FAN: 1-MF1 and 1-MF2 and 1-MF3 and 1-MF4 and 1-MF5 6 FAN: 1-MF1 and 1-MF2 and 1-MF3 and 1-MF4 and 1-MF5 and 1-MF6 | 5 FAN: 1-MF1 and 1-MF2 and 1-MF3 and 1-MF4 and 1-MF5 |

* When a fan stage is turned on, the pressure for the next stage is increased 20 PSIG and ramped back to the programmed on pressure over the next 20 seconds.

** When a fan stage is turned off (Programmed ON pressure minus the differential), the OFF pressure for the next stage is decreased 20 PSIG and ramped back to the programmed OFF pressure minus the differential.

NOTE

***The time delay (fan delay timer) between turning fan stages on and off is fixed at 5 seconds.***

## LOAD LIMITING

Load Limiting is a feature that prevents the unit from loading beyond the desired value. 2 and 4 compressor units can be load limited to 50%. This would allow only 1 compressor per system to run. 3 and 6 compressor units can be load limited to 33% or 66%. The 66% limit would allow up to 2 compressors per system to run, and the 33% limit would allow only 1 compressor per system to run. Five-compressor units may be load limited to 40% (1 compressor per system runs) or 80% (up to 2 compressors per system) are permitted to run. No other values of limiting are available.

There are two ways to load limit the unit. The first is through remote communication via an ISN. Load limit stages are sent through YORK Talk on pages 9 and 10 of feature 54. Page 9 is stage 1 load limit and page 10 is stage 2 load limit.

A second stage of load limiting the unit is accomplished by closing contacts connected to the Load Limit (XTBC1 – terminals 13-21) and PWM inputs (XTBC1 – terminals 13-20). Stage 1 of load limiting involves closing the Load Limit input. Stage 2 of load limiting involves closing both the Load Limit and PWM inputs. The first stage of limiting is either 80%, 66% or 50%, depending on the number of compressors on the unit. The second stage of limiting is either 40% or 33% and is only available on 3, 5 and 6 compressor units. *Table 24 on page 149* shows the load limiting permitted for the various numbers of compressors.

**TABLE 24 -** COMPRESSOR OPERATION LOAD LIMITING

| COMPRESSORS IN UNIT | STAGE 1 | STAGE 2 |
|---|---|---|
| 2 | 50% | - |
| 3 | 66% | 33% |
| 4 | 50% | - |
| 5 | 80% | 40% |
| 6 | 66% | 33% |

NOTE

***Simultaneous operation of Remote Load Limiting and EMS-PWM Temperature Reset (described on following pages) cannot occur.***

## COMPRESSOR RUN STATUS

Compressor run status is indicated by closure of contacts at XTBC2 – Terminals 25 to 26 for system 1 and XTBC2 – Terminals 27 to 28 for system 2.

## ALARM STATUS

System or unit shutdown is indicated by normally-open alarm contacts opening whenever the unit shuts down on a unit fault, locks out on a system fault, or experiences a loss of power to the chiller electronics . System 1 alarm contacts are located at XTBC2 – Terminals 29 to 30. System 2 alarm contacts are located at XTBC2 – Terminals 31 to 32. The alarm contacts will close when conditions allow the unit to operate, or the fault is reset during a loss of power, the contacts will remain open until power is reapplied and no fault conditions exist.

## REMOTE BAS/EMS TEMPERATURE RESET USING A VOLTAGE OR CURRENT SIGNAL

The Remote Reset Option allows the Control Center of the unit to reset the chilled liquid setpoint using a 0 to 10VDC input, or a 4 to 20mA input connected to XTBC1 Terminals A- and A+. Whenever a reset is called for, the change may be noted by pressing the COOLING SETPOINTS key twice. The new value will be displayed as "REM SETP = XXX °F."

If a 0 to 10VDC signal is supplied, it is applied to Terminals A+ and A-, and jumper JP1 on the I/O board must be inserted between pins 2 and 3. To calculate the reset chilled liquid setpoint for values between 0VDC and 10VDC use the following formula:

Setpoint = Local Chilled Liquid Setpoint + °Reset

$$°\text{Reset} = \frac{(\text{DC voltage signal}) \times (*\text{Max Reset Value})}{10}$$

Example:

Local Chilled Liquid Setpoint = 45 °F (7.22 °C)

*Max Reset Value = 20 °F (11.11 °C)

Input Signal = 6VDC

(English)

$$°\text{Reset} = \frac{6\text{VDC} \times 20\ °\text{F}}{10} = 12\ °\text{F Reset}$$

New Setpoint = 45 °F + 12 °F = 57 °F

(Metric)

$$°\text{Reset} = \frac{6\text{VDC} \times 11.\ 11\ °\text{C}}{10} = 6.67\ °\text{C Reset}$$

New Setpoint = 7.22 °C + 6.67 °C = 13.89 °C

* Max Reset Value is the "Max EMS-PWM Remote Temp. Reset" setpoint value described in *Remote Setpoint Control on page 117* under "Cooling Setpoints". Programmable values are from 2 °F to 40 °F (1.11 °C to 11.11 °C).

If a 4 to 20mA signal is supplied, it is applied to Terminals A+ and A- and jumper JP1 on the I/O board must be installed between pin 1 and 2. To calculate the chilled liquid setpoint for values between 4mA and 20 mA use the following formula:

Setpoint = Local Chilled Liquid Setpoint + °Reset

$$°\text{Reset} = \frac{(\text{mA signal} - 4) \times (*\text{Max Reset Value})}{16}$$

Example:

Local Chilled Liquid Setpoint = 45° (7.22 °C)

*Max Reset Value = 10 °F (5.56 °C)

Input Signal = 12 mA

(English)

$$°\text{Reset} = \frac{8\text{mA} \times 10\ °\text{F}}{16} = 5\ °\text{F Reset}$$

Setpoint = 45 °F + 5 °F = 50 °F

(Metric)

$$°\text{Reset} = \frac{8\text{mA} \times 5.56\ °\text{C}}{16} = 2.78\ °\text{C Reset}$$

Setpoint = 7.22 °C + 2.78 °C = 10.0 °C

NOTE

***A 240 to 24 Volt Ratio Transformer (T3) is used to derive nominal 12 volt output from the 120 volt supply.***

# SECTION 9 – SERVICE AND TROUBLESHOOTING

## CLEARING HISTORY BUFFERS

The history buffers may be cleared by pressing the HISTORY key and then repeatedly pressing the UP arrow key until you scroll past the last history buffer choice. The following message will be displayed:

```
INITIALIZE  HISTORY
ENTER = YES
```

Pressing the ENTER/ADV key at this display will cause the history buffers to be cleared. Pressing any other key will cancel the operation.

NOTE

***DO NOT CLEAR BUFFERS. Important information may be lost. Contact factory service.***

## SERVICE MODE

Service Mode is a mode that allows the user to enable or disable all of the outputs (except compressors) on the unit, change chiller configuration setup parameters and view all the inputs to the microboard.

To enter Service Mode, turn the Unit Switch OFF and press the following keys in the sequence shown:

- PROGRAM
- UP ARROW
- UP ARROW
- DOWN ARROW
- DOWN ARROW
- ENTER

Service Mode will time out after 30 minutes and return to normal control mode, if the panel is accidentally left in this mode. Otherwise, turning the unit switch ON will take the panel out of Service Mode.

## SERVICE MODE – OUTPUTS

After pressing the key sequence as described, the control will enter Service Mode permitting the outputs (except compressors), operating hours, refrigerant type, expansion valve type, and start/hour counters to be viewed/modified. The ENTER/ADV key is used to advance through the outputs. Using the ↑ and ↓ (UP/DOWN ) arrow keys will turn the respective digital output ON/OFF or modify the value.

Following is the order of outputs that will appear as the ENTER/ADV key is pressed:

SYS 1 COMP 1 STATUS TB7-2 IS:
SYS 1 LLSV STATUS TB7-3 IS:
SYS 1 COMP 2 STATUS TB7-4 IS:
SYS 1 COMP 3 STATUS TB7-5 IS:
SYS 1 HGBP STATUS TB7-7 IS:
SYS 2 COMP 1 STATUS TB10-2 IS:
SYS 2 LLSV STATUS TB10-3 IS:
SYS 2 COMP 2 STATUS TB10-4 IS:
SYS 2 COMP 3 STATUS TB10-5 IS:
SYS 1 FAN OUTPUT 1 TB7-8 IS:
SYS 1 FAN OUTPUT 2 TB7-9 IS:
SYS 1 FAN OUTPUT 3 TB7-10 IS:
SYS 2 FAN OUTPUT 1 TB10-8 IS:
SYS 2 FAN OUTPUT 2 TB10-9 IS:
SYS 2 FAN OUTPUT 3 TB10-10 IS:
EVAP HEATER STATUS TB8-2 IS:
SYS 1 ALARM STATUS TB8-3 IS:
SYS 2 ALARM STATUS TB9-2 IS:
EVAP PUMP STATUS TB8-6,7 IS:
SYS 2 HGBV STATUS TB10-7 IS:
SPARE DO TB8-4 IS:
SPARE DO TB8-5 IS:
SPARE DO TB8-8, 9 IS:
SPARE DO TB9-4 IS:
SYS 1 EEV OUTPUT TB5-1, 2 = XXX%
SYS 2 EEV OUTPUT TB6-1, 2 = XXX%
SYS 1 COND FAN SPEED J15-1,5 = XXX%
SYS 2 COND FAN SPEED J15-2,6 = XXX%
SPARE AO J15-3,7 = XXX%
SPARE AO J15-4,8 = XXX%
DATA LOGGING MODE 1 = ON, 0 = OFF
DATA LOGGING TIMER X SECS
SOFT START (disabled)
REFRIGERANT TYPE (R-410A only)
EXPANSION VALVE TYPE (Thermostatic Only)
REMOTE TEMP RESET OPTION =
REMOTE INPUT SERVICE TIME =
"NORTH AMERICAN FEATURE SET ENABLED"
HYDRO PUMP SELECTION
EVAP PUMP TOTAL RUN HOURS
SYS 1 HOURS
SYS 2 HOURS
SYS 1 STARTS
SYS 2 STARTS

Each display will also show the output connection on the microboard for the respective output status shown. For example:

```
SYS 1 LLSV STATUS
TB10-3 IS OFF
```

This display indicates that the system 1 liquid line solenoid valve is OFF, and the output connection from the microboard is coming from terminal block 10 – pin 3.

Pressing the ↑ (UP) arrow key will energize the liquid line solenoid valve and OFF will change to ON in the display as the LLSV is energized. Energizing and de-energizing outputs may be useful during troubleshooting.

## SERVICE MODE – CHILLER CONFIGURATION

After the Outputs are displayed, the next group of displays relate to chiller configuration and start/hour counters. Data logging, soft start, refrigerant type, pump control selection and expansion valve type all must be programmed to match actual chiller configuration.

CAUTION

***Soft start (disabled), Refrigerant Type (R-410A), and Expansion Valve Type (Thermostatic), and North American Feature (Enabled) MUST be properly programmed or damage to compressors and other system components may result***

Following is a list of chiller configuration selections, in order of appearance:

DATA LOGGING MODE = : DO NOT MODIFY
DATA LOGGING TIMER = : DO NOT MODIFY
SOFT START
REFRIGERANT TYPE
EXPANSION VALVE TYPE
REMOTE TEMP RESET OPTION
REMOTE INPUT SERVICE TIME
FEATURE SET
PUMP CONTROL SELECTION
SYS 1 HOURS
SYS 2 HOURS
SYS 1 STARTS
SYS 2 STARTS

The last displays shown on the above list are for the accumulated run and start timers for each system. All values can also be changed using the ↑ (UP) and ↓ (Down) arrow keys, but under normal circumstances would not be required or advised. After the last start display, the microprocessor will display the first programmable value under the PROGRAM key.

## SERVICE MODE – ANALOG AND DIGITAL INPUTS

After entering Service Mode (PROGRAM ↑↑ ↓↓), all digital and analog inputs to the microboard can be viewed by pressing the OPER DATA key. After pressing the OPER DATA key, the ↑ (UP) arrow and ↓ (DOWN) arrow keys are used to scroll through the analog and digital inputs.

Following is the order of analog and digital inputs that will appear when sequenced with the ↓ (Down) arrow key:

(analog inputs)
SYS 1 SUCT PRESSURE
UNIT TYPE
SYS 1 *DISCH PRESSURE
SYS 1** SUCTION TEMP.
SYS 2** SUCTION TEMP.
AMBIENT AIR TEMP.
LEAVING LIQUID TEMP.
RETURN LIQUID TEMP.
SYS 2 SUCTION PRESSURE
SYS 2 SPARE
SYS 2 *DISCH PRESSURE
SYS 1 MTR VOLTS
SYS 2 MTR VOLTS
(digital inputs)
PWM TEMP RESET INPUT
LOAD LIMIT INPUT
FLOW SW / REM START
SPARE
SINGLE SYSTEM SELECT
SYS 1 MP / HPCO INPUT
SYS 2 MP / HPCO INPUT

* The discharge pressure transducer is optional on some models.

** The suction temp. sensor is on EEV units only.

The analog inputs will display the input connection, the temperature or pressure, and corresponding input voltage such as:

```
SYS 1 SUCT PR J7-10
2.1 VDC = 81 PSIG
```

This example indicates that the system 1 suction pressure input is connected to plug 7 – pin 10 (J7-10) on the I/O board. It indicates that the voltage is 2.1VDC which corresponds to 81 PSIG (5.6 bars) suction pressure.

The digital inputs will display the input connection and ON/OFF status such as:

**FLOW SW/REM START**
**J13-5 IS ON**

This indicates that the flow switch/remote start input is connected to plug 13- pin 5 (J13-5) on the microboard, and is ON (ON = +30VDC unregulated input, OFF = 0VDC input on digital inputs).

## CONTROL INPUTS/OUTPUTS

*Table 25* through *Table 28 on page 153* are a quick reference list providing the connection points and a description of the inputs and outputs respectively. All input and output connections pertain to the connections at the microboard.

**TABLE 25 -** I/O DIGITAL INPUTS

| | |
|---|---|
| **J13-2** | Unit ON/OFF Switch |
| **J13-3** | Load Limit Stage 2 on 3, 5 & 6 Comp. Units |
| **J13-4** | Load Limit Stage 1 |
| **J13-5** | Flow Switch and Remote Start/Stop |
| **J13-6** | Spare |
| **J13-7** | Single System Select<br>(Jumper = Single Sys, No Jumper = Two Sys) |
| **J13-8** | CR1<br>(Sys 1 Motor Protector/High Pressure Cutout) |
| **J13-10** | CR2<br>(Sys 2 Motor Protector/High Pressure Cutout) |

**TABLE 26 -** I/O DIGITAL OUTPUTS

| | |
|---|---|
| **TB7-2** | SYS 1 Compressor 1 |
| **TB7-3** | SYS 1 Liquid Line Solenoid Valve |
| **TB7-4** | SYS 1 Compressor 2 |
| **TB7-5** | SYS 1 Compressor 3 |
| **TB7-7** | SYS 1 Hot Gas Bypass Valve |
| **TB10-2** | SYS 2 Compressor 1 |
| **TB10-3** | SYS 2 Liquid Line Solenoid Valve |
| **TB10-4** | SYS 2 Compressor 2 |
| **TB10-5** | SYS 2 Compressor 3 |
| **TB7-8** | SYS 1 Condenser Fan Output 1 |
| **TB7-9** | SYS 1 Condenser Fan Output 2 |
| **TB7-10** | SYS 1 Condenser Fan Output 3 |
| **TB10-8** | SYS 2 Condenser Fan Output 1 |
| **TB10-9** | SYS 2 Condenser Fan Output 2 |
| **TB10-10** | SYS 2 Condenser Fan Output 3 |
| **TB8-2** | Evaporator Heater |
| **TB8-3** | SYS 1 Alarm |
| **TB9-2** | SYS 2 Alarm |
| **TB8-6 & 7** | Evaporator Pump Starter |
| **TB10-7** | SYS 2 Hot Gas Bypass Valve |

**TABLE 27 -** I/O ANALOG INPUTS

| | |
|---|---|
| **J7-10** | SYS 1 Suction Transducer<br>-or-<br>SYS 1 Low Pressure Switch |
| **J11-12** | Unit Type: Chiller = NO Jumper J11-12 to +24 VDC<br>YCUL Condensing Unit = Jumper J11-12 to +24 VDC (Do NOT Use) |
| **J7-11** | SYS 1 Discharge Pressure Transducer (Optional) |
| **J6-9** | Ambient Air Temp. Sensor |
| **J6-7** | Leaving Chilled Liquid Temp. Sensor |
| **J6-8** | Return Chilled Liquid Temp. Sensor |
| **J9-10** | SYS 2 Suction Pressure Transducer<br>-or-<br>SYS 2 Low Pressure Switch |
| **J9-11** | SYS 2 Discharge Pressure Transducer (Optional) |
| **J7-12** | Unit/SYS 1 Voltage |
| **J9-12** | SYS 2 Voltage |
| **J11-11** | Remote Temperature Reset |

**TABLE 28 -** I/O ANALOG OUTPUTS

| | |
|---|---|
| **N/A** | Not Applicable |

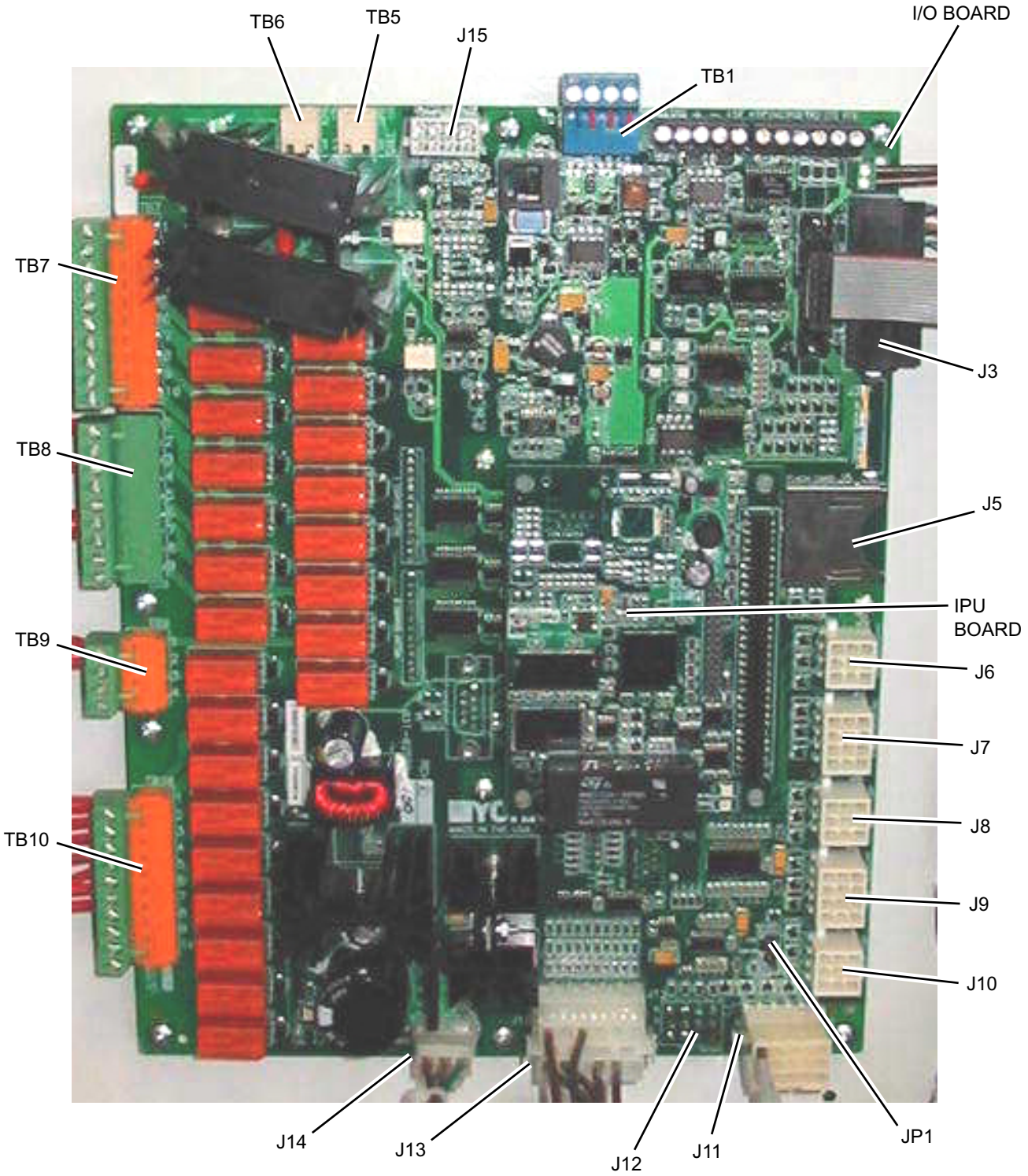


**FIGURE 31 -** MICROBOARD LAYOUT

## CHECKING INPUTS AND OUTPUTS

### Digital Inputs

Refer to the unit wiring diagram. All digital inputs are connected to J13-1 of the I/O board. The term "digital" refers to two states – either ON or OFF. As an example, when the flow switch is closed, 30VDC will be applied to J13, pin 5 (J13-5) of the I/O board. If the flow switch is open, 0VDC will then be present at J13-5.

Pin 1 of J13 is an unregulated 30VDC source used to supply the DC voltage to the various user contacts, unit switch, flow switch, etc. This DC source is factory wired to XTBC1, Terminal 13. Any switch or contact used as a digital input would be connected to this terminal, with the other end connecting to its respective digital input on the microboard. Any time a switch or contact is closed, 30VDC would be applied to that particular digital input. Any time a switch or contact is open, 0VDC would be applied to that particular digital input.

Typically, voltages of 24 to 36VDC could be measured for the DC voltage on the digital inputs. This voltage is in reference to ground. The unit case should be sufficient as a reference point when measuring digital input voltages.

### Analog Inputs – Temperature

Refer to the unit wiring diagram. Temperature inputs are connected to the microboard on plug J6. These analog inputs represent varying DC signals corresponding to varying temperatures. All voltages are in reference to the unit case (ground). Following are the connections for the temperature sensing inputs.

### Outside Air Sensor

J6-6 = +5VDC regulated supply to sensor.

J6-9 = VDC input signal to the microboard. See *Table 29 on page 155* for voltage readings that correspond to specific outdoor temperatures.

J6-3 = drain (shield connection = 0VDC) return

**TABLE 29 -** OUTDOOR AIR SENSOR TEMPERATURE/VOLTAGE/CORRELATION

| TEMP °F | VOLTAGE (SIGNAL INPUT TO RETURN) | TEMP °C |
|---|---|---|
| 0 | 0.7 | -18 |
| 5 | 0.8 | -15 |
| 10 | 0.9 | -12 |
| 15 | 1.0 | -9 |
| 20 | 1.1 | -7 |
| 25 | 1.2 | -4 |
| 30 | 1.4 | -1 |
| 35 | 1.5 | 2 |
| 40 | 1.7 | 4 |
| 45 | 1.8 | 7 |
| 50 | 2.0 | 10 |
| 55 | 2.2 | 13 |
| 60 | 2.3 | 16 |
| 65 | 2.5 | 18 |
| 70 | 2.6 | 21 |
| 75 | 2.8 | 24 |
| 80 | 2.9 | 27 |
| 85 | 3.1 | 29 |
| 90 | 3.2 | 32 |
| 95 | 3.4 | 35 |
| 100 | 3.5 | 38 |
| 105 | 3.6 | 41 |
| 110 | 3.7 | 43 |
| 115 | 3.8 | 46 |
| 120 | 3.9 | 49 |
| 125 | 4.0 | 52 |
| 130 | 4.1 | 54 |

**TABLE 30 -** ENTERING/LEAVING CHILLED LIQUID TEMP. SENSOR, TEMPERATURE/VOLTAGE CORRELATION

| TEMP °F | VOLTAGE (SIGNAL INPUT TO RETURN) | TEMP °C |
|---|---|---|
| 10 | 1.33 | -12 |
| 12 | 1.39 | -11 |
| 14 | 1.46 | -10 |
| 16 | 1.51 | -9 |
| 18 | 1.58 | -8 |
| 20 | 1.65 | -7 |
| 22 | 1.71 | -6 |
| 24 | 1.78 | -4 |
| 26 | 1.85 | -3 |
| 28 | 1.91 | -2 |
| 30 | 1.98 | -1 |
| 32 | 2.05 | 0 |
| 34 | 2.12 | 1 |
| 36 | 2.19 | 2 |
| 38 | 2.26 | 3 |
| 40 | 2.33 | 4 |
| 42 | 2.40 | 6 |
| 44 | 2.47 | 7 |
| 46 | 2.53 | 8 |
| 48 | 2.60 | 9 |
| 50 | 2.65 | 10 |
| 52 | 2.73 | 11 |
| 54 | 2.80 | 12 |
| 56 | 2.86 | 13 |
| 58 | 2.92 | 14 |
| 60 | 2.98 | 16 |
| 62 | 3.05 | 17 |
| 64 | 3.11 | 18 |
| 66 | 3.17 | 19 |
| 68 | 3.23 | 20 |
| 70 | 3.29 | 21 |
| 72 | 3.34 | 22 |
| 74 | 3.39 | 23 |
| 76 | 3.45 | 24 |
| 78 | 3.5 | 26 |
| 80 | 3.54 | 27 |

## Liquid and Refrigerant Sensor Test Points

(See *Table 30 on page 156*)

### Entering Chilled Liquid Sensor

J6-5 = +5VDC regulated supply to sensor.

J6-8 = VDC input signal to the I/O board. See *Table 30 on page 156* for voltage readings that correspond to specific liquid temperatures.

J6-2 = drain (shield connection = 0VDC) Return

### Leaving Chilled Liquid Temperature Sensor

J6-4 = +5VDC regulated supply to sensor.

J6-7 = VDC input signal to the microboard. See *Table 30 on page 156* for voltage readings that correspond to specific liquid temperatures.

J6-1 = drain (shield connection = 0VDC) return

### Analog Inputs – Pressure

Refer to the unit wiring diagram. Pressure inputs are connected to the microboard on plugs J7 and J9. These analog inputs represent varying DC signals corresponding to varying pressures. All voltages are in reference to the unit case (ground).

System 1 discharge and suction pressures will be connected to J7 of the microboard. System 2 discharge and suction pressure transducers will be connected to J9 of the microboard.

The discharge transducers are optional on all units. If the discharge transducers are not installed, no connections are made to the microboard and the discharge pressure readout on the display would be zero.

The suction pressure transducers are standard on all YLAA's. The suction pressure transducers have a range of 0 to 400 PSIG. The output will be linear from 0.5VDC to 4.5VDC over the 400 PSIG (27.5 barg) range.

The discharge transducers have a range from 0 to 650 PSIG. The output will be linear from 0.5VDC to 4.5VDC over the 600 PSIG (41.25 barg) range. Following is the formula that can be used to verify the voltage output of the transducer. All voltage reading are in reference to ground (unit case).

**TABLE 31 -** PRESSURE TRANSDUCERS

| 0-400 PSIG SUCTION PRESSURE TRANSDUCER | | 0-600 PSIG DISCHARGE PRESSURE TRANSDUCER | |
|---|---|---|---|
| PRESSURE PSIG | VOLTAGE VDC | PRESSURE PSIG | VOLTAGE VDC |
| 0 | 0.5 | 0 | 0.5 |
| 50 | 1.0 | 75 | 1.0 |
| 100 | 1.5 | 150 | 1.5 |
| 150 | 2.0 | 225 | 2.0 |
| 200 | 2.5 | 300 | 2.5 |
| 250 | 3.0 | 375 | 3.0 |
| 300 | 3.5 | 450 | 3.5 |
| 350 | 4.0 | 525 | 4.0 |
| 400 | 4.5 | 600 | 4.5 |

RED WIRE = 5V, BLACK WIRE = 0V, WHITE/GREEN WIRE = SIGNAL

TEST POINTS:

Suction Pressure:

System 1: ·····Microboard J7-10 to J7-9

System 2: ·····Microboard J9-10 to J9-9

Discharge Pressure:

System 1: ·····Microboard J7-11 to J7-7

System 2: ·····Microboard J9-11 to J9-7

V = (Pressure in PSIG x .01) + .5

or

V = (Pressure in BARG x .145) + .5

where V = DC voltage output

Pressure = pressure sensed by transducer

The I/O board connections for the Discharge Transducers are as follows.

### System 1 Discharge Transducer

J7-6 = +5VDC regulated supply to transducer.

J7-11 = VDC input signal to the microboard. See the formula above for voltage readings that correspond to specific discharge pressures.

J7-7 = +5VDC return

J7-2 = drain (shield connection = 0VDC)

### System 2 Discharge Transducer

J9-6 = +5VDC regulated supply to transducer.

J9-11 = VDC input signal to the microboard. *S*ee the formula above for voltage readings that correspond to specific discharge pressures.

J9-7 = +5VDC return

J9-2 = drain (shield connection = 0VDC)

The suction transducers have a range from 0 to 400 PSIG (27.5 barg). The output will be linear from 0.5VDC to 4.5VDC over the 400 PSIG (27.5 barg) range. Following is a formula that can be used to verify the voltage output of the transducer. All voltage reading are in reference to ground (unit case).

V = (Pressure in PSIG x .02) + .5

or

V = (Pressure in barg x .29) + .5

where V = DC voltage input to microprocessor

Pressure = pressure sensed by transducer

Following are the I/O board connections for the Suction Transducer.

### System 1 Suction Transducer

J7-5 = +5VDC regulated supply to transducer.

J7-10 = VDC input signal to the microboard. See the formula above for voltage readings that correspond to specific suction pressures.

J7-9 = +5VDC return.

J7-1 = drain (shield connection = 0VDC).

### System 2 Suction Transducer

J9-5 = +5VDC regulated supply to transducer.

J9-10 = VDC input signal to the microboard. See the formula above for voltage readings that correspond to specific suction pressures.

J7-9 = +5VDC return.

J7-11 = drain (shield connection = 0VDC).

### Digital Outputs

Refer to the unit wiring diagram and *Figure 32 on page 158*. The digital outputs are located on TB7, TB8, and TB9 and TB-10 of the microboard. All outputs are 120VAC with the exception of TB8-6 to TB8-7 which are the contacts that can be used for a remote evaporator pump start signal. The voltage applied to either of these terminals would be determined by field wiring.

Each output is controlled by the microprocessor by switching 120VAC to the respective output connection energizing contactors, evaporator heater, and solenoids according to the operating sequence.

120VAC is supplied to the I/O board via connections at TB7-1, TB7-6, TB10-1, TB10-6, TB8-1 and TB9-1. Figure 34 illustrates the relay contact architecture on the microboard.

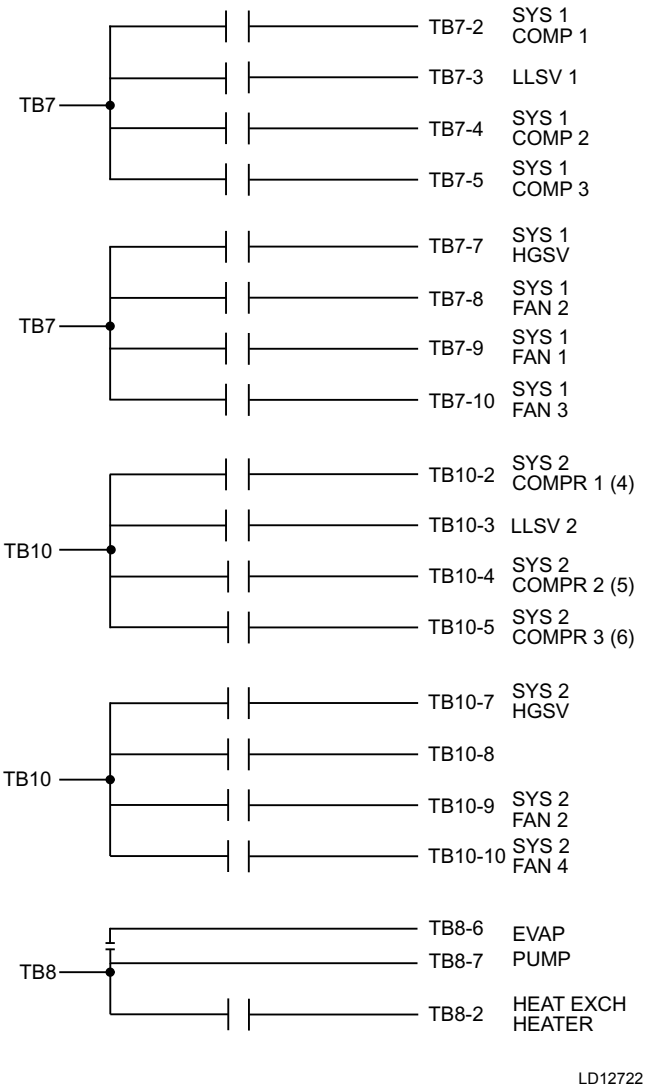


**FIGURE 32 -** I/O BOARD RELAY CONTACT ARCHITECTURE

## OPTIONAL PRINTER INSTALLATION

The micro panel is capable of supplying a printout of chiller conditions or fault shutdown information at any given time. This allows operator and service personnel to obtain data and system status with the touch of the keypad. In addition to manual print selection, the micro panel will provide an automatic printout whenever a fault occurs. Detailed explanation of the print function is given under *Print Key on page 110*.

Johnson Controls recommends the field tested WEIGH-TRONIX model 1220 printer (or former IMP 24). This is a compact low cost printer that is ideal for service work and data logging.

The WEIGH-TRONIX printer can be obtained by contacting WEIGH-TRONIX for purchase information at:

WEIGH-TRONIX

2320 Airport Blvd.

Santa Rosa, CA 95402

Phone: 1-800-982-6622 or 1-707-527-5555

(International Orders Only)

The part number for the printer that is packaged specifically for YORK is P/N 950915576. The cable to connect the printer can either be locally assembled from the parts listed, or ordered directly from WEIGH-TRONIX under part number 287-040018.

### Parts

The following parts are required:

1. WEIGH-TRONIX model 1220 printer.
2. Desk top calculator paper, 2.25” (5.7cm) wide.
3. Twisted Pair Shielded Cable (minimum 3 conductor), #18 AWG stranded, 300V minimum insulation, 25 ft. (7.62m) maximum length.
4. One 25 pin Cannon connector and shell.
5. Cannon P/N DB-25P connector, or equivalent.
6. Cannon P/N DB-C2-J9 shell.

### Assembly and Wiring

All components should be assembled and wired as shown in Figure 33. Strip the outside insulation back several inches and individual wires about 3/8” (9.5 mm) to connect the cable at the Microboard. Do not connect the shield at the printer-end of the cable.

### Obtaining a Printout

A printout is obtained by pressing the PRINT key on the keypad and then pressing either the OPER DATA key or HISTORY key.

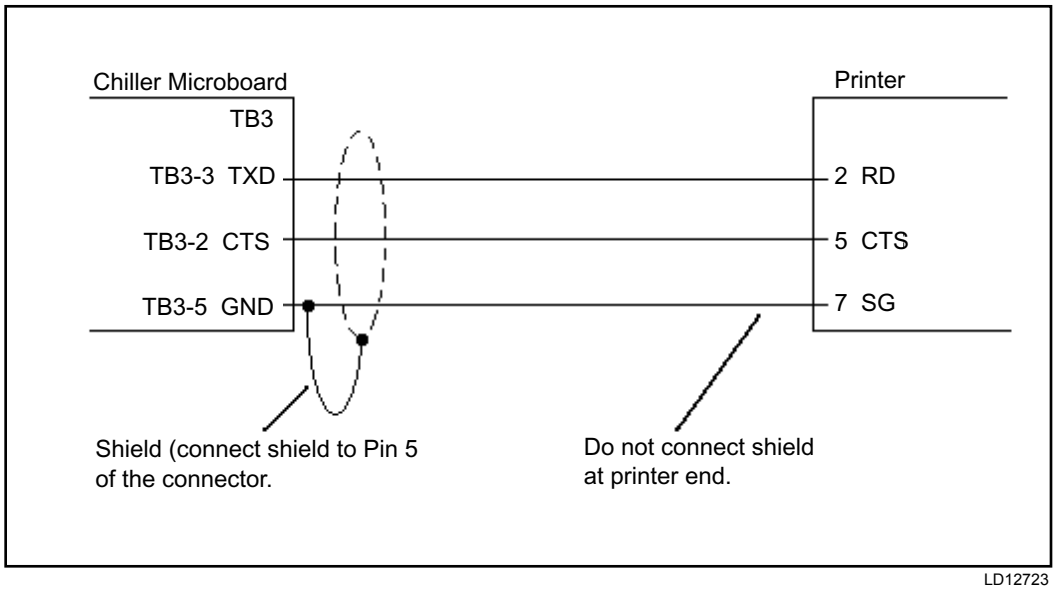


**FIGURE 33 -** PRINTER TO MICROBOARD ELECTRICAL CONNECTIONS

# TROUBLESHOOTING

**TABLE 32 -** TROUBLESHOOTING

| PROBLEM | CAUSE | SOLUTION |
|---|---|---|
| **NO DISPLAY ON PANEL. UNIT WILL NOT OPERATE** | 1. No 115VAC to 24VAC Transformer. | 1a. Check wiring and fuse 1FU.<br>1b. Check wiring emergency stop contacts 5 to L of XTBC2 Terminal Block.<br>1c. Replace Control Transformer. |
| | 2. No 24VAC to Microboard. | 2. Check wiring Control Transformer to Microboard. |
| | 3. Control Transformer defective, no 24VAC output. | 3. Replace Control Transformer. |
| | 4. Short in wire to temp. sensors or pressure transducers. | 4. Unplug connections at IPU II & I/O Board to isolate. |
| | 5. Defective IPU II & I/O Board or the Display Board. | 5. Replace IPU II & I/O Board or the Display Board.<br>NOTE: ***Contact Johnson Controls Service before replacing circuit Boards!*** |
| **FLOW SWITCH/REM STOP NO RUN PERMISSIVE** | 1. No chilled liquid flow. | 1. Check chilled liquid flow. |
| | 2. Flow switch improperly installed. | 2. Check that the flow switch is installed according to manufacturer's instructions. |
| | 3. Defective flow switch. | 3. Replace flow switch. |
| | 4. Remote cycling device open. | 4. Check cycling devices connected to terminals 13 and 14 of the XTBC1 Terminal Block. |
| **LOW SUCTION PRESSURE FAULT** | 1. Improper suction pressure cutouts adjustments. | 1. Adjust per recommended settings. |
| | 2. Low refrigerant charge. | 2. Repair leak if necessary and add refrigerant. |
| | 3. Fouled filter dryer. | 3. Change dryer/core. |
| | 4. TXV defective. | 4. Replace TXV. |
| | 5. Reduced flow of chilled liquid through the cooler. | 5. Check GPM (See *Operational Limitations (English) on page 43*). Check operation of pump, clean pump strainer, purge chilled liquid system of air. |
| | 6. Defective suction pressure transducer/low pressure switch or wiring. | 6. Replace transducer/low pressure switch or faulty switch or wiring. Refer to *SECTION 9 – SERVICE AND TROUBLESHOOTING* for pressure/voltage formula. |
| | 7. LLSV defective | 7. Replace LLSV |
| **HIGH DISCHARGE PRESSURE FAULT** | 1. Condenser fans not operating or operating backwards. | 1. Check fan motor, and contactors. Assure fan blows air upward. |
| | 2. Too much refrigerant. | 2. Remove refrigerant. |
| | 3. Air in refrigerant system. | 3. Evacuate and recharge system. |
| | 4. Defective discharge pressure transducer. | 4. Replace discharge pressure transducer. Refer to *SECTION 9 – SERVICE AND TROUBLESHOOTING* for pressure/voltage formula on *page 157*. |

**TABLE 32** - TROUBLESHOOTING (CONT'D)

| PROBLEM | CAUSE | SOLUTION |
|---|---|---|
| **LOW LIQUID TEMP FAULT** | 1. Improperly adjusted leaving chilled liquid temp. cutout (glycol only). | 1. Re-program the leaving chilled liquid temp. cutout. |
| | 2. Micro panel setpoint/range values improperly programmed. | 2. Re-adjust setpoint/range. |
| | 3. Chilled liquid flow too low. | 3. Increase chilled liquid flow. Refer to *Operational Limitations (English) on page 43*). |
| | 4. Defective LWT or RWT sensor (assure the sensor is properly installed in the bottom of the well with a generous amount of heat) conductive compound). | 4. Compare sensor against a known good Temperature sensing device. Refer to *Table 30 on page 156* |
| **MP / HPCO FAULT** | 1. Compressor internal motor protector (MP) open. | 1. Verify refrigerant charge is not low. Verify superheat setting of 10 °F to 15 °F (5.6 °C to 8.3 °C). Verify correct compressor rotation. Verify compressor is not overloaded. |
| | 2. External overload tripped. | 2. Determine cause and reset. |
| | 3. HPCO switch open. | 3. See High Press. Disch. Fault. |
| | 4. Defective HPCO switch. | 4. Replace HPCO switch. |
| | 5. Defective CR relay. | 5. Replace relay. |
| **COMPRESSOR(S) WON'T START** | 1. Demand not great enough. | 1. No problem. *Consult Installation Manual to aid in understanding compressor operation and capacity control.* |
| | 2. Defective water temperature sensor. | 2. Compare the display with a thermometer. Should be within plus or minus 2 degrees. Refer to *Table 30 on page 156 for RWT/ LWT temp./voltage table.* |
| | 3. Contactor/Overload failure. | 3. Replace defective part. |
| | 4. Compressor failure. | 4. Diagnose cause of failure and replace. |
| **LACK OF COOLING EFFECT** | 1. Fouled evaporator surface. Low suction pressure will be observed. | 1. Contact the local Johnson Controls service representative. |
| | 2. Improper flow through the evaporator. | 2. Reduce flow to within chiller design specs. See *Operational Limitations (English) on page 43*). |
| | 3. Low refrigerant charge. Low suction pressure will be observed. | 3. Check subcooling and add charge as needed. |

THIS PAGE INTENTIONALLY LEFT BLANK

# SECTION 10 – MAINTENANCE

It is the responsibility of the equipment owner to perform maintenance on the system.

### Important

If system failure occurs due to improper maintenance during the warranty period, Johnson Controls will not be liable for costs incurred to return the system to satisfactory operation. The following is intended only as a guide and covers only the chiller unit components. It does not cover other related system components which may or may not be furnished by Johnson Controls. System components should be maintained according to the individual manufacture's recommendations as their operation will affect the operation of the chiller.

## COMPRESSORS

### Oil Level check

The oil level can only be tested when the compressor is running in stabilized conditions, to ensure that there is no liquid refrigerant in the lower shell of the compressor. When the compressor is running at stabilized conditions, the oil level must be between 1/4 and 3/4 in the oil sight glass. **At shutdown, it is acceptable if the oil level falls to the bottom limit of the oil sight glass.**

NOTE

***Use YORK "V" oil when adding oil.***

### Oil Analysis

The oil used in these compressors is pale yellow in color (POE oil). If the oil color darkens or exhibits a change in color, this may be an indication of contaminants in the refrigerant system. If this occurs, an oil sample should be taken and analyzed. If contaminants are present, the system must be cleaned to prevent compressor failure.

CAUTION

***Never use the scroll compressor to pump the refrigerant system down into a vacuum. Doing so will cause internal arcing of the compressor motor which will result in failure of compressor.***

## CONDENSER FAN MOTORS

Condenser fan motors are permanently lubricated and require no maintenance.

### Condenser MCHX

Dirt should not be allowed to accumulate on the MCHX condenser surfaces. Cleaning should be as often as necessary to keep coils clean.

NOTE

***Exercise care when cleaning the MCHX so that the fins are not damaged.***

## CONDENSER MCHX CLEANING

The cleaning procedure for the condenser MCHX is significantly different than tube and fin type MCHX. Care must be taken to understand the differences to avoid damage to the MCHX. These differences require a number of DO NOT's that must be observed:

- DO NOT use coil cleaners or any chemical on a MCHX. This can cause severe damage to the coils.
- DO NOT use a pressure washer to clean the MCHX. While it is possible to clean a the MCHX with a pressure washer, it's also possible to destroy it.
- DO NOT contact the MCHX with a hard surface such as a hose nozzle or metal vacuum nozzle or any other tool.

Follow the three steps below for cleaning the MCHX:

1. Remove surface debris such as dirt, leaves, insects, fibers, etc. with a vacuum cleaner having a soft attachment rather than a metal tube. Compressed air blown from the inside out can also be used. When brushing debris off the face of the MCHX a soft bristle (not wire) brush can be used. Do not scrape the MCHX with the vacuum nozzle, air nozzle, or any other tool.

2. Rinse the MCHX with tap water. Do not use MCHX cleaners. Rinse the coil from the inside out, running water through every passage in the heat exchanger surface until it is clean. Use a gentle spray from a spray nozzle with a plastic end or put your finger on the end of the spray nozzle to reduce impact and provide a gentle spray.
3. Because of the fin geometry, the condenser MCHX retain water more than tube and fin style. It is generally recommended to blow or vacuum out the rinse water from the MCHX to speed drying and prevent water pooling.

## OPERATING PARAMETERS

Regular checks of the system should be preformed to ensure that operating temperatures and pressures are within limitations, and that the operating controls are set within proper limits. Refer to *SECTION 8 – UNIT OPERATION*, *SECTION 6 – COMMISSIONING*, and *SECTION 4 – INSTALLATION* of this manual.

## ON-BOARD BATTERY BACK-UP

The Real Time Clock chip (U5) located on the 031-02630 IPU II board that maintains the date/time and stores customer programmed setpoints. The Real Time Clock is a 128K bram, P/N 031-02565-000. The IPU II board must have JP1 installed when the 128K bram is installed.

NOTE

***Do not confuse JP1 on the IPU II (031-02630) board with JP1 on the I/O (031-02550) board.***

## BRAZED PLATE HEAT EXCHANGER (EVAPORATOR) HEATER

CAUTION

***The internal power supply to the Evaporator Heater is 120VAC. Disconnecting 120VAC power from the unit, at or below freezing temperatures, can result in damage to the evaporator and unit as a result of the chilled liquid freezing.***

## OVERALL UNIT INSPECTION

In addition to the checks listed on this page, periodic overall inspections of the unit should be accomplished to ensure proper equipment operation. Items such as loose hardware, component operation, refrigerant leaks, unusual noises, etc. should be investigated and corrected immediately.

# TEMPERATURE CONVERSION CHART

## Temperature Conversion Chart - Actual Temperatures

| ° F | = | ° C | °C | = | °F |
|---|---|---|---|---|---|
| 0 | | -17.8 | -18 | | -0.4 |
| 4 | | -15.6 | -16 | | 3.2 |
| 8 | | -13.3 | -14 | | 6.8 |
| 12 | | -11.1 | -12 | | 10.4 |
| 16 | | -8.9 | -10 | | 14 |
| 20 | | -6.7 | -8 | | 17.6 |
| 24 | | -4.4 | -6 | | 21.2 |
| 28 | | -2.2 | -4 | | 24.8 |
| 32 | | 0.0 | -2 | | 28.4 |
| 36 | | 2.2 | 0 | | 32 |
| 40 | | 4.4 | 2 | | 35.6 |
| 44 | | 6.7 | 4 | | 39.2 |
| 48 | | 8.9 | 6 | | 42.8 |
| 52 | | 11.1 | 8 | | 46.4 |
| 56 | | 13.3 | 10 | | 50 |
| 60 | | 15.6 | 12 | | 53.6 |
| 64 | | 17.8 | 14 | | 57.2 |
| 68 | | 20.0 | 16 | | 60.8 |
| 72 | | 22.2 | 18 | | 64.4 |
| 76 | | 24.4 | 20 | | 68 |
| 80 | | 26.7 | 22 | | 71.6 |
| 84 | | 28.9 | 24 | | 75.2 |
| 88 | | 31.1 | 26 | | 78.8 |
| 92 | | 33.3 | 28 | | 82.4 |
| 96 | | 35.6 | 30 | | 86 |
| 100 | | 37.8 | 32 | | 89.6 |
| 104 | | 40.0 | 34 | | 93.2 |
| 108 | | 42.2 | 36 | | 96.8 |
| 112 | | 44.4 | 38 | | 100.4 |
| 116 | | 46.7 | 40 | | 104 |
| 120 | | 48.9 | 42 | | 107.6 |
| 124 | | 51.1 | 44 | | 111.2 |
| 128 | | 53.3 | 46 | | 114.8 |
| 132 | | 55.6 | 48 | | 118.4 |
| 136 | | 57.8 | 50 | | 122 |
| 140 | | 60.0 | 52 | | 125.6 |
| 144 | | 62.2 | 54 | | 129.2 |
| 148 | | 64.4 | 56 | | 132.8 |
| 152 | | 66.7 | 58 | | 136.4 |
| 156 | | 68.9 | 60 | | 140 |
| 160 | | 71.1 | 62 | | 143.6 |
| 164 | | 73.3 | 64 | | 147.2 |
| 168 | | 75.6 | 66 | | 150.8 |
| 172 | | 77.8 | 68 | | 154.4 |
| 176 | | 80.0 | 70 | | 158 |
| 180 | | 82.2 | 72 | | 161.6 |
| 184 | | 84.4 | 74 | | 165.2 |
| 188 | | 86.7 | 76 | | 168.8 |
| 192 | | 88.9 | 78 | | 172.4 |
| 196 | | 91.1 | 80 | | 176 |
| 200 | | 93.3 | 82 | | 179.6 |
| 204 | | 95.6 | 84 | | 183.2 |
| 208 | | 97.8 | 86 | | 186.8 |
| 212 | | 100.0 | 88 | | 190.4 |
| 216 | | 102.2 | 90 | | 194 |
| 220 | | 104.4 | 92 | | 197.6 |
| 224 | | 106.7 | 94 | | 201.2 |
| 228 | | 108.9 | 96 | | 204.8 |
| 232 | | 111.1 | 98 | | 208.4 |
| 236 | | 113.3 | 100 | | 212 |
| 240 | | 115.6 | 102 | | 215.6 |
| 244 | | 117.8 | 104 | | 219.2 |

## Temperature Conversion Chart - Differential Temperatures

| ° F | = | ° C | °C | = | °F |
|---|---|---|---|---|---|
| 0 | | 0 | 0 | | 0 |
| 4 | | 2.2 | 2 | | 3.6 |
| 8 | | 4.4 | 4 | | 7.2 |
| 12 | | 6.7 | 6 | | 10.8 |
| 16 | | 8.9 | 8 | | 14.4 |
| 20 | | 11.1 | 10 | | 18 |
| 24 | | 13.3 | 12 | | 21.6 |
| 28 | | 15.6 | 14 | | 25.2 |
| 32 | | 17.8 | 16 | | 28.8 |
| 36 | | 20 | 18 | | 32.4 |
| 40 | | 22.2 | 20 | | 36 |
| 44 | | 24.4 | 22 | | 39.6 |
| 48 | | 26.7 | 24 | | 43.2 |
| 52 | | 28.9 | 26 | | 46.8 |
| 56 | | 31.1 | 28 | | 50.4 |
| 60 | | 33.3 | 30 | | 54 |

## Pressure Conversion Chart - Gauge or Differential

| PSI | = | BAR | BAR | = | PSI |
|---|---|---|---|---|---|
| 20 | | 1.38 | 1.5 | | 21.8 |
| 30 | | 2.07 | 2 | | 29 |
| 40 | | 2.76 | 2.5 | | 36.3 |
| 50 | | 3.45 | 3 | | 43.5 |
| 60 | | 4.14 | 3.5 | | 50.8 |
| 70 | | 4.83 | 4 | | 58 |
| 80 | | 5.52 | 4.5 | | 65.3 |
| 90 | | 6.21 | 5 | | 72.5 |
| 100 | | 6.9 | 5.5 | | 79.8 |
| 110 | | 7.59 | 6 | | 87 |
| 120 | | 8.28 | 6.5 | | 94.3 |
| 130 | | 8.97 | 7 | | 101.5 |
| 140 | | 9.66 | 7.5 | | 108.8 |
| 150 | | 10.34 | 8 | | 116 |
| 160 | | 11.03 | 8.5 | | 123.3 |
| 170 | | 11.72 | 9 | | 130.5 |
| 180 | | 12.41 | 9.5 | | 137.8 |
| 190 | | 13.1 | 10 | | 145 |
| 200 | | 13.79 | 10.5 | | 152.3 |
| 210 | | 14.48 | 11 | | 159.5 |
| 220 | | 15.17 | 11.5 | | 166.8 |
| 230 | | 15.86 | 12 | | 174 |
| 240 | | 16.55 | 12.5 | | 181.3 |
| 250 | | 17.24 | 13 | | 188.5 |
| 260 | | 17.93 | 13.5 | | 195.8 |
| 270 | | 18.62 | 14 | | 203 |
| 280 | | 19.31 | 14.5 | | 210.3 |
| 290 | | 20 | 15 | | 217.5 |
| 300 | | 20.69 | 15.5 | | 224.8 |
| 310 | | 21.38 | 16 | | 232 |
| 320 | | 22.07 | 16.5 | | 239.3 |
| 330 | | 22.76 | 17 | | 246.5 |
| 340 | | 23.45 | 17.5 | | 253.8 |
| 350 | | 24.14 | 18 | | 261 |
| 360 | | 24.83 | 18.5 | | 268.3 |
| 370 | | 25.52 | 19 | | 275.5 |
| 380 | | 26.21 | 19.5 | | 282.8 |
| 390 | | 26.9 | 20 | | 290 |
| 400 | | 27.59 | 20.5 | | 297.3 |

# R-410A PRESSURE TEMPERATURE CHART

| PSIG | TEMP ˚F | PSIG | TEMP ˚F |
|---|---|---|---|
| 0 | -60 | 78 | 20 |
| 2 | -58 | 80 | 21 |
| 4 | -54 | 85 | 24 |
| 6 | -50 | 90 | 26 |
| 8 | -46 | 95 | 29 |
| 10 | -42 | 100 | 32 |
| 12 | -39 | 105 | 34 |
| 14 | -36 | 110 | 36 |
| 16 | -33 | 115 | 39 |
| 18 | -30 | 120 | 41 |
| 20 | -28 | 125 | 43 |
| 22 | -26 | 130 | 45 |
| 24 | -24 | 135 | 47 |
| 26 | -20 | 140 | 49 |
| 28 | -18 | 145 | 51 |
| 30 | -16 | 150 | 53 |
| 32 | -14 | 160 | 57 |
| 34 | -12 | 170 | 60 |
| 36 | -10 | 180 | 64 |
| 38 | -8 | 190 | 67 |
| 40 | -6 | 200 | 70 |
| 42 | -4 | 210 | 73 |
| 44 | -3 | 220 | 76 |
| 46 | -2 | 225 | 78 |
| 48 | 0 | 235 | 80 |
| 50 | 1 | 245 | 83 |
| 52 | 3 | 255 | 85 |
| 54 | 4 | 265 | 88 |
| 56 | 6 | 275 | 90 |
| 58 | 7 | 285 | 92 |
| 60 | 8 | 295 | 95 |
| 62 | 10 | 305 | 97 |
| 64 | 11 | 325 | 101 |
| 66 | 13 | 355 | 108 |
| 68 | 14 | 375 | 112 |
| 70 | 15 | 405 | 118 |
| 72 | 16 | 500 | 134 |
| 74 | 17 | 600 | 149 |
| 76 | 19 | 700 | 159 |

The following factors can be used to convert from English to the most common SI Metric values.

**TABLE 33 -** SI METRIC CONVERSION

| MEASUREMENT | MULTIPLY ENGLISH UNIT | BY FACTOR | TO OBTAIN METRIC UNIT |
|---|---|---|---|
| Capacity | Tons Refrigerant Effect (ton) | 3.516 | Kilowatts (kW) |
| Power | Horsepower | 0.7457 | Kilowatts (kW) |
| Flow Rate | Gallons / Minute (gpm) | 0.0631 | Liters / Second (l/s) |
| Length | Feet (ft) | 0.3048 | Meters (m) |
| | Inches (in) | 25.4 | Millimeters (mm) |
| Weight | Pounds (lbs) | 0.4538 | Kilograms (kg) |
| Velocity | Feet / Second (fps) | 0.3048 | Meters / Second (m/s) |
| Pressure Drop | Feet of Water (ft) | 2.989 | Kilopascals (kPa) |
| | Pounds / Square Inch (psi) | 6.895 | Kilopascals (kPa) |

## TEMPERATURE

To convert degrees Fahrenheit (°F) to degrees Celsius (°C), subtract 32° and multiply by 5/9 or 0.5556.

Example: (45.0°F - 32°) x 0.5556 = 27.2°C

To convert a temperature range (i.e., a range of 10°F) from Fahrenheit to Celsius, multiply by 5/9 or 0.5556.

Example: 10.0°F range x 0.5556 = 5.6 °C range

P.O. Box 1592, York, Pennsylvania USA 17405-1592
Tele. 800-861-1001
www.johnsoncontrols.com
Copyright © by Johnson Controls 2013
Subject to change without notice. Printed in USA
ALL RIGHTS RESERVED
Form 150.72-ICOM6.EN.UL (813)
Issue Date: August 30, 2013
Supersedes: 150.72-ICOM6 (413)

EXHIBIT A

# EQUIPMENT SUBMITTAL FOR APPROVAL

# MCHENRY COUNTY – AIR COOLED CHILLERS

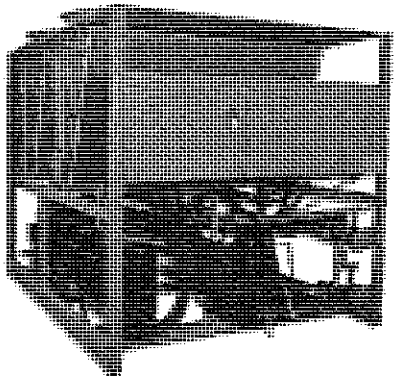

| | |
|---|---|
| **EQUIPMENT:** | Air-Cooled Scroll Chiller |
| **UNIT TAGS:** | ACC-A1, ACC-A2 |
| **QUANTITY:** | 2 |

**PREPARED FOR:**
County of McHenry
2200 N. Seminary Ave., Rm 200
Woodstock, IL 60098

**PREPARED BY:**
Brad Lazzari and Kurt Weiss
Johnson Controls, Inc.
850 W. Jackson Blvd., Suite 420
Chicago, IL 60607

Nov 26th, 2013
**Revision #0**

JCI Project#: 4E41-0035

YORK®

TABLE OF CONTENTS

# TABLE OF CONTENTS


- Submittal notes
- Fabrication timeline
- Bill of material
- Performance Information/ Product Drawing
- General Description
- Technical Data
- Receiving/Rigging instructions
- Installation responsibilities
- Warranty Information
- Start-Up forms

YORK®

## SUBMITTAL NOTES

The following table must be completed prior to releasing the equipment for fabrication. Please initial the column indicating the information contained in this submittal has been verified, or indicate to refer to a marked-up page.

SUBMITTAL NOTES

| SUBMITTAL VERIFICATION | |
|---|---|
| | *Purchaser Initials* |
| Electrical voltage and electrical connections are compatible with jobsite requirements. | |
| Chiller nozzle connections shown in this submittal are correct | |
| Unit tag designations are correct | |
| Equipment dimensions and weights have been verified to comply with jobsite conditions and rigging requirements | |

Please fill out the following table and refer to the receiving/rigging instructions in this submittal to help ensure a smooth delivery and installation of the equipment.

| DELIVERY INFORMATION | |
|---|---|
| | *Please fill out information below* |
| Contact name for coordinating delivery of equipment with transportation company | |
| Contact phone number | |
| Advance notice required from transportation company prior to delivering equipment (typically 48 hours) | |
| Ship to address: | |
| Other special shipping instructions or requirements | |

# EQUIPMENT FABRICATION TIMELINE

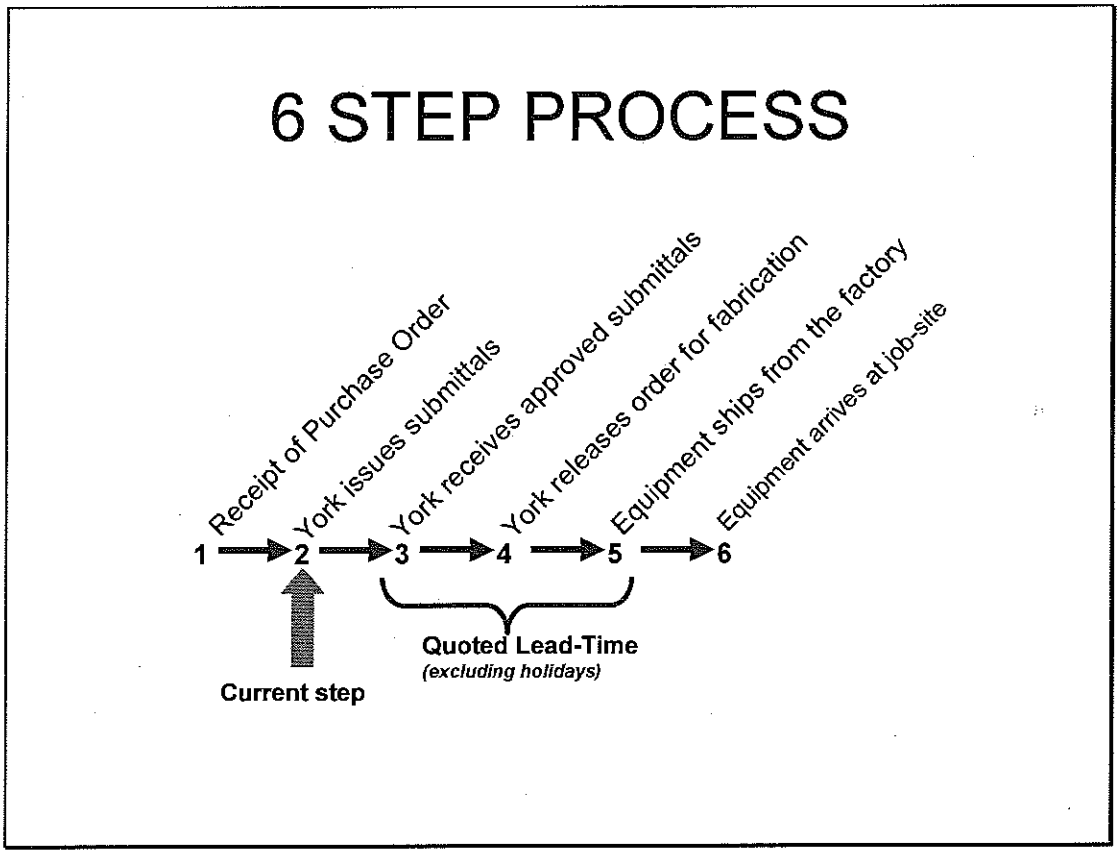


Note that lead times can vary from the time York issues submittals (Step 2) until approved submittals are received (Step 3). Please check with your York Sales Engineer at the time approved submittals are received for the current equipment lead-time.

# BILL OF MATERIAL

| TAG | QTY | MODEL NUMBER |
|---|---|---|
| ACC-A1, ACC-A2 | 2 | YLAA0175HE46XCB |

YORK AIR COOLED SCROLL CHILLERS

**TAGS: ACC-A1, ACC-A2**

Two (2) YORK air-cooled scroll liquid chillers supplied for 460V/3Φ/60Hz operation, complete with:

- High efficiency scroll compressors
- R-410A refrigerant
- Single point power supply with factory mounted circuit breaker
- Service isolation valves
- Control transformer
- 1 – 1/2" evaporator insulation
- **Ultra quiet fans**
- **Compressor sound blankets**
- **Full unit louver enclosure**
- Compressor crankcase heater
- Suction/discharge pressure readout kit
- BACNet / Modbus communication
- 1st year parts & labor warranty (from date of shipment) on entire unit including refrigerant
- Factory start-up by York technicians
- 1st year preventative maintenance
- Submittal, Engineering and IOM Package

ITEMS SUPPLIED BY YORK AND INSTALLED BY OTHERS

- Differential pressure switch
- 2" Spring Isolators

CLARIFICATIONS

- Flow switch shall be field installed

ITEMS NOT INCLUDED

- Hauling or rigging of equipment

# PERFORMANCE INFORMATION / PRODUCT DRAWING

PERFORMANCE INFORMATION / PRODUCT DRAWING

Johnson Controls

# Design Conditions Datasheet

| Unit Tag | Qty | Model No | Net Cooling Capacity (TR) | Nominal Voltage | Refrigerant Type |
|---|---|---|---|---|---|
| ACC-A1 | 2 | YLAA0175HE46XCBBXTX | 159.7 | 460-3-60 | R410A |

| PJN: | | | | | | | | |
|---|---|---|---|---|---|---|---|---|
| YLAA0175HE | 46XCBBXTXA | XXBLXCXX44 | SXXXXXHXDX | YAXXXXX7BX | XLXSB1XXXX | | | |
| ....5...10 | ....5...20 | ....5...30 | ....5...40 | ....5...50 | ....5...60 | ....5...70 | ....5...80 | ....5...90 |

| Evaporator Data | | Evaporator Data (Cont.) | | Performance Data | |
|---|---|---|---|---|---|
| EWT (°F) | 54 | Design Flow Rate (USGPM) | 180 | EER (EER) | 8.2 |
| LWT (°F) | 44 | Max. Flow Rate (USGPM) | 650 | IPLV (EER) | 15.6 |
| Design Flow Rate (USGPM) | 359.9 | | | NPLV (EER) | 15.9 |
| Pressure Drop (ft H2O) | 12 | **Condenser Data** | | **Physical Data** | |
| Fluid | Water | Ambient Temp. Design (°F) | 105 | Rigging Wt. (lb) | 8720 |
| FF | 0.0001 | Altitude (ft) | 0 | Operating Wt. (lb) | 8840 |
| Water Volume (USGAL) | 14.3 | User Min. Operating Air Temp. (°F) | 0 | | |
| | | User Max. Operating Air Temp. (°F) | 105 | | |

| Electrical Data | | | | |
|---|---|---|---|---|
| Circuit | 1 | 2 | 3 | 4 |
| Compressor RLA | 53 / 53 / 53 | 53 / 53 / 53 | | |
| Fan QTY/FLA (each) | 5 / 20 | 5 / 20 | | |
| High LRA Current | 290 / 290 / 290 | 290 / 290 / 290 | | |

| Single Point | | | | |
|---|---|---|---|---|
| Min. Circuit Ampacity | 376 | | | |
| Recommended Fuse/CB Rating | 400 | | | |
| Max. Inverse Time CB Rating | 400 | | | |
| Max. Dual Element Fuse Size (A) | 400 | | | |
| Unit Short Circuit Withstand (STD) | 5 [kA] | | | |
| Wire Lugs Per Phase | 1 + 2 | | **Operating Condition Electrical Data** | |
| Wire Range (Lug Size) | 250 - 500 kcmil + #3/0 AWG - 250 kcmil | | Compressor kW | 217.3 |
| Starter Type | Across The Line | | Total Fan kW | 16.8 |
| | | | Total kW | 234.1 |

Notes:

Certified in accordance with the AHRI Air-Cooled Water Chilling Packages Using Vapor Compression Cycle Certification Program, which is based on AHRI Standard 550/590 (I-P). Certified units may be found in the AHRI Directory at www.ahridirectory.org Auxiliary components included in total KW - Oil heaters, Chiller controls. Auxiliary power is already included in the compressor and fan power

AHRI CERTIFIED

| Part Load Rating Data | | | | |
|---|---|---|---|---|
| Stage | Ambient (°F) | Capacity (TR) | Compressor kW | Unit Efficiency |
| 1 | 105 | 159.7 | 234.1 | 8.2 |
| 2 | 95 | 146.4 | 172.2 | 10.2 |
| 3 | 95 | 120.8 | 134.4 | 10.8 |

| | | | | |
|---|---|---|---|---|
| 4 | 95 | 90.4 | 101.9 | 10.6 |
| 5 | 95 | 57.5 | 64.9 | 10.6 |
| 6 | 95 | 27.8 | 32.3 | 10.3 |

| Sound Power Levels (In Accordance with AHRI 370) | | | | | | | | | | |
|---|---|---|---|---|---|---|---|---|---|---|
| Stage | Ambient (°F) | 63 | 125 | 250 | 500 | 1K | 2K | 4K | 8K | LWA |
| 1 | 105 | 96 | 95 | 91 | 91 | 87 | 84 | 80 | 77 | 93 |
| 2 | 95 | 96 | 95 | 91 | 91 | 87 | 83 | 80 | 77 | 93 |
| 3 | 95 | 96 | 95 | 91 | 91 | 87 | 83 | 80 | 77 | 93 |
| 4 | 95 | 96 | 95 | 91 | 91 | 87 | 83 | 80 | 77 | 93 |
| 5 | 95 | 92 | 91 | 87 | 87 | 83 | 79 | 76 | 73 | 89 |
| 6 | 95 | 89 | 88 | 84 | 84 | 80 | 76 | 73 | 70 | 86 |

NOTES:

1. PLACEMENT ON A LEVEL SURFACE FREE OF OBSTRUCTIONS (INCLUDING SNOW, FOR WINTER OPERATION) OR AIR RECIRCULATION ENSURES RATED PERFORMANCE, RELIABLE OPERATION AND EASE OF MAINTENANCE. SITE RESTRICTIONS MAY COMPROMISE MINIMUM CLEARANCES INDICATED BELOW, RESULTING IN UNPREDICTABLE AIR FLOW PATTERNS AND POSSIBLE DIMINISHED PERFORMANCE. YORK'S UNIT CONTROLS WILL OPTIMIZE OPERATION WITHOUT NUISANCE HIGH PRESSURE SAFETY CUTOUT. HOWEVER, THE SYSTEM DESIGNER MUST CONSIDER POTENTIAL PERFORMANCE DEGRADATION.

   RECOMMENDED MINUMUM CLEARANCES:
   SIDE TO WALL - 6'
   REAR TO WALL - 6'
   CONTROL PANEL TO WALL - 4'
   TOP - NO OBSTRUCTIONS ALLOWED
   DISTANCE BETWEEN ADJACENT UNITS - 10'.
   NO MORE THAN ONE ADJACENT WALL MAY BE HIGHER THAN THE UNIT.

2. WEIGHTS (LB): SHIPPING - 8,719; OPERATING - 8,841.

3. CENTER OF GRAVITY FROM ORIGIN: X= 98.6"; Y= 51.5".

4. INSTALLING CONTRACTOR MUST INCLUDE VENT AND DRAIN ACCOMODATIONS IN CHILLED WATER PIPING NEAR THE EVAPORATOR.

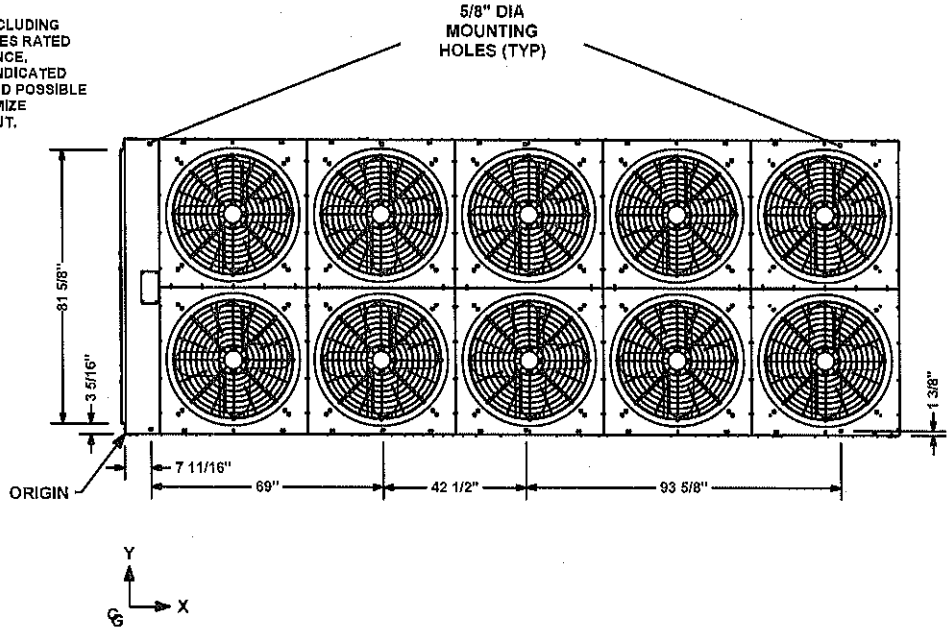


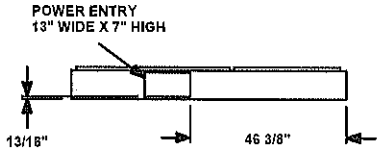


CONTROL PANEL
BOTTOM DETAIL

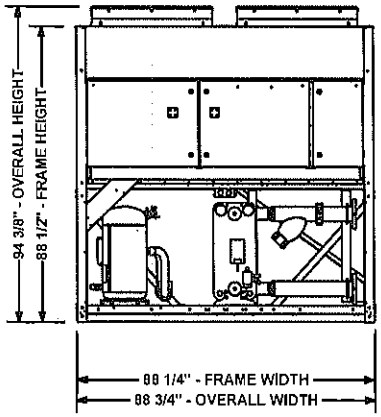


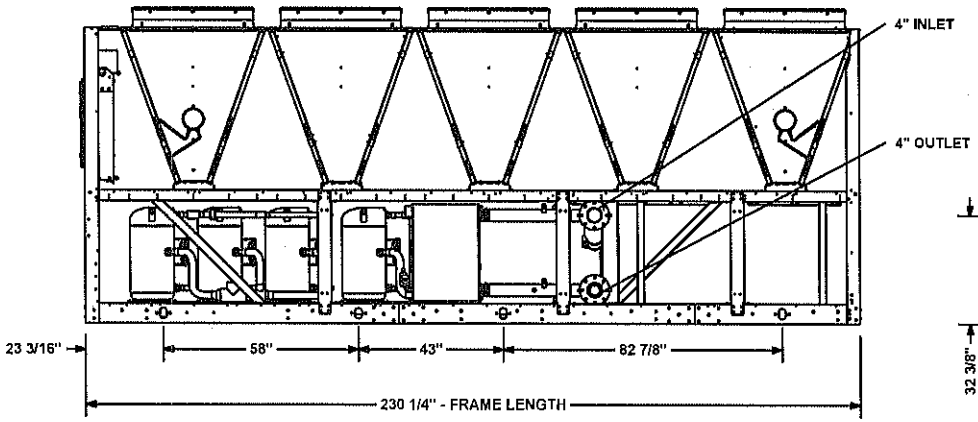


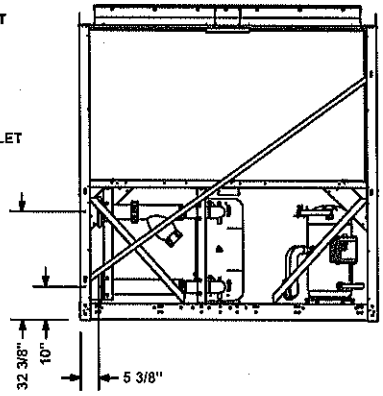


| | | | |
|---|---|---|---|
| **PRODUCT DRAWING**<br>MODEL: YLAA0175HE46<br>NOT FOR CONSTRUCTION | Project Name : KMW: McHenry County<br>Location :<br>Engineer :<br>Contractor :<br>For : | Sold To :<br>Cust Purch Order# :<br>York Contract# : 4E410035<br>UNIT TAG: **ACC-A1** | Date : 11/25/2013 16:57:44<br>Rev. Date :<br>Form :<br>Dwg. Lev. :<br>Dwg. Scale : NTS |

YORK®
A JOHNSON CONTROLS COMPANY

# GENERAL DESCRIPTION

# Introduction

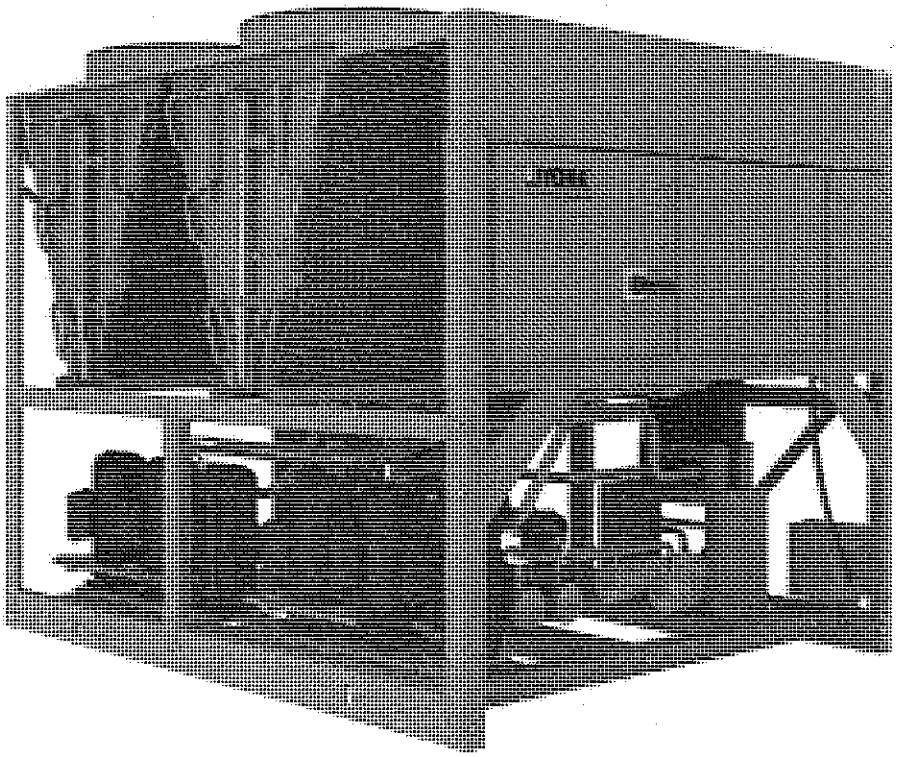

Johnson Controls, the building efficiency leader, is proud to present the YORK Model YLAA Air-Cooled Scroll Chiller.

## FEATURES & BENEFITS

### Installation

The YLAA chiller arrives as a factory-assembled package ready to be installed outdoors, either on the roof or at ground level. The air-cooled condensers eliminate the capital, installation and maintenance costs of a cooling-tower circuit.

The YLAA weighs less and has s smaller footprint than other chillers in its class. In fact, it is 20-35% lighter weight than the market average chiller. When the chiller is roof-mounted in new construction, the cost of the support structure can be reduced. In building retrofits, the YLAA can provide the largest capacity in a given space and existing structure.

Power hook-up could not be any easier with the standard single-point connection. A terminal block, disconnect switch or circuit breaker is provided to meet the unique needs of every project and minimize installation time and labor. The factory-installed control transformer steps down the power voltage to the control voltage.

Chilled-water piping is also simple. The water connections are factory-piped to the outside of the unit, for ease of access. Factory-cut grooves, or optional flanges, make piping connections simple. Optional factory-installed pump kits eliminate the time, cost, and mechanical-equipment room space necessary to install chilled-water pumps.

Press the start button with confidence – your YLAA has been run-tested at the factory to ensure that you will have a successful start-up.

# Introduction

**Reliability**
The YLAA chiller is proven and reliable, designed to reduce service calls. The scroll compressors have logged hundreds of thousands of operating hours in numerous different applications. The corrosive-resistant condenser heat exchangers have been specifically designed for stationary HVAC applications and have undergone extensive laboratory and field testing to extend chiller life and improve performance. They are also more rigid than standard condenser coils, making them less susceptible to damage during rigging, lifting, and installation of the chiller.

Components are designed to keep the chiller up-and-running. A factory-installed water strainer prevents debris from affecting unit flow and/or heat transfer. The rugged thermal-dispersion flow switch is factory-installed at the optimum location in the piping for superior flow sensing, reducing the potential for nuisance trips. Intelligent controls protect the chiller while keeping it online, for maximum uptime. Exterior panels of the chiller are powder-coated with highly durable corrosion-resistant paint.

**Efficiency**
YLAA high-efficiency chillers, with their innovative control algorithms, offer industry-leading energy efficiency. Real-world energy efficiency is measured by IPLV (off-design) performance, and YLAA chillers provide some of the best IPLVs in their class.

YLAA also offers an efficiency choice. In addition to the high-efficiency units, YLAA chillers are available in standard efficiency models with smaller footprints and lower capital costs.

Only pay for the chiller you need – the multi-efficiency levels of the YLAA allow you to decide the best investment for the job.

**Flexibility**
The YLAA chiller offers a number of options designed to operate reliably across a wide range of customer needs. It can cool glycol down to 10°F (-12°C). It can provide heat recovery up to 140°F (60°C), with up to 85% of total heat rejection captured.

When factory-mounted pump kits are considered, there are now more pump sizes to choose from. The optional kits come standard with valves, pressure ports, flow switch, and strainer for quick hook-up, and frost protection to prevent freeze-up. There are also more pump options available: variable-speed drives, dual pumps, service shut-off valves, expansion tanks, and additional test ports for temperature and pressure sensing.

Standard low sound and multiple sound attenuation options allow flexibility in locating the chiller, and reduce the cost for field-constructed barriers.

**Sustainability**
The YLAA makes you a leader in sustainability through innovation, not added cost. With the combination of R-410A refrigerant, which has no ozone-depletion potential, and state-of-the-art heat exchanger technology that allows refrigerant charge to be reduced by as much as 30%, the YLAA chiller provides the most ecologically friendly equipment. Partnered with its low-sound properties for noise pollution prevention, this chiller is a true earth-friendly offering.

**Communications**
The YLAA chiller comes standard with native communication capability for BACnet (MS/TP), Modbus, and N2, with optional capabilities available for LON. The standard unit capabilities include built-in-scheduling, remote start-stop, remote water temperature reset and up to two steps of demand (load) limiting depending on model. The standard control panel can be directly connected to a Johnson Controls Building Automated System via the standard factory-installed RS232 communication port.

**Serviceability**
Minimal maintenance is required to keep the unit operating at maximum performance. If service should ever be required, the YLAA chiller has been designed to simplify the work, keeping costs down. The layout of the chiller locates all the major components that can be serviced near the outside edge. The condenser heat exchangers are light enough that no crane is required for replacement. And when it's time to clean them, city tap water, with water pressure typical of a spray from a common garden hose, is all that's needed.

# Nomenclature

## NOMENCLATURE

**The model number denotes the following characteristics of the unit:**

**Y L A A 0125 H E 46 X C B**

- **Y** — York Chiller
- **L** — Compressor Type L=Scroll
- **A** — Air Cooled
- **A** — A = Americas
- **0125** — Four Digit Unit Number
- **H** — Unit Efficiency Designator
  - S = Standard Efficiency
  - H = High Efficiency
- **E** — Refrigerant
  - E = R-410A
- **46** — Voltage Code
  - 17 = 200-3-60
  - 28 = 230-3-60
  - 40 = 380-3-60
  - 46 = 460-3-60
  - 58 = 575-3-60
- **X** — X = Across The Line Start
- **C** — C = Design Series (MCHX)
- **B** — B = Development Level (BPHX)

# Equipment Overview

## GENERAL

The 70 - 120 Ton (246 - 422 kW) **YLAA** models are shipped complete from the factory ready for installation and use.

The unit is pressure-tested, evacuated, and fully charged with a zero Ozone Depletion Potential Refrigerant R-410A and includes an initial oil charge. After assembly, a complete operational test is performed with water flowing through the evaporator to assure that the refrigeration circuit operates correctly.

The unit structure is heavy-gauge, galvanized steel. This galvanized steel is coated with baked-on powder paint, which, when subjected to ASTM B117 1000 hour, salt spray testing, yields a minimum ASTM 1654 rating of "6". Units are designed in accordance with NFPA 70 (National Electric Code), ASHRAE/ANSI 15 Safety code for mechanical refrigeration, ASME and rated in accordance with AHRI Standard 550/590.

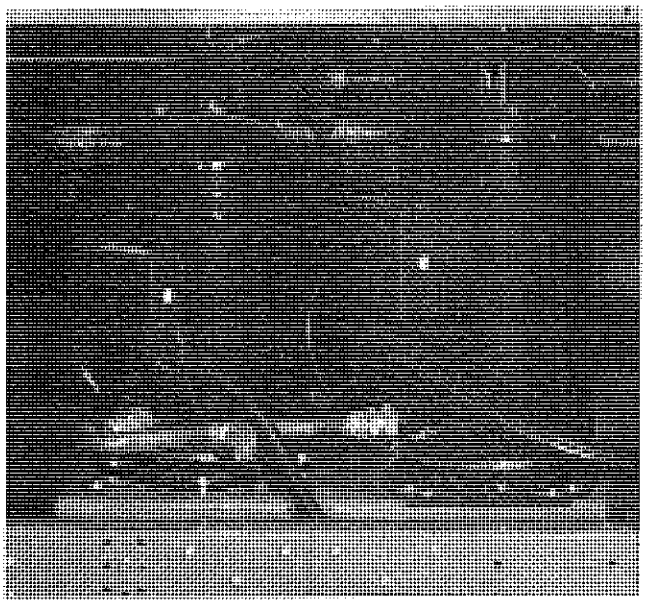

## COMPRESSORS

The chiller has suction-gas cooled, hermetic scroll compressors. The YLAA compressors incorporate a compliant scroll design in both the axial and radial direction. All rotating parts are statically and dynamically balanced. A large internal volume and oil reservoir provides greater liquid tolerance. Compressor-crankcase heaters are also included for extra protection against liquid migration.

## BRAZED PLATE EVAPORATOR

The compact, high efficiency Brazed Plate Heat Exchanger (BPHE) is constructed with 316L stainless steel corrugated channel plates with a filler material between each plate. It offers excellent heat transfer performance with a compact size and low weight, reducing structural steel requirements on the job site.

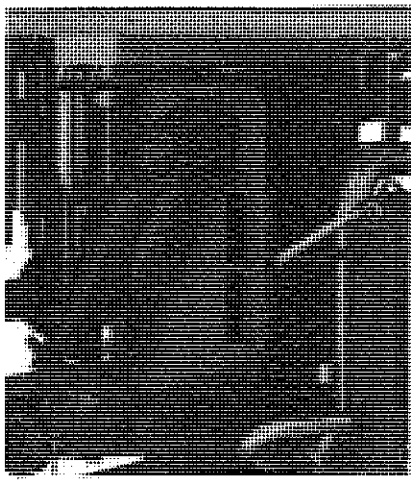

The heat exchanger is manufactured in a precisely controlled vacuum-brazing process that allows the filler material to form a brazed joint at every contact point between the plates, creating complex channels. The arrangement is similar to older plate and frame technology, but without gaskets and frame parts.

Water inlet and outlet connections are 3" in diameter and are grooved for compatibility with field supplied ANSI/AWWA C-606 couplings.

A 1/16" (1.6mm) mesh wye-strainer is provided as standard to provide protection at the evaporator inlet, particularly at system start-up when construction debris may be present in the piping system.

The evaporator is equipped with a thermostat-controlled heater. The heater provides freeze protection for the evaporator down to -20°F (-29°C) ambient. The evaporator is covered with 3/4" flexible, closed-cell, foam insulation (K=0.25).

A factory-wired flow switch is standard, installed in a pipe section at the outlet of the evaporator.

## CANADIAN REGISTRATION NUMBER (CRN) APPLICATION & PROOF OF CONFORMANCE

Reference Table 1 on page 7 for YLAA brazed plate evaporator Canadian Registration Numbers (CRN) for all Canadian Provinces. Since all YLAA brazed plate evaporators are categorized as pressure "H" fittings per CSA-B51, a CRN label or marking is not provided on the evaporator. According to the Canadian Standards Association's Boiler, pressure vessel, and pressure piping code B-51 (2009

version), a product registered as a category "H" fitting does not require a label or marking displaying the CRN.

TABLE1 - CANADIAN REGISTRATION NUMBERS

| CANADIAN PROVINCE | CRN# |
|---|---|
| BC | OH13953.51 |
| AB | OH13953.52 |
| ON | OH13953.5 |
| PQ/MB/SK | OH13953.56 |
| NB | OH13953.57 |
| NS | OH13953.58 |
| PEI | OH13953.59 |
| NF | OH13953.50 |
| NU | OH13953.5N |
| NWT | OH13953.5T |
| YU | OH13953.5Y |

## CONDENSER

**Coils** - Condenser coils are made of a single material to

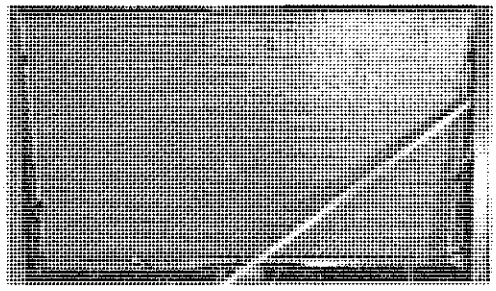

avoid galvanic corrosion due to dissimilar metals. Coils and headers are brazed as one piece. Integral sub cooling is included. The design working pressure of the coil is 650 PSIG (45 bar). Condenser coil is easily washable with clear water up to 100 psi (7 bar).

**Fans** – The condenser fans are composed of corrosion resistant aluminum hub and glass-fiber-reinforced polypropylene composite blades molded into a low-noise airfoil section. They are designed for maximum efficiency and are statically and dynamically balanced for vibration-free operation. They are directly driven by independent motors,

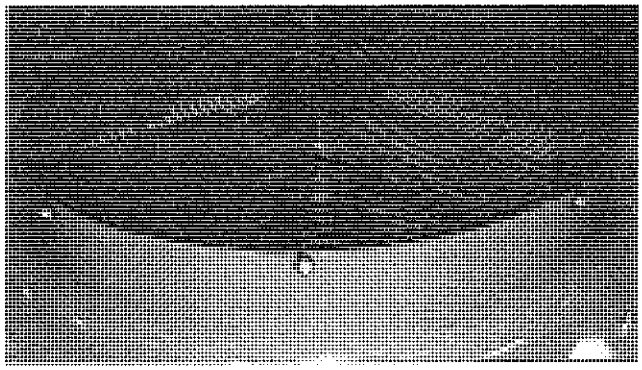

and positioned for vertical air discharge. The fan guards are constructed of heavy-gauge, rust-resistant, coated steel. All blades are statically and dynamically balanced for vibration-free operation.

**Motors** – The fans are driven by Totally Enclosed Air-Over, squirrel-cage type, current protected motors. They feature ball bearings that are double-sealed and permanently lubricated.

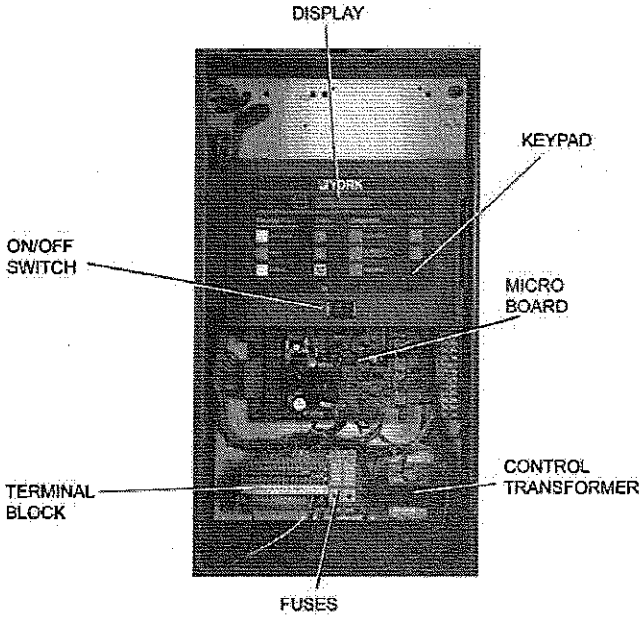


## UNIT CONTROL SYSTEM

The YLAA chiller is designed with an intelligent control system that operates the chiller automatically with maximum reliability, safety and ease of use. The controls are factory tested and with as little user input as a chilled liquid setpoint the chiller will operate to meet the load demand.

The control system includes native BACnet MS/TP, Modbus and N2 communications, with LON protocol served through an optional eLink communications card.

The operating program is stored in non-volatile memory (EPROM), so power failures and battery discharge will not require reprogramming the chiller. Programmed setpoints are retained in lithium battery-backed RTC memory for 5 years minimum.

Unit alarm contacts are standard. Contacts for remote chilled liquid temperature reset and two steps of demand load limiting are also standard, for projects without BAS or for redundancy.

Maximum reliability is achieved through intelligent control. Run hours and starts are averaged across all compressors automatically, and between both pumps of the optional

# Equipment Overview

dual pump hydro-kit. When compressors are cycled off, an anti-recycle timer ensures the motors have time to cool before starting again, for the maximum service life. At unit shutdown, the unit pumps down automatically to prevent liquid refrigerant from entering the compressors at restart, which can cause premature bearing wear and other compressor damage.

Liquid temperature sensors provide feedback to the controller, and logic predicts when additional capacity will be required based on how quickly the unit has loaded or unloaded in the past. This prevents unnecessary compressor cycling and helps maintain setpoint accurately.

If there is a problem that prevents the unit operating properly, the controls are designed to allow the unit to operate safely while making as much capacity as possible. For example, if airflow to the condenser coil is diminished due to a dirty coil, the chiller will unload slightly to provide maximum capacity possible while remaining within the unit operating envelope.

If a fault prevents the unit from starting or causes it to shutdown, the chiller will attempt to restart three times. If it cannot start, a manual reset is required to alert the operator about the fault condition. The fault history is stored in the unit controller RTC memory for the last six fault shutdown conditions. An RS-232 port provides capability to print hard copy reports (printer available separately). All controls are contained in a NEMA 3R cabinet with a hinged outer door and includes a liquid crystal display (LCD) with light emitting diode (LED) backlighting for outdoor viewing. There are two display lines, each with twenty text characters per line, and a color coded 12-button non-tactile keypad with sections for display, entry and printing.

**DISPLAY/PRINT** provides quick access to frequently needed information:

- Chilled liquid temperatures
- Ambient temperature
- System pressures (each circuit)
- Operating hours and starts (each compressor)
- Operating data for the systems

**ENTRY** section allows entering setpoints or modifying system values.

**SETPOINTS** updating can be performed to:

- Chilled liquid temperature setpoint and range
- Remote reset temperature range
- Set daily schedule/holiday for start/stop
- Manual override for servicing
- Low and high ambient cut-outs
- Number of compressors
- Low liquid temperature cut-out
- Low suction pressure cut-out
- High discharge pressure cut-out
- Anti-recycle timer (compressor start cycle time)
- Anti-coincident timer (delay compressor starts)

**UNIT** section to:

- Set time
- Set unit options

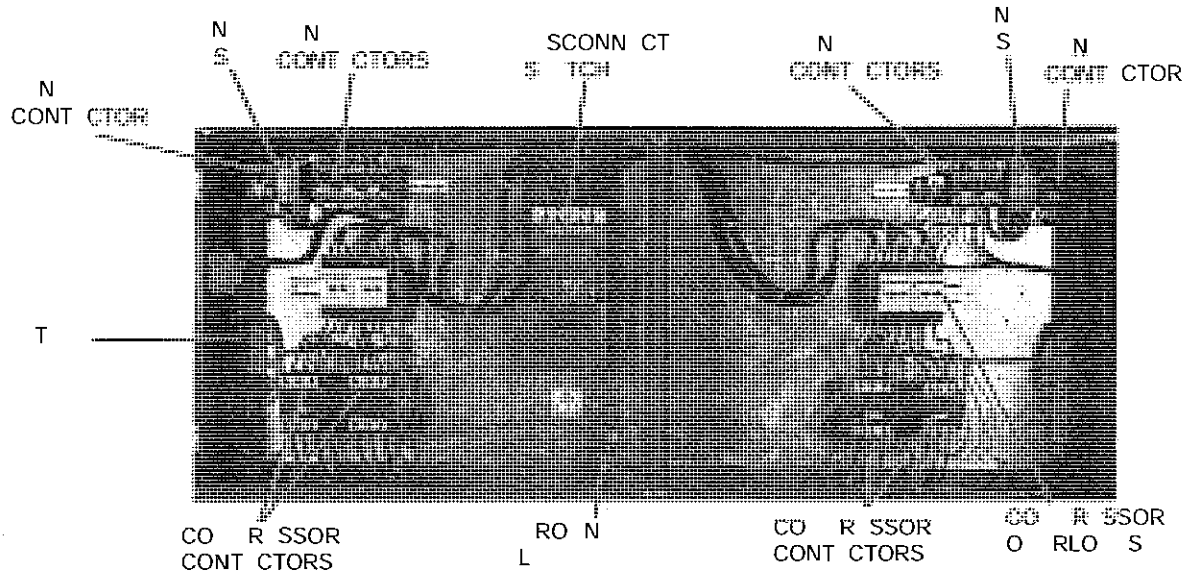

In addition, the microprocessor control center is capable of displaying the following data points:

- Return and leaving liquid temperature
- Low leaving liquid temperature cut-out setting
- Low ambient temperature cut-out setting
- Outdoor air temperature
- English or Metric data
- Suction pressure cut-out setting
- Each system suction pressure
- Discharge pressure (optional)
- Anti-recycle timer status for each system
- Anti-coincident system start timer condition
- Compressor run status
- No cooling load condition
- Day, date and time
- Daily start/stop times
- Holiday status
- Automatic or manual system lead/lag control
- Lead system definition
- Compressor starts & operating hours (each compressor)
- Status of hot gas valves, evaporator heater and fan operation
- Run permissive status
- Number of compressors running
- Liquid solenoid valve status
- Load & unload timer status
- Water pump status

## COMMUNICATIONS

- Native communication capability for BACnet (MS/TP), Modbus and N2
- Optional communciation available for N2 via eLink option

## BUILDING AUTOMATION SYSTEM INTERFACE

In addition to native BACnet, Modbus and N2, the YLAA chiller accepts a 4-20 milliamp or 0-10VDC input to reset of the leaving chilled liquid temperature. The standard unit capabilities include remote start-stop, remote water temperature reset via up to two steps of demand (load) limiting depending on model. The standard control panel can be directly connected to a Johnson Controls Building Automated System via the standard on-board RS232 communication port. (Factory- installed)

## POWER PANEL

Each panel contains:

- Compressor power terminals
- Compressor motor starting contactors per I.E.C.
- Control power terminals to accept incoming for 115-1-60 control power
- Fan contactors & overload current protection

The power wiring is routed through liquid-tight conduit to the compressors and fans.

# Unit Components

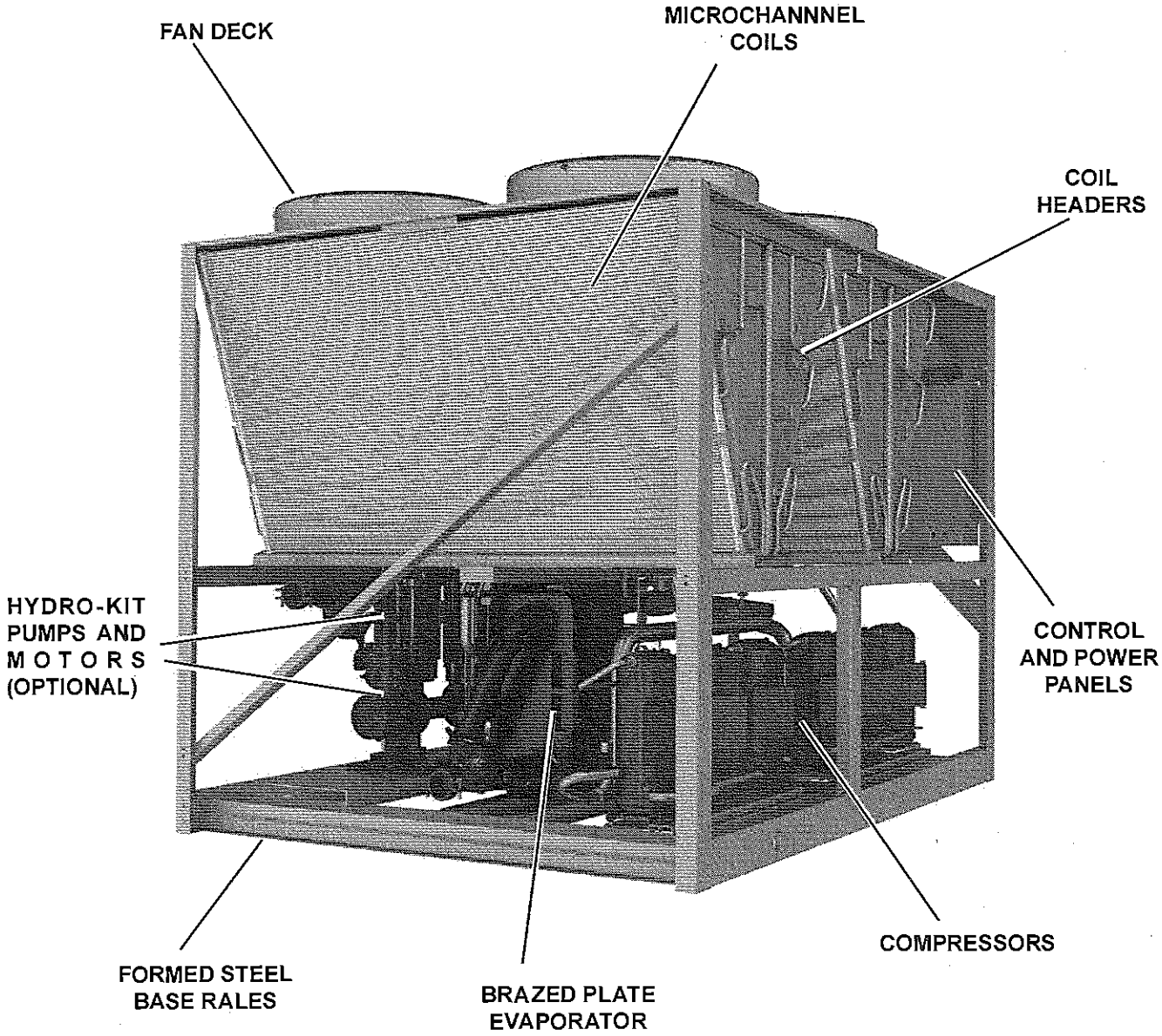


**FIG.1** – GENERAL UNIT COMPONENTS

# Accessories and Options

## POWER OPTIONS:

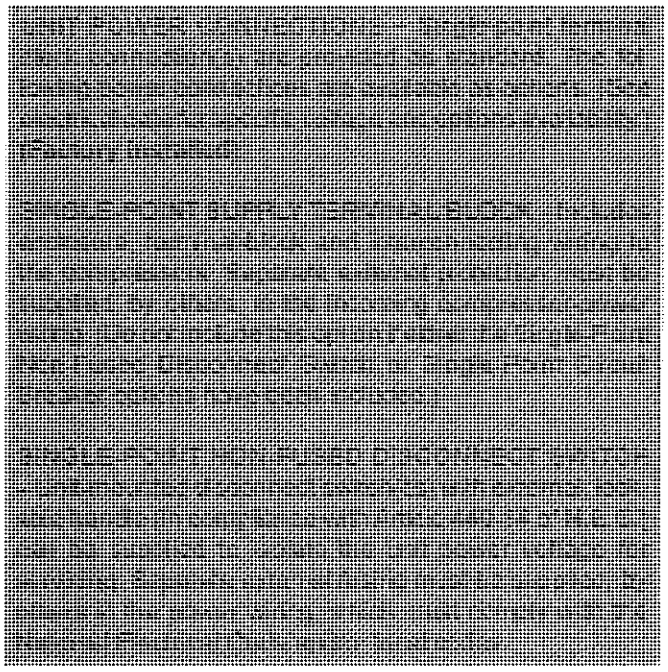

**SINGLE-POINT CIRCUIT BREAKER** – A unit mounted circuit breaker with external, lockable handle (in compli ance with NEC Article 440-14), can be supplied to isolate the power voltage for servicing. (This option includes the Single-Point Power connection.)

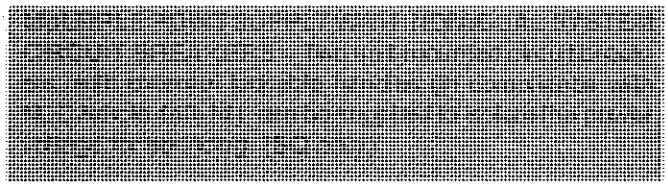

**CONTROL TRANSFORMER** – Converts unit power voltage to 115-1-60 (0.5 or 1.0 kVA capacity). Factory mounting includes primary and secondary wiring between the transformer and the control panel. **(Factory installed)**

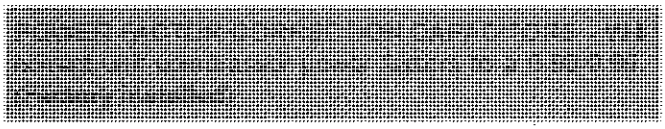

## CONTROL OPTIONS:

**HIGH AMBIENT KIT** – Allows units to operate when the ambient temperature is above 115°F (46°C). Includes sun shield panels and discharge pressure transducers.

**LOW AMBIENT KIT** – Standard units will operate to 30°F (-1°C). This accessory includes all necessary components to permit chiller operation to 0°F (-18°C). (This option includes the discharge pressure transducer /readout capa bility option.) For proper head pressure control in applica tions below 30°F (-1°C) where wind gusts may exceed 5 mph, it is recommended that optional condenser louvered enclosure panels also be included. (Factory installed)

**LANGUAGE LCD AND KEYPAD DISPLAY** – Span ish, French, German, and Italian unit LCD controls and keypad display available. Standard language is English.

## COMPRESSOR, PIPING, EVAPORATOR OPTIONS:

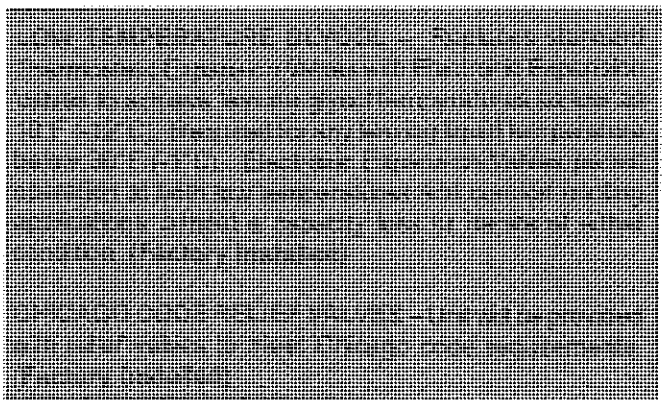

**SERVICE SUCTION ISOLATION VALVE** – Service suc tion discharge (ball-type) isolation valves are added to unit per system (discharge service ball-type isolation valve is standard on each circuit). **(Factory installed)**

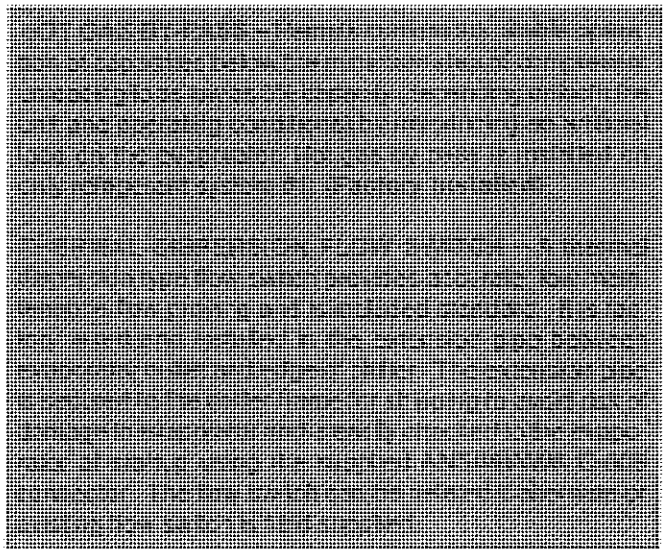

**EVAPORATOR NOZZLE EXTENSION KIT** – Pipe and ANSI/AWWA C-606 fittings to extend the evaporator con nections to the outside of the chiller. Includes the Thermal Dispersion Flow Switch. Provided as standard on all chill ers but can be deleted if alternate or existing piping and flow switch is field supplied. The extension pipe is secured to the chiller frame for shipping to avoid risk of damage

# Accessories and Options

to evaporator and is easily attached to the evaporator at startup using the supplied ANSI/AWWA C-606 connector. A support bracket for the extension kit or field piping is standard on all chillers. Extension kit insulation and heat trace to be field provided if required.

## CONDENSER AND CABINET OPTIONS:

Condenser coil protection against corrosive environments is available by choosing any of the following options. For additional application recommendations, refer to FORM 150.12-ES1. (**Factory installed**)

**ENCLOSURE PANELS (UNIT)** – Tamperproof enclosure panels prevent unauthorized access to units. Enclosure panels can provide an aesthetically pleasing alternative to expensive fencing. Additionally, for proper head pres sure control, Johnson Controls recommends the use of Condenser Louvered Panels for winter applications where wind gusts may exceed five miles per hour (8 kph). The following types of enclosure panels are available:

**LOUVERED PANELS (FULL UNIT)** – Louvered panels surround the front, back, and sides of the unit. They prevent unauthorized access and visually screen unit components. Unrestricted air flow is permitted through generously sized louvered openings. This option is ap plicable for any outdoor design ambient temperature up to 115°F (46°). (**Factory installed**)

**COIL END HAIL GUARD** – Louvered panel attached to exposed coil end. (Factory installed)

## SOUND ATTENUATION

One or both of the following sound attenuation options are recommended for residential or other similar sound sensitive locations.

**COMPRESSOR ACOUSTIC SOUND BLANKET** – Each compressor is individually enclosed by an acoustic sound blanket. The sound blankets are made with one layer of acoustical absorbent textile fiber of 5/8" (15mm) thickness; one layer of heavy duty anti-vibration material thickness of 1/8" (3mm). Both are closed by two sheets of welded PVC, reinforced for temperature and UV resistance. (**Factory installed**)

**ULTRA QUIET FANS** – Lower RPM, 8-pole fan motors are used with steeper-pitch fans. (**Factory installed**)

## VIBRATION ISOLATION

**VIBRATION ISOLATORS** – Level adjusting, spring type 1" (25.4mm) 2" (50.8 mm) deflection, neoprene isola tors for mounting under unit base rails. (**Field installed**)

# Design Parameters

| MODEL YLAA | NOMINAL EVAPORATOR WATER FLOW | | | | | |
|---|---|---|---|---|---|---|
| | TEMPERATURE (°F) | | WATER FLOW (GPM) | | AIR ON CONDENSER (°F) | |
| | MIN[1] | MAX[2] | MIN | MAX | MIN[3] | MAX[4] |
| 0070SE | 40 | 55 | 60 | 285 | 0 | 125 |
| 0080SE | 40 | 55 | 100 | 355 | 0 | 125 |
| 0090SE | 40 | 55 | 100 | 385 | 0 | 125 |
| 0100SE | 40 | 55 | 100 | 385 | 0 | 125 |
| 0115SE | 40 | 55 | 100 | 385 | 0 | 125 |
| 0120SE | 40 | 55 | 150 | 625 | 0 | 125 |
| 0136SE | 40 | 55 | 150 | 625 | 0 | 125 |
| 0155SE | 40 | 55 | 150 | 625 | 0 | 125 |
| 0170SE | 40 | 55 | 150 | 625 | 0 | 125 |
| HIGH EFFICIENCY | | | | | | |
| 0091HE | 40 | 55 | 100 | 385 | 0 | 125 |
| 0101HE | 40 | 55 | 100 | 385 | 0 | 125 |
| 0125HE | 40 | 55 | 100 | 385 | 0 | 125 |
| 0142HE | 40 | 55 | 150 | 625 | 0 | 125 |
| 0156HE | 40 | 55 | 150 | 625 | 0 | 125 |
| 0175HE | 40 | 55 | 150 | 625 | 0 | 125 |

**NOTES:**

1. For leaving liquid temperature below 40°F (4°C) (to 10°F [-12°C]) optional low temperature glycol kit required. Contact your nearest Johnson Controls Office for application requirements.
2. For leaving liquid temperature higher than 55°F (13°C), contact the nearest Johnson Controls Office for application guidelines.
3. The evaporator is protected against freezing to -20°F (-29°C) with an electric heater as standard.
4. For operation at temperatures above 115°F (46°C), the optional High Ambient Kit will need to be installed on the system.

YORK®

# TECHNICAL DATA

TECHNICAL DATA

# SECTION 5 – TECHNICAL DATA
## OPERATIONAL LIMITATIONS (ENGLISH)

**TABLE 3 -** TEMPERATURES AND FLOWS

| UNIT DESIGNATION | TEMPERATURE | | WATER FLOW (GPM) MIN | WATER FLOW (GPM) MAX | AIR ON CONDENSER (°F) | |
|---|---|---|---|---|---|---|
| | MIN[1] | MAX[2] | | | MIN[3] | MAX[4] |
| **STANDARD EFFICIENCY** | | | | | | |
| **YLAA0070SE** | 40 | 55 | 60 | 285 | 0 | 125 |
| **YLAA0080SE** | 40 | 55 | 100 | 355 | 0 | 125 |
| **YLAA0090SE** | 40 | 55 | 100 | 385 | 0 | 125 |
| **YLAA0100SE** | 40 | 55 | 100 | 385 | 0 | 125 |
| **YLAA0115SE** | 40 | 55 | 100 | 385 | 0 | 125 |
| **YLAA0120SE** | 40 | 55 | 150 | 625 | 0 | 125 |
| **YLAA0136SE** | 40 | 55 | 150 | 625 | 0 | 125 |
| **YLAA0155SE** | 40 | 55 | 150 | 625 | 0 | 125 |
| **YLAA0170SE** | 40 | 55 | 150 | 625 | 0 | 125 |
| **HIGH EFFICIENCY** | | | | | | |
| **YLAA0091HE** | 40 | 55 | 100 | 385 | 0 | 125 |
| **YLAA0101HE** | 40 | 55 | 100 | 385 | 0 | 125 |
| **YLAA0125HE** | 40 | 55 | 100 | 385 | 0 | 125 |
| **YLAA0142HE** | 40 | 55 | 150 | 625 | 0 | 125 |
| **YLAA0156HE** | 40 | 55 | 150 | 625 | 0 | 125 |
| **YLAA0175HE** | 40 | 55 | 150 | 625 | 0 | 125 |

**NOTES:**
1. For leaving liquid temperature below 40°F (4°C) (to 10°F [-12°C]) optional low temperature glycol kit required. Contact your nearest Johnson Controls Office for application requirements.
2. For leaving liquid temperature higher than 55°F (13°C), contact the nearest Johnson Controls Office for application guidelines.
3. The evaporator is protected against freezing to -20°F (-29°C) with an electric heater as standard.
4. For operation at temperatures above 115°F (46°C), the optional High Ambient Kit will need to be installed on the system.

CAUTION

***Excessive flow will cause damage to the cooler. Do not exceed maximum cooler flow. Special care should be taken when multiple chillers are fed by a single pump.***

# HEAT EXCHANGER FLOW, GPM

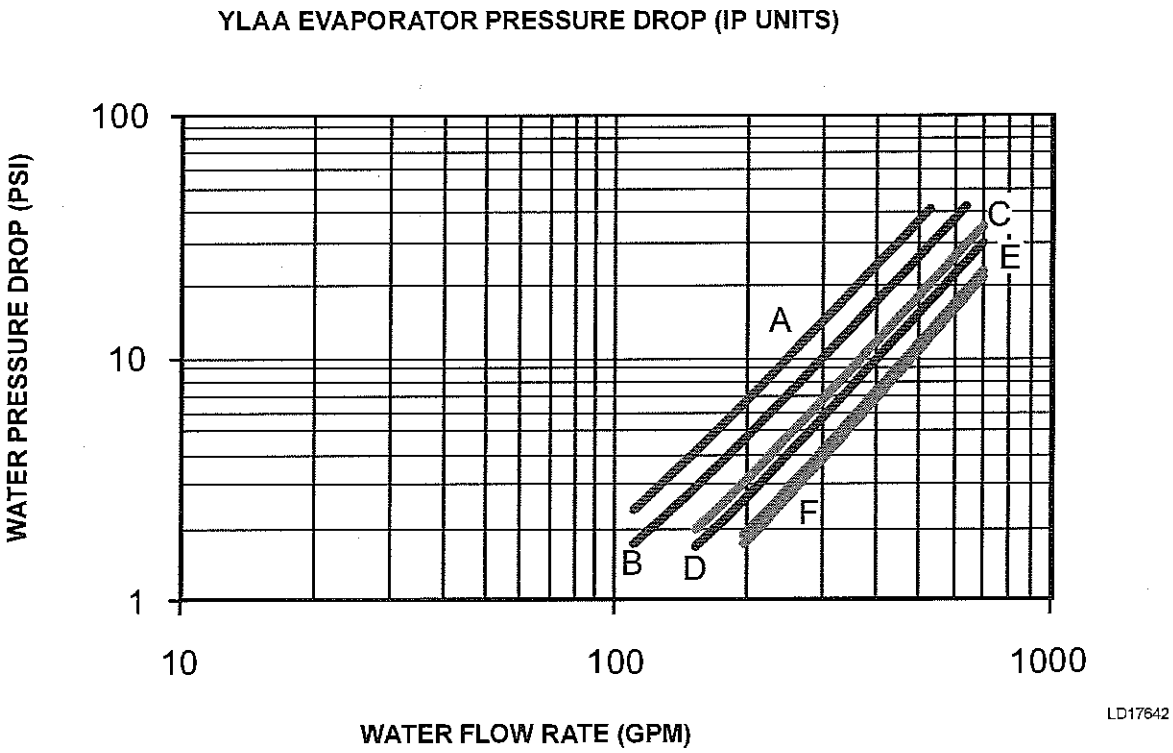


| EVAPORATOR | YLAA MODELS |
|---|---|
| A | 70SE |
| B | 80SE |
| C | 90SE,91HE, 100SE, 101HE, 115SE, 0125HE |
| D | 0136SE, 0170SE, 0156HE |
| E | 0120SE, 0155SE, 0142HE |
| F | 0175HE |

**TABLE 4 -** ETHYLENE AND PROPYLENE GLYCOL CORRECTION FACTORS

**ETHYLENE GLYCOL**

| % WEIGHT | TONS | COMPR KW | GPM F/ TON | PRESS DROP | FREEZE PT |
|---|---|---|---|---|---|
| **10.0** | 1.0 | 1.0 | 24.3 | 1.0 | 26.2 |
| **20.0** | 1.0 | 1.0 | 25.1 | 1.1 | 17.9 |
| **30.0** | 1.0 | 1.0 | 25.9 | 1.2 | 6.7 |
| **40.0** | 1.0 | 1.0 | 26.9 | 1.4 | -8.1 |
| **50.0** | 1.0 | 1.0 | 28.0 | 1.6 | -28.9 |

**PROPYLENE GLYCOL**

| % WEIGHT | TONS | COMPR KW | GPM F/ TON | PRESS DROP | FREEZE PT |
|---|---|---|---|---|---|
| **10.0** | 1.0 | 1.0 | 24.0 | 1.0 | 26.0 |
| **20.0** | 1.0 | 1.0 | 24.3 | 1.1 | 19.0 |
| **30.0** | 1.0 | 1.0 | 24.9 | 1.3 | 9.0 |
| **40.0** | 1.0 | 1.0 | 25.6 | 1.4 | -6.0 |
| **50.0** | 0.9 | 1.0 | 26.6 | 1.7 | -28.0 |

**NOTE:** Water Pressure Drop Curves may extend past the minimum and maximum water flow ranges.

**TABLE 5 -** PHYSICAL DATA (ENGLISH) 60 HZ (CONT'D)

| REFRIGERANT R-410A | YLAA HIGH EFFICIENCY UNITS | | | | | |
|---|---|---|---|---|---|---|
| | 0091HE | 0101HE | 0125HE | 0142HE | 0156HE | 0175HE |
| **NOMINAL RATINGS[3]** | | | | | | |
| TONS | 88.2 | 98.5 | 116.0 | 129.5 | 144.5 | 172.5 |
| KW INPUT | 88.2 | 106.1 | 122.0 | 138.9 | 153.0 | 194.2 |
| EER | 10.8 | 10.2 | 10.3 | 10.2 | 10.2 | 9.8 |
| IPLV | 15.0 | 15.4 | 15.7 | 15.9 | 15.5 | 15.6 |
| **GENERAL UNIT DATA** | | | | | | |
| Length | 142.7 | 142.7 | 187.7 | 187.7 | 232.7 | 232.7 |
| Width | 88 | 88 | 88 | 88 | 88 | 88 |
| Height | 94.2 | 94.2 | 94.2 | 94.2 | 94.2 | 94.2 |
| Number Of Refrigerant Circuits | 2 | 2 | 2 | 2 | 2 | 2 |
| **REFRIGERANT CHARGE, OPERATING** | | | | | | |
| R-410A, CKT1/CKT2, LBS | 59/55 | 45/65 | 75/71 | 83/73 | 90/82 | 94/92 |
| Oil Charge, CKT1/CKT2, Gallons | 2.76/ 2.76 | 3.28/ 3.33 | 3.33/ 3.33 | 4.99/ 2.73 | 4.99/ 3.33 | 4.99/ 4.99 |
| Shipping Weight | 4718 | 4953 | 5869 | 6259 | 7344 | 7882 |
| Operating Weight | 4791 | 5026 | 5942 | 6369 | 7428 | 8001 |
| **COMPRESSORS, SCROLL TYPE** | | | | | | |
| Compressors Per Circuit | 2/2 | 3/2 | 2/2 | 3/3 | 3/2 | 3/3 |
| Compressors Per Unit | 4 | 5 | 4 | 6 | 5 | 6 |
| **NOMINAL TONS PER COMPRESSOR** | | | | | | |
| Circuit 1 | 15/32 | 15 | 32 | 32 | 32 | 32 |
| Circuit 2 | 15/32 | 32 | 32 | 15 | 32 | 32 |
| Condenser | | | | | | |
| Total Face Area $Ft^2$ | 160.3 | 160.3 | 213.8 | 213.8 | 267.2 | 267.2 |
| Number Of Rows | 1 | 1 | 1 | 1 | 1 | 1 |
| Fins Per Inch | 20 | 20 | 20 | 20 | 20 | 20 |
| **CONDENSER FANS, LOW SOUND** | | | | | | |
| Number Of Fans, CKT 1/CKT 2 | 3/3 | 4/2 | 4/4 | 5/3 | 6/4 | 5/5 |
| Fan HP | 2 | 2 | 2 | 2 | 2 | 2 |
| Fan RPM | 1160 | 1160 | 1160 | 1160 | 1160 | 1160 |
| Total Chiller CFM | 93600 | 93600 | 124800 | 124800 | 156000 | 156000 |
| **EVAPORATOR** | | | | | | |
| Water Volume, Gallons | 8.8 | 8.8 | 8.8 | 13.2 | 10.0 | 14.3 |
| Maximum Water Side Pressure, PSIG | 150 | 150 | 150 | 150 | 150 | 150 |
| Maximum Refrigerant Side Pressure, PSIG | 450 | 450 | 450 | 450 | 450 | 450 |
| Minimum Chiller Water Flow Rate, GPM | 100 | 100 | 100 | 150 | 150 | 150 |
| Maximum Chiller Water Flow Rate, GPM | 385 | 385 | 385 | 625 | 625 | 625 |
| Water Connections Size, Inches | 3 | 3 | 3 | 3 | 3 | 3 |

**NOTES:**
1. kW = Compressor Input Power.
2. EER = Chiller EER (includes power from compressors, fans, and the control panels 0.8 kW).
3. Rated in accordance with AHRI Standard 550/590 at an air on condenser temperature of 95°F and a leaving chilled water temperature of 44°F.
4. Additional rating information can be provided by your local Johnson Controls Sales Office.

# ELECTRICAL DATA

**TABLE 6** - MICROPANEL POWER SUPPLY

| UNIT VOLTAGE | UNIT VOLTAGE | CONTROL POWER | MCA NOTE A | OVER CURRENT PROTECTION, *SEE NOTE B* | | NF DISC SW |
|---|---|---|---|---|---|---|
| | | | | MIN | MAX | |
| MODELS W/O CONTROL TRANS | | 115-1-60/50 | 15A | 10A | 15A | 30 A / 240V |
| MODELS W/ CONTROL TRANS | -17 | 200-1-60 | 15A | 10A | 15A | 30 A / 240V |
| | -28 | 230-1-60 | 15A | 10A | 15A | 30 A / 240V |
| | -40 | 380-1-60 | 15A | 10A | 15A | 30 A / 480V |
| | -46 | 460-1-60 | 15A | 10A | 15A | 30 A / 480V |
| | -50 | 380/415-1-60 | 15A | 10A | 15A | 30A / 415V |
| | -58 | 575-1-60 | 15A | 10A | 15A | 30 A / 600V |

A. Minimum #14 AWG, 75 °C, Copper Recommended
B. Minimum and Maximum Over Current Protection, Dual Element Fuse or Circuit Breaker

WARNING

***It is possible that multiple sources of power can be supplying the unit power panel. To prevent serious injury or death, the technician should verify that NO LETHAL VOLTAGES are present inside the panel AFTER disconnecting power, PRIOR to working on equipment.***

CAUTION

***The unit evaporator heater uses 120VAC. Disconnecting 120VAC power from the unit, at or below freezing temperatures, can result in damage to the evaporator and unit as a result of the chilled liquid freezing.***

### Voltage Limitations

The following voltage limitations are absolute and operation beyond these limitations may cause serious damage to the compressor.

**TABLE 7** - VOLTAGE RANGE

| VOLTAGE RANGE | | | |
|---|---|---|---|
| VOLTAGE CODE | UNIT POWER | MIN. | MAX. |
| -17 | 200-208/3/60 | 180 | 220 |
| -28 | 230-3-60 | 207 | 253 |
| -40 | 380-3-60 | 342 | 440 |
| -46 | 460-3-60 | 414 | 506 |
| -50 | 380/415-3-50 | 342 | 440 |
| -58 | 575-3-60 | 517 | 633 |

## COMPRESSOR HEATERS

Compressor heaters are standard. ZP180 compressors utilize 70W heaters; ZP235, compressor use 120W heaters and ZP285 and ZP385 utilize 150W heaters. If power is OFF more than two hours, the crankcase heaters must be energized for 18 – 24 hours prior to restarting a compressor. This will assure that liquid slugging and oil dilution does not damage the compressors on start.

## CLEARANCES

See *Figure 22* below for minimum clearances for all YLAA units.

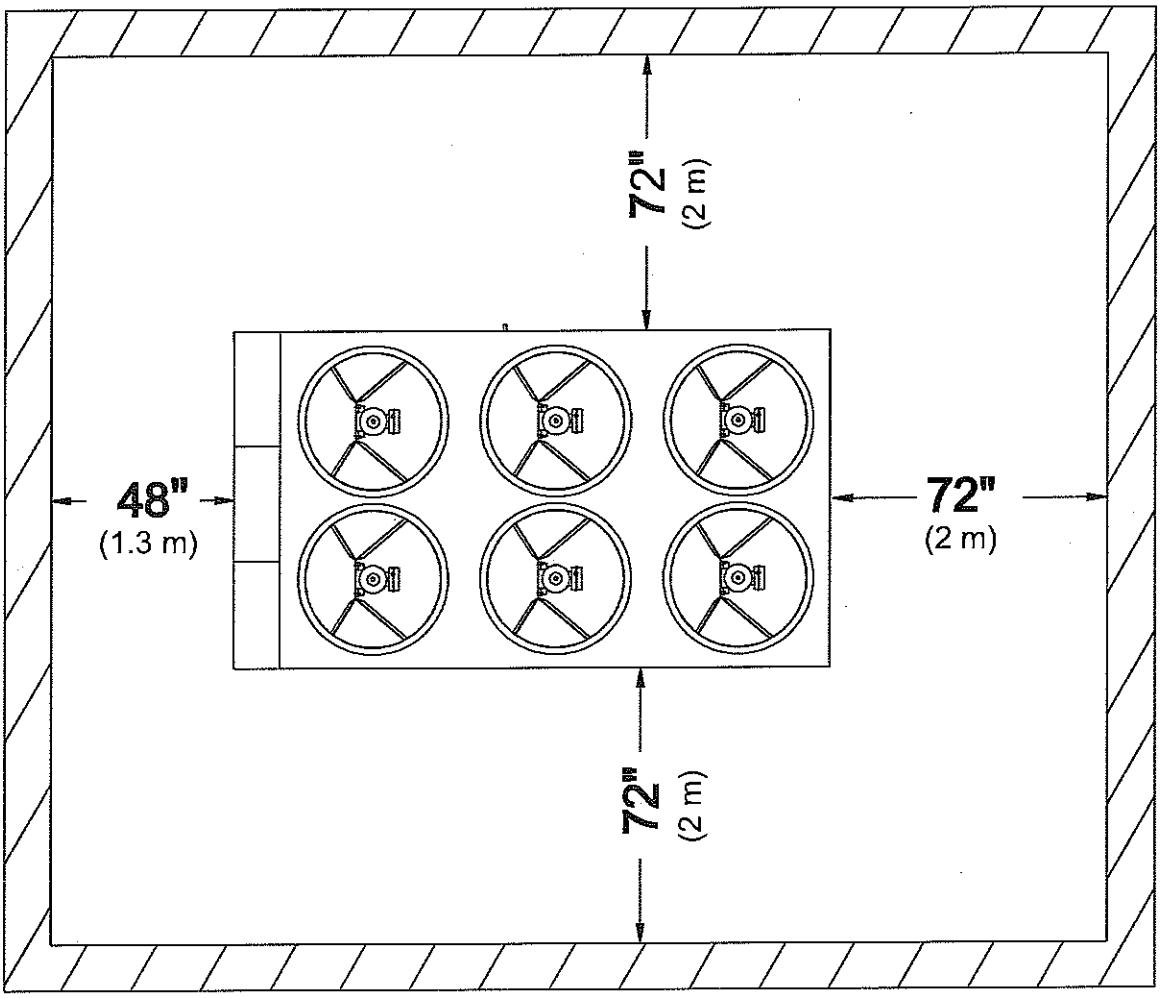


**NOTES:**

1. No obstructions allowed above the unit.
2. Only one adjacent wall may be higher than the unit.
3. Adjacent units should be 10 feet (3 Meters) apart.

**FIGURE 22 -** UNIT CLEARANCES – ALL MODELS

# 2" DEFLECTION ISOLATOR CROSS-REFERENCE

## Y2RS

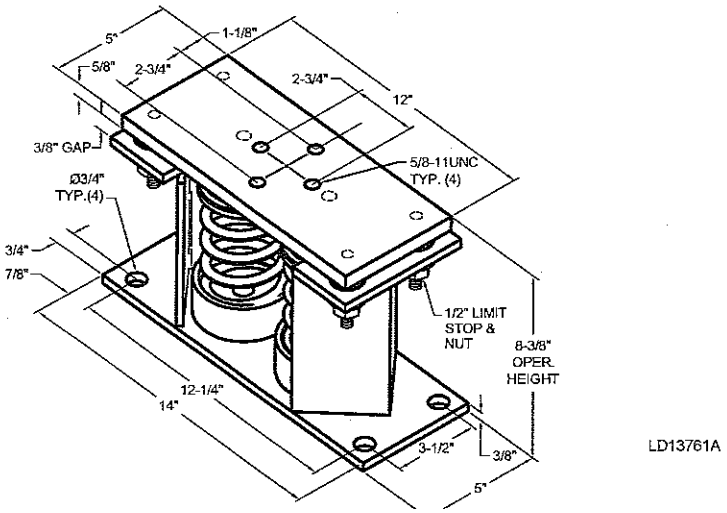


1. All dimensions are in inches, interpret per ANSI Y14.
2. Standard finish: housing-powder coated (color, black), spring-powder coated (color, see table below) hardware - zinc-electroplate.
3. Equipment must be bolted or welded to the top plate to meet allowable seismic ratings.
4. All springs are designed for 50% overload capacity with exception of the 2D-3280N and 2D-2870.
5. *Refer to next page for installation instructions.*
6. Consult factory for concrete installation.

5

**MODEL Y2RSI-2D SEISMICALLY RESTRAINED VIBRATION ISOLATOR FOR 2" DEFLECTION**

| SEISMIC MOUNT SIZE | RATED LOAD (LBS) | RATED DEFLECTION (IN) | SPRING RATE (LBS/IN) | SOLID LOAD (LBS) | COLOR CODE | ALLOWABLE G RATING HORIZONTAL |
|---|---|---|---|---|---|---|
| Y2RSI-2D-150 | 150 | 2.4 | 62 | 234 | WHITE | 34.7 |
| Y2RSI-2D-320 | 320 | 2.3 | 140 | 490 | YELLOW | 16.3 |
| Y2RSI-2D-460 | 460 | 2.3 | 200 | 688 | GREEN | 11.3 |
| Y2RSI-2D-710 | 710 | 2.2 | 330 | 1072 | DK BROWN | 7.3 |
| Y2RSI-2D-870 | 870 | 1.9 | 460 | 1312 | RED | 6 |
| Y2RSI-2D-1200N | 1200 | 1.9 | 638 | 1818 | RED/BLACK | 4.3 |
| Y2RSI-2D-1450 | 1450 | 1.8 | 900 | 2450 | TAN | 3.6 |
| Y2RSI-2D-1690 | 1690 | 1.7 | 1140 | 2892 | PINK | 3.1 |
| Y2RSI-2D-2000N | 2000 | 1.7 | 1318 | 3342 | PINK/BLACK | 2.6 |
| Y2RSI-2D-2640N | 2640 | 1.5 | 1854 | 4283 | PINK/GRAY | 2 |
| Y2RSI-2D-2870N | 3080 | 1.5 | 2004 | 4629 | PINK/GRAY/ ORANGE | 1.7 |
| Y2RSI-2D-3280N | 3740 | 1.8 | 2134 | 4930 | PINK/GRAY/DK BROWN | 1.4 |

# 2" DEFLECTION ISOLATOR INSTALLATION AND ADJUSTMENT

1. Read instructions in their entirety before beginning installation.
2. Isolators are shipped fully assembled and are to be positioned in accordance with the submittal drawings or as otherwise recommended.
3. Set isolators on floor, housekeeping pad, or subbase, ensuring that all isolator centerlines match the equipment mounting holes. The VMC group recommends that the isolator base plates ("B") be installed on a level surface. Shim or grout as required, leveling all isolator base plates to the same elevation (1/4-inch maximum difference can be tolerated).
4. Bolt or anchor all isolators to supporting structure utilizing base plate thru holes ("C") or weld base plate to supporting structure with 3/8 fillet weld 2" long @ 4" on center around entire base plate or as engineered for specific load and or field conditions.
5. Isolators are shipped to the job site with (2) removable spacer shims ("E") between the top plate and the housing. These shims must be in place when the equipment is positioned over the isolators.
6. With all shims ("E") in place, position equipment on top of plate ("A") of isolator. Bolt equipment securely to top plate of isolator using a minimum of (2) 5/8 UNC A325 grade 5 SAE bolts or weld equipment or bracket to the top plate ("A") of isolator with a minimum of 3/8 fillet welds 2" long @ 3" on center for a minimum total weld of 10". (All sides of equipment or bracket resting on top plate ("A") must be welded).
7. The adjustment process can only begin after the equipment or machine is at its full operating weight.
8. Back off each of the (4) limit stop lock nuts ("F") on isolators 1/2".
9. Adjust each isolator in sequence by turning spring adjusting nuts ("G") one full clockwise turn at a time. Repeat this procedure on all isolators, one at a time. Check the limit stop lock nuts ("F") periodically to ensure that clearance between the washer and rubber grommet is maintained. Stop adjustment of isolator only when the top plate ("A") has risen just above the shim ("E").
10. Remove all spacer shims ("E").
11. Fine adjust isolators to level equipment.
12. Adjust all limit stop lock nuts ("F") per isolator, maintaining a 1/4 to 3/8-inch gap. The limit stop nuts must be kept at this gap to ensure uniform bolt loading during uplift (as the case when equipment is drained).
13. Installation is complete.

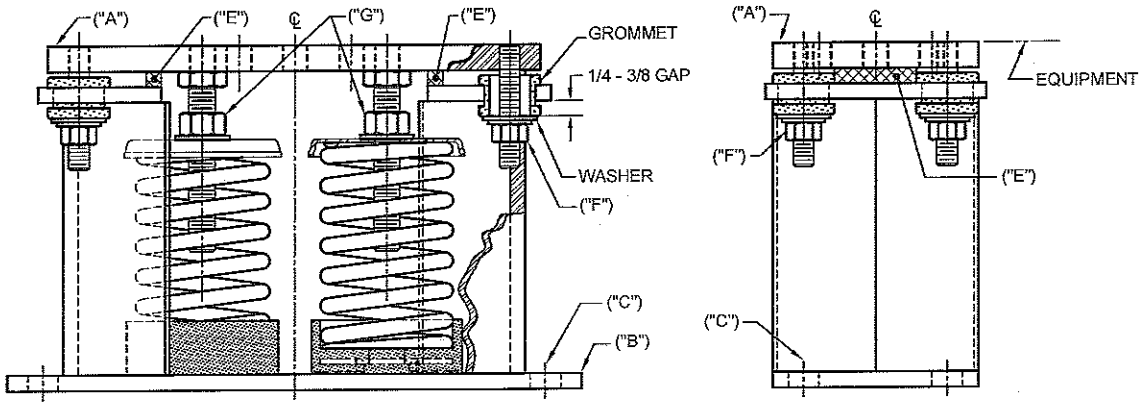


LD13763B

## BACNET, MODBUS, N2 AND YORKTALK 2 COMMUNICATIONS

Data can be read and in some cases modified using a serial communication BACnet, Modbus or YorkTalk 2 network connection. This information allows communications of chiller operating parameters and external control changes to setpoint, load limiting, and start/stop commands.

BACnet and YorkTalk 2 RS485 networks are wired to the + and - terminals of TB1 for port 1 communications. Modbus network connection has the option of RS232 or RS485 connection for port 2 communications. Modbus network is wired to either TB2 or TB3 as follows:

- RS-485: connect to TB2 - Network (-1) to TB2 (-1); Network (+1) to TB2 (+1)
- RS-232: connect to TB3 - Network (RX) to TB3 (TXD); Network (TX) to TB3 (RXD); Network (GND) to TB3 (GND)

*Refer to Figure 27 on page 130 for TB1, TB2 and TB3 locations.*

In most cases, communication parameters will need to be modified. Table 30 on page 131 lists setup parameters for the available protocols. Modification is accomplished by pressing the PROGRAM, DOWN ARROW, DOWN ARROW, DOWN ARROW, DOWN ARROW, and ENTER keys in sequence. The list below shows the displays for the values that may be modified:

```
DE MODIFIER ADDRESS
                XXXXX

DE MODIFIER OFFSET
                   XX

P1 PROTOCOL
             XXXXXX

P1 MANUAL MAC
ADDRESS        XXX

P1 BAUD RATE
             XXXXX

P1 PARITY
             XXXXX

P1 STOP BITS
                  X
```

```
P2 PROTOCOL
          XXXXXXXXXX

P2 MANUAL MAC
ADDRESS        XXX

P2 BAUD RATE
             XXXXX

P2 PARITY
             XXXXX

P2 STOP BITS
                  X

P2 HW SELECT BIT
             XXXXX

REAL TIME ERROR    ##
RESET 1 = YES, 0 = NO  0
```

Note: *See Table 16 on page 132 for error descriptions*

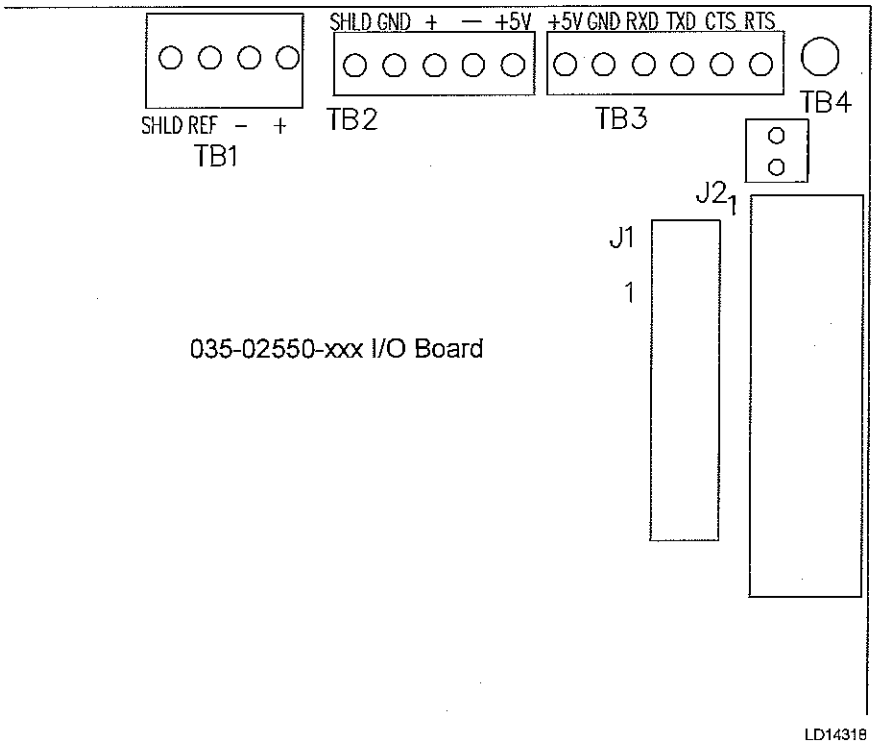


**FIGURE 27** - MICRO PANEL CONNECTIONS

The table below shows the minimum, maximum, and default values.

**TABLE 14** - MINIMUM, MAXIMUM AND DEFAULT VALUES

| DESCRIPTION | MINIMUM | MAXIMUM | DEFAULT |
|---|---|---|---|
| DE MODIFIER ADDRESS | -1 | 41943 | -1 |
| DE MODIFIER OFFSET | -1 | 99 | -1 |
| P1 BAUD RATE | 1200 | 76800 | 4800 |
| | 1200, 4800, 9600, 19200, 38400, 76800, AUTO SELECTABLE | | |
| P2 BAUD RATE | 1200 | 57600 | 1200 |
| | 1200, 4800, 9600, 19200, 38400, 57600 SELECTABLE | | |
| P1, P2 MANUAL Mac ADDRESS | -1 | 127 | -1 |
| P1, P2 PARITY | NONE | IGNORE | NONE |
| | NONE, EVEN, ODD, IGNORE SELECTABLE | | |
| P1 PROTOCOL | BACNET | API | BACNET |
| | BACNET, API SELECTABLE | | |
| P2 PROTOCOL | TERMINAL | MODBUS CLIENT | API |
| | TERMINAL, MODBUS IO, MODBUS SERVER, API, MODBUS CLIENT SELECTABLE | | |
| P1, P2 STOP BITS | 1 | 2 | 1 |
| RESET REAL TIME ERROR | NO | YES | NO |

The table below shows set-up requirements for each communication protocol.

**TABLE 15 -** VALUES REQUIRED FOR BAS COMMUNICATION

| SETTING DESCRIPTION | PROTOCOL | | | |
|---|---|---|---|---|
| | BACNET MS/TP | MODBUS RTU[5] | YORKTALK 2 | N2[6] |
| DE MODIFIER ADDRESS | 0 to 41943[3] | 1 | -1 | 0 to 41943[3] |
| DE MODIFIER OFFSET | 0 to 99[4] | 0 | N/A | 0 to 99[4] |
| P1 PROTOCOL | BACNET | N/A | N/A | 9n2 |
| P1 MANUAL MAC ADDRESS | 0-127[1] | N/A | N/A | 0-127[1] |
| P1 BAUD RATE | 9600 To 76800 or Auto Selectable[1] | N/A | N/A | 9600 |
| P1 PARITY | NONE | N/A | N/A | NONE |
| P1 STOP BITS | 1 | N/A | N/A | 1 |
| P2 PROTOCOL | N/A | MODBUS SVR | N/A | N/A |
| P2 MANUAL MAC ADDRESS | N/A | 0-127[1] | N/A | N/A |
| P2 BAUD RATE | N/A | 19,200[2] | N/A | N/A |
| P2 PARITY | N/A | NONE[2] | N/A | N/A |
| P2 STOP BITS | N/A | 1 | N/A | N/A |
| P2 HW SELECT BIT | N/A | RS-485 or RS-232[1] | N/A | N/A |
| RESET REAL TIME ERROR | N/A | N/A | N/A | N/A |
| P1 HW SELECT BIT | N/A | N/A | N/A | N/A |
| CHILLER ID | N/A | N/A | 0 | N/A |

1. As required by network. 2. Or other as required by network. 3. Number is multiplied by 100, set as required by network.
4. Number is added to de modifier address, set as required by network.
5. Unit operating software version C.Mmc.13.03 or later required for Modbus Protocol.
6. Unit operating software version 04 (C.MMC.13.04, C.MMC.14.04, or C.MMC.16.04) or higher required for N2 protocol functionality.



## BACnet and Modbus Communications

Chiller data that can be read and modified using specific BACnet or Modbus Register Addresses; and the data associated with the addresses, is outlined in the following description:

### *Analog Write Points*

This data can be read and modified using a BACnet or Modbus network connection. The Modbus Register Address for these points is 1025 + AV #.

### *Binary Write Points*

This data can be read and modified using a BACnet or Modbus network connection. The Modbus Register Address for these points is 1537 + BV #.

### *Analog Read Only Points*

This data can be read using a BACnet or Modbus network connection and can NOT be modified using this connection. The Modbus Register Address for these points is 513 + AI #.

### *Binary Monitor Only Points*

This data can be read using a BACnet or Modbus network connection and can NOT be modified using this connection. The Modbus Register Address for these points is 1281 + BI #.

*Refer to Table 17 on page 133 for complete list of BACnet and Modbus registers.*

NOTE

***The latest data map information is listed on the Johnson Controls Equipment Integration website.***

## Communications Data Map Notes

*(See Table 17)*

1. IPU II based units are configured for Native BACnet MS/TP and Modbus RTU communications. E-Link Gateway not required for these two communication protocols.
2. BACnet Object Types:

   0 = Analog In
   1 = Analog Out
   2 = Analog Value
   3 = Binary In
   4 = Binary Output
   5 = Binary Value
   8 = Device
   15 = Alarm Notification (0 through 127 are reserved ASHRAE Objects).

3. 

   WC= Inches of water column
   CFM = Cubic Feet per Minute
   FPM = Feet per Minute
   PSI = Lbs per square inch
   Pa = Pascals
   kPa = Kilopascals
   PPM = Part per Million
   kJ/kg = Kilojoules per Kilogram.

4. Water Cooled Scroll units use the same firmware as Air Cooled Scroll units, ignoring Fan Control.

The table below shows the real time error numbers that may be encountered during communication setup and a description of each.

**TABLE 16 -** REAL TIME ERROR NUMBERS

| ERROR NUMBER (##) | DESCRIPTION |
|---|---|
| 0 | ALL OK |
| 1 | DATUM TYPE OK TEST FAILED |
| 2 | ENGLISH TEXT TOO LONG |
| 3 | FLOATING POINT EXCEPTION |
| 4 | GET PACKET FAILED |
| 5 | GET TYPE FAILED |
| 6 | INVALID UNIT CONVERSION |
| 7 | INVALID HARDWARE SELECTION |
| 8 | REAL TIME FAULT |
| 9 | SPANISH TEXT TOO LONG |
| 10 | THREAD EXITED |
| 11 | THREAD FAILED |
| 12 | THREAD STALLED |
| 13 | IO BOARD RESET |
| 14 | BRAM INVALID |
| 15 | BACNET SETUP FAILED |

NOTE

***Reboot required (cycle power) after settings are changed.***

# TABLE 17 - BACNET AND MODBUS COMMUNICATIONS DATA MAP



## YCAL/YCUL/YCWL/YLAA/YLUA IPU II

**Native** Modbus, BACnet MS/TP, N2 Data Maps

Board: 031-02630-xxx w/ 031-02550

| ITEM | Version | Date | York PN | | CK Sum | Comments |
|---|---|---|---|---|---|---|
| 1 | C.MMC.16.00 | 29-Nov-06 | 031-02755-004 | | | Basildon MMHP with Board: 031-02630-xxx w/ 031-02550 |
| 2 | C.MMC.13.02 | 17-Oct-08 | 031-02755-001 | | | Standard Micro Board 031-02550-xxx . Fix native Modbus communications. Fix Café Metric functionality (SCR-766) |
| 3 | C.MMC.14.02 | 17-Oct-08 | 031-02755-003 | | | MMHP with Board: 031-02630-xxx w/ 031-02550Fix native Modbus communications. Fix Café Metric functionality (SCR-766) |
| 4 | C.MMC.16.02 | 17-Oct-08 | 031-02755-004 | | | Basildon MMHP with Board: 031-02630-xxx w/ 031-02550 Fix native Modbus communications. Fix Café Metric functionality (SC |
| 5 | C.MMC.13.03 | 3-Mar-09 | 031-02755-001 | | | Add AI 54, 55, 56, 57 |
| 6 | C.MMC.14.03 | 3-Mar-09 | 031-02755-003 | | | Add AI 54, 55, 56, 57 |
| 7 | C.MMC.16.03 | 3-Mar-09 | 031-02755-004 | | | Add AI 54, 55, 56, 57 |
| 8 | | | | | | |
| 9 | | | | | | |
| 10 | | | | | | |

| ITEM REF NUM | BACnet NAME | BACnet Object/Instance | MODBUS ADDRESS | MODBUS Data Type Supported | MODBUS Scaling | N2 Metasys | ENG UNITS | READ WRITE | POINT DESCRIPTION | Point List Code S=Standard; O = Optional; N = Not Available 1 | 2 | 3 | 4 | 5 | 6 | 7 | 8 | 9 | 10 |
|---|---|---|---|---|---|---|---|---|---|---|---|---|---|---|---|---|---|---|---|
| 1 | | | | | SEE NOTE 7 | | SEE NOTE 6 | | SEE NOTE 1 | | | | | | | | | | |
| 3 | ANALOG WRITE POINTS | | | | | | | | | | | | | | | | | | |
| 4 | REM_SETP | AV_1 | 1026 | 03,06,16 | div10 | ADF 1 | F° | R/W | Setpoint Cooling Setpoint(HP Only), 99 = Auto; (40°F - 70°F) | S | S | S | S | S | S | S | | | |
| 5 | SP_REM_SP_S1 | AV_2 | 1027 | 03,06,16 | div10 | ADF 2 | PSIG | R/W | Sys 1 Setpoint (Suction Pressure Control units only) | S | S | S | S | S | S | S | | | |
| 6 | LOAD_LIMIT | AV_3 | 1028 | 03,06,16 | n/a | ADF 3 | index | R/W | Load Limit Stage (0, 1, 2) ( see note 2 below) | S | S | S | S | S | S | S | | | |
| 7 | REM_CR | AV_4 | 1029 | 03,06,16 | div10 | ADF 4 | F° | R/W | Cooling Range (DAT Mode Only) | S | S | S | S | S | S | S | | | |
| 8 | SP_REM_SP_S2 | AV_5 | 1030 | 03,06,16 | div10 | ADF 5 | PSIG | R/W | Sys 2 Setpoint (Suction Pressure Control) | S | S | S | S | S | S | S | | | |
| 9 | REM_SP_HEAT | AV_6 | 1031 | 03,06,16 | div10 | ADF 6 | F° | R/W | Heating Setpoint (HP Only), 999 = Auto (95°F - 122°F) | S | S | S | S | S | S | S | | | |
| 10 | HP_MODE | AV_7 | 1032 | 03,06,16 | n/a | ADF 7 | index | R/W | Mode (HP Only) (0=Panel, 1=Cooling, 2=Heating) | S | S | S | S | S | S | S | | | |
| 11 | | | | | | | | | | S | S | S | S | S | S | S | | | |
| 12 | BINARY WRITE POINTS | | | | | | | | | | | | | | | | | | |
| 13 | START_STOP | BV_1 | 1538 | 01,03,05,15,06, | n/a | BD 1 | 0, 1 | R/W | Stop Start Command | S | S | S | S | S | S | S | | | |
| 14 | SS_SYS1 | BV_2 | 1539 | 01,03,05,15,06, | n/a | BD 2 | 0, 1 | R/W | Sys 1 Start/Stop ( Suction Pressure (SP) Control Only) | S | S | S | S | S | S | S | | | |
| 15 | SS_SYS2 | BV_3 | 1540 | 01,03,05,15,06, | n/a | BD 3 | 0, 1 | R/W | Sys 2 Start/Stop ( Suction Pressure (SP) Control Only) | S | S | S | S | S | S | S | | | |
| 16 | ANALOG READ ONLY POINTS | | | | | | | | | | | | | | | | | | |
| 17 | LCHLT | AI_1 | 514 | 03,04 | X10 | ADF 8 | F° | R | Leaving Chilled Liquid Temp | S | S | S | S | S | S | S | | | |
| 18 | RCHLT | AI_2 | 515 | 03,04 | X10 | ADF 9 | F° | R | Return Chilled Liquid Temp | S | S | S | S | S | S | S | | | |
| 19 | DAT | AI_3 | 516 | 03,04 | X10 | ADF 10 | F° | R | Disch Air Temp ( Condensing Units Only | S | S | S | S | S | S | S | | | |
| 20 | S1_SUCT_TEMP | AI_4 | 517 | 03,04 | X10 | ADF 11 | F° | R | Sys 1 Suction Temp (EEV & Cond Units Only) | S | S | S | S | S | S | S | | | |
| 21 | OAT | AI_5 | 518 | 03,04 | X10 | ADF 12 | F° | R | Ambient Air Temperature | S | S | S | S | S | S | S | | | |
| 22 | S1_SUCT_SHEAT | AI_6 | 519 | 03,04 | X10 | ADF 13 | F° | R | Sys 1 Suction Superheat ( EEV Models Only) | S | S | S | S | S | S | S | | | |
| 23 | S1_RUN_TIME | AI_7 | 520 | 03,04 | X10 | ADF 14 | seconds | R | Sys 1 Run Time (seconds) | S | S | S | S | S | S | S | | | |
| 24 | S1_SUCT_PR | AI_8 | 521 | 03,04 | X10 | ADF 15 | PSIG | R | Sys 1 Suction Pressure | S | S | S | S | S | S | S | | | |
| 25 | S1_DSCH_PR | AI_9 | 522 | 03,04 | X10 | ADF 16 | PSIG | R | Sys 1 Discharge Pressure | S | S | S | S | S | S | S | | | |
| 27 | S1_CIR_TEMP | AI_10 | 523 | 03,04 | X10 | ADF 17 | F° | R | Sys 1 Cooler Inlet Refrigerant Temp (R-407c Models Only) | S | S | S | S | S | S | S | | | |
| 28 | S1_DEF_TEMP | AI_11 | 524 | 03,04 | X10 | ADF 18 | F° | R | Sys 1 Defrost Temperature (HP Only) | S | S | S | S | S | S | S | | | |
| 29 | S1_EEV_OUT | AI_12 | 525 | 03,04 | X10 | ADF 19 | F° | R | System 1 EEV Output % ( EEV Models Only) | S | S | S | S | S | S | S | | | |
| 30 | S1_AR_TIMER | AI_13 | 526 | 03,04 | X10 | ADF 20 | seconds | R | Sys 1 Anti-Recycle Timer | S | S | S | S | S | S | S | | | |
| 31 | AC_TIMER | AI_14 | 527 | 03,04 | X10 | ADF 21 | seconds | R | Anti-Coincident Timer | S | S | S | S | S | S | S | | | |
| 32 | S2_SUCT_TEMP | AI_15 | 528 | 03,04 | X10 | ADF 22 | °F | R | System 2 Suction Temp ( EEVModels Only) | S | S | S | S | S | S | S | | | |
| 33 | S2_RUN_TIME | AI_16 | 529 | 03,04 | X10 | ADF 23 | seconds | R | Sys 2 Run Time (seconds) | S | S | S | S | S | S | S | | | |
| 34 | S2_SUCT_PR | AI_17 | 530 | 03,04 | X10* | ADF 24 | PSIG | R | Sys 2 Suction Pressure | S | S | S | S | S | S | S | | | |
| 35 | S2_DSCH_PR | AI_18 | 531 | 03,04 | X10 | ADF 25 | PSIG | R | Sys 2 Discharge Pressure | S | S | S | S | S | S | S | | | |
| 36 | S2_CIR_TEMP | AI_19 | 532 | 03,04 | X10 | ADF 26 | F° | R | Sys 2 Cooler Inlet Refrigerant Temperature(R-407c Only) | S | S | S | S | S | S | S | | | |
| 37 | S2_DEF_TEMP | AI_20 | 533 | 03,04 | X10 | ADF 27 | F° | R | Sys 2 Defrost Temperature (HP Only) | S | S | S | S | S | S | S | | | |
| 38 | S2_SUCT_SH | AI_21 | 534 | 03,04 | X10 | ADF 28 | F° | R | Sys 2 Suction SuperHeat (EEV Models Only) | S | S | S | S | S | S | S | | | |
| 39 | S2_AR_TIMER | AI_22 | 535 | 03,04 | X10 | ADF 29 | F° | R | Sys 2 Anti-Recycle Timer | S | S | S | S | S | S | S | | | |
| 40 | S2_EEV_OUT | AI_23 | 536 | 03,04 | X10 | ADF 30 | seconds | R | Sys 2 Suction Superheat ( EEV Models Only) | S | S | S | S | S | S | S | | | |

# TABLE 17 - BACNET AND MODBUS COMMUNICATIONS DATA MAP (CONT'D)

| ITEM REF NUM | BACnet NAME | BACnet Object/Instance | MODBUS ADDRESS | MODBUS Data Type Supported | MODBUS Scaling | N2 Metasys | ENG UNITS | READ WRITE | POINT DESCRIPTION | Point List Code S=Standard; O = Optional; N = Not Available 1 | 2 | 3 | 4 | 5 | 6 | 7 | 8 | 9 | 10 |
|---|---|---|---|---|---|---|---|---|---|---|---|---|---|---|---|---|---|---|---|
| 41 | NUM_COMPS | AI_24 | 537 | 03,04 | X1 | ADF 31 | count | R | Number of Compressors | S | S | S | S | S | S | S | | | |
| 42 | S1_OP_CODE | AI_25 | 538 | 03,04 | X1 | ADF 32 | index | R | Sys 1 Operational Code (Definition in Table A) | S | S | S | S | S | S | S | | | |
| 43 | S1_FLT_CODE | AI_26 | 539 | 03,04 | X1 | ADF 33 | index | R | Sys 1 Fault Code (Definition in Table B) | S | S | S | S | S | S | S | | | |
| 44 | S2_OP_CODE | AI_27 | 540 | 03,04 | X1 | ADF 34 | index | R | Sys 2 Operational Code (Definition in Table A) | S | S | S | S | S | S | S | | | |
| 45 | S2_FLT_CODE | AI_28 | 541 | 03,04 | X1 | ADF 35 | index | R | Sys 2 Fault Code (Definition in Table B) | S | S | S | S | S | S | S | | | |
| 46 | S1_DBG_CODE | AI_29 | 542 | 03,04 | X1 | ADF 36 | index | R | Sys 1 Debug Code | S | S | S | S | S | S | S | | | |
| 47 | S1_FAN_STAGE | AI_30 | 543 | 03,04 | X1 | ADF 37 | count | R | Sys 1 Condenser Fan Stage | S | S | S | S | S | S | S | | | |
| 48 | S2_DBG_CODE | AI_31 | 544 | 03,04 | X1 | ADF 38 | index | R | Sys 2 Debug Code | S | S | S | S | S | S | S | | | |
| 49 | S2_FAN_STAGE | AI_32 | 545 | 03,04 | X1 | ADF 39 | count | R | Sys 2 Condenser Fan Stage | S | S | S | S | S | S | S | | | |
| 50 | CONTROL_MODE | AI_33 | 546 | 03,04 | X1 | ADF 40 | count | R | Unit Control Mode (0=Leaving Water, 1=Return Water, 2=Discharge Air, 3=Suction Press, 4=Cooling, 5=Heating) | S | S | S | S | S | S | S | | | |
| 51 | AR_TIME | AI_34 | 547 | 03,04 | X10 | ADF 41 | seconds | R | Anti-Recycle Time (Programmed) | S | S | S | S | S | S | S | | | |
| 52 | LCHLT_CUT | AI_35 | 548 | 03,04 | X10 | ADF 42 | F° | R | Leaving Chilled Liquid Temp Cutout | S | S | S | S | S | S | S | | | |
| 53 | LOW_AMB_CUT | AI_36 | 549 | 03,04 | X10 | ADF 43 | F° | R | Low Ambient Temperature Cutout | S | S | S | S | S | S | S | | | |
| 54 | SUCT_P_CO_HT | AI_37 | 550 | 03,04 | X10 | ADF 44 | PSIG | R | Low Suction Pressure Cutout Heating (HP Only) | S | S | S | S | S | S | S | | | |
| 55 | L_SUCT_P_CO | AI_38 | 551 | 03,04 | X10* | ADF 45 | PSIG | R | Low Suction Pressure Cutout (Cooling on HP units ) | S | S | S | S | S | S | S | | | |
| 56 | H_DSCH_P_CO | AI_39 | 552 | 03,04 | X10 | ADF 46 | PSIG | R | High Discharge Pressure Cutout | S | S | S | S | S | S | S | | | |
| 57 | COOL_SETP | AI_40 | 553 | 03,04 | X10 | ADF 47 | F° | R | Setpoint | S | S | S | S | S | S | S | | | |
| 58 | SP_SETP_S1 | AI_41 | 554 | 03,04 | X10 | ADF 48 | F° | R | Setpoint 1 (SP Control) | S | S | S | S | S | S | S | | | |
| 59 | CONTROL_RG | AI_42 | 555 | 03,04 | X10 | ADF 49 | F° | R | Cooling Range | S | S | S | S | S | S | S | | | |
| 60 | SP_CTL_RG_S1 | AI_43 | 556 | 03,04 | X10 | ADF 50 | F° | R | Cooling Range 1 (SP Control) | S | S | S | S | S | S | S | | | |
| 61 | SP_SETP_S2 | AI_44 | 557 | 03,04 | X10 | ADF 51 | F° | R | Setpoint 2 (SP Control) | S | S | S | S | S | S | S | | | |
| 62 | HEAT_SETP | AI_45 | 558 | 03,04 | X10 | ADF 52 | F° | R | Heating Setpoint (HP Only) | S | S | S | S | S | S | S | | | |
| 63 | SP_CTL_RG_S2 | AI_46 | 559 | 03,04 | X10 | ADF 53 | F° | R | Cooling Range 2 (SP Control) | S | S | S | S | S | S | S | | | |
| 64 | HEAT_RANGE | AI_47 | 560 | 03,04 | X10 | ADF 54 | F° | R | Heating Range (HP Only) | S | S | S | S | S | S | S | | | |
| 65 | S1_DSCH_TEMP | AI_48 | 561 | 03,04 | X10 | ADF 55 | F° | R | Sys 1 Discharge Temperature (EEV Only) | S | S | S | S | S | S | S | | | |
| 66 | S1_DSCH_SHEAT | AI_49 | 562 | 03,04 | X10 | ADF 56 | F° | R | Sys 1 Discharge Superheat (EEV Only) | S | S | S | S | S | S | S | | | |
| 67 | S2_DSCH_TEMP | AI_50 | 563 | 03,04 | X10 | ADF 57 | F° | R | Sys 2 Discharge Temperature (EEV Only) | S | S | S | S | S | S | S | | | |
| 68 | S2_DSCH_SH | AI_51 | 564 | 03,04 | X10 | ADF 58 | F° | R | Sys 2 Discharge Superheat (EEV Only) | S | S | S | S | S | S | S | | | |
| 69 | LEAVING_HOT | AI_52 | 565 | 03,04 | X10 | ADF 59 | F° | R | Leaving Liquid Hot Temp (R-410a) | S | S | S | S | S | S | S | | | |
| 70 | RETURN_HOT | AI_53 | 566 | 03,04 | X10 | ADF 60 | F° | R | Return Liquid Hot Temp (R-410a) | S | S | S | S | S | S | S | | | |
| 71 | R_COOL_SETP | AI_54 | 567 | 03,04 | X10 | ADF 61 | F° | R | Remote Setpoint | N | N | N | N | S | S | S | | | |
| 72 | R_SP_SETP_S1 | AI_55 | 568 | 03,04 | X10 | ADF 62 | F° | R | Remote Setpoint 1 (SP Control) | N | N | N | N | S | S | S | | | |
| 73 | R_SP_SETP_S2 | AI_56 | 569 | 03,04 | X10 | ADF 63 | F° | R | Remote Setpoint 2 (SP Control) | N | N | N | N | S | S | S | | | |
| 74 | R_HEAT_SETP | AI_57 | 570 | 03,04 | X10 | ADF 64 | F° | R | Remote Heating Setpoint (HP and YCWL HP) | N | N | N | N | S | S | S | | | |
| 75 | | | | | | | | | | | | | | | | | | | |
| 76 | BINARY MONITOR ONLY POINTS | | | | | | | | | | | | | | | | | | |
| 77 | S1_ALARM | BI_1 | 1282 | 01,02,03 | n/a | BD 4 | 0, 1 | R | Sys 1 Alarm | S | S | S | S | S | S | S | | | |
| 78 | S2_ALARM | BI_2 | 1283 | 01,02,03 | n/a | BD 5 | 0, 1 | R | Sys 2 Alarm | S | S | S | S | S | S | S | | | |
| 79 | EVAP_HTR | BI_3 | 1284 | 01,02,03 | n/a | BD 6 | 0, 1 | R | Evaporator Heater Status | S | S | S | S | S | S | S | | | |
| 80 | EVAP_PUMP | BI_4 | 1285 | 01,02,03 | n/a | BD 7 | 0, 1 | R | Evaporator Pump Status | S | S | S | S | S | S | S | | | |
| 81 | S1_C1_RUN | BI_5 | 1286 | 01,02,03 | n/a | BD 8 | 0, 1 | R | Sys 1 Comp 1 Run | S | S | S | S | S | S | S | | | |
| 82 | S2_C1_RUN | BI_6 | 1287 | 01,02,03 | n/a | BD 9 | 0, 1 | R | Sys 2 Comp 1 Run | S | S | S | S | S | S | S | | | |
| 83 | S1_LLSV | BI_7 | 1288 | 01,02,03 | n/a | BD 10 | 0, 1 | R | Sys 1 Liquid Line Solenoid Valve | S | S | S | S | S | S | S | | | |
| 84 | S1_MODE_SV | BI_8 | 1289 | 01,02,03 | n/a | BD 11 | 0, 1 | R | Sys 1 Mode Solenoid Valve (HP Only) | S | S | S | S | S | S | S | | | |
| 85 | S1_HGBV | BI_9 | 1290 | 01,02,03 | n/a | BD 12 | 0, 1 | R | Sys 1 Hot Gas Bypass Valve | S | S | S | S | S | S | S | | | |
| 86 | S1_BHS | BI_10 | 1291 | 01,02,03 | n/a | BD 13 | 0, 1 | R | Bivalent Heat Source (YLAE HP Only), Tray Heater (YLPA HP only) | S | S | S | S | S | S | S | | | |
| 87 | S1_C2_RUN | BI_11 | 1292 | 01,02,03 | n/a | BD 14 | 0, 1 | R | Sys 1 Comp 2 Run | S | S | S | S | S | S | S | | | |
| 88 | S2_C2_RUN | BI_12 | 1293 | 01,02,03 | n/a | BD 15 | 0, 1 | R | Sys 2 Comp 2 Run | S | S | S | S | S | S | S | | | |
| 89 | S2_LLSV | BI_13 | 1294 | 01,02,03 | n/a | BD 16 | 0, 1 | R | Sys 2 Liquid Line Solenoid Valve | S | S | S | S | S | S | S | | | |
| 90 | S2_MODE_SV | BI_14 | 1295 | 01,02,03 | n/a | BD 17 | 0, 1 | R | Sys 2 Mode Solenoid Valve (HP Only) | S | S | S | S | S | S | S | | | |

# TABLE 17 - BACNET AND MODBUS COMMUNICATIONS DATA MAP (CONT'D)



| ITEM REF NUM | BACnet NAME | BACnet Object/Instance | MODBUS ADDRESS | MODBUS Data Type Supported | MODBUS Scaling | N2 Metasys | ENG UNITS | READ WRITE | POINT DESCRIPTION | Point List Code S=Standard; O = Optional; N = Not Available | | | | | | | | | |
|---|---|---|---|---|---|---|---|---|---|---|---|---|---|---|---|---|---|---|---|
| | | | | | | | | | | 1 | 2 | 3 | 4 | 5 | 6 | 7 | 8 | 9 | 10 |
| 91 | LEAD_SYS | BI_15 | 1296 | 01,02,03 | n/a | BD 18 | 0, 1 | R | Lead System (0 = Sys 1, 1 = Sys 2) | S | S | S | S | S | S | S | | | |
| 92 | S1_C3_RUN | BI_16 | 1297 | 01,02,03 | n/a | BD 19 | 0, 1 | R | Sys 1 Comp 3 Run | S | S | S | S | S | S | S | | | |
| 93 | S2_C3_RUN | BI_17 | 1298 | 01,02,03 | n/a | BD 20 | 0, 1 | R | Sys 2 Comp 3 Run | S | S | S | S | S | S | S | | | |
| 94 | CH_LIQ_TYPE | BI_18 | 1299 | 01,02,03 | n/a | BD 21 | 0, 1 | R | Chilled Liquid Type (0=Water, 1=Glycol) | S | S | S | S | S | S | S | | | |
| 93 | AMB_MODE | BI_19 | 1300 | 01,02,03 | n/a | BD 22 | 0, 1 | R | Ambient Control Mode (0=Std Amb, 1=Low Amb) | S | S | S | S | S | S | S | | | |
| 94 | CNTL_MODE | BI_20 | 1301 | 01,02,03 | n/a | BD 23 | 0, 1 | R | Local/Remote Control Mode (0=Local, 1=Remote) | S | S | S | S | S | S | S | | | |
| 95 | DATA_UNIT | BI_21 | 1302 | 01,02,03 | n/a | BD 24 | 0, 1 | R | Units (0=Imperial, 1=SI) | S | S | S | S | S | S | S | | | |
| 96 | AUTO_LL | BI_22 | 1303 | 01,02,03 | n/a | BD 25 | 0, 1 | R | Lead/Lag Control Mode (0=Manual, 1=Auto) | S | S | S | S | S | S | S | | | |
| 97 | S2_HGBV | BI_23 | 1304 | 01,02,03 | n/a | BD 26 | 0, 1 | R | Sys 2 HotGas Bypass Valve | N | N | N | N | N | N | N | | | |

**TABLE A**

| Code | Operational Codes |
|---|---|
| 0 | No Abnormal Condition |
| 1 | Unit Switch Off |
| 2 | System Switch Off |
| 3 | Lock-Out |
| 4 | Unit Fault |
| 5 | System Fault |
| 6 | Remote Shutdown |
| 7 | Daily Schedule Shutdown |
| 8 | No Run Permissive |
| 9 | No Cool Load |
| 10 | Anti-Coincidence Timer Active |
| 11 | Anti-Recycle Timer Active |
| 12 | Manual Override |
| 13 | Suction Limiting |
| 14 | Discharge Limiting |
| 15 | Current limiting |
| 16 | Load Limiting |
| 17 | Compressor(s) Running |
| 18 | Heat Pump Load Limiting |
| 19 | |
| 20 | |

**TABLE B**

| Code | Fault Codes | Code | Fault Codes |
|---|---|---|---|
| 0 | No Fault | 21 | Power Failure, Manual Reset Required |
| 1 | VAC Under Voltage | 22 | Unit Motor Current |
| 2 | Low Ambient Temperature | 23 | Low Superheat |
| 3 | High Ambient Temperature | 24 | Sensor Fault |
| 4 | Low Leaving Chilled Liquid Temp | 25 | Discharge Inhibit |
| 5 | High Discharge Pressure | 26 | MP/HPCO Inhibit |
| 6 | High Differential Oil Pressure | 27 | Pump Trip |
| 7 | Low Suction Pressure | 28 | Pump Fail Make Flow |
| 8 | High Motor Current | 29 | High Ambient Temperature |
| 9 | LLSV Not On | 30 | |
| 10 | Low Battery Warning | 31 | |
| 11 | High Oil Temperature | 32 | |
| 12 | High Discharge Temperature | 33 | |
| 13 | Improper Phase Rotation | 34 | |
| 14 | Low Motor Current / MP / HPCO | 35 | |
| 15 | Motor Current Unbalanced | 36 | |
| 16 | Low Differential Oil Pressure | 37 | |
| 17 | Ground Fault | 38 | |
| 18 | MP/HPCO Fault | 39 | |
| 19 | Low Evaporator Temperature | 40 | |
| 20 | Incorrect Refrigerant Programmed | 41 | |

***Note***

**Shaded Codes** may not be available on all models. Please check the Fault and Operational codes against the codes published in your operators manual or confirm Code is available through the display of your unit. If the Code appears in the display, you will recieve that value through the BAS.

**NOTES**

| | |
|---|---|
| 1 | IPU II ( PN 031-02550-xxx ) based equipment are configured for Native BACnet MS/TP and Modbus RTU communications. The Microgateway product is not required for these 2 interfaces |
| 2 | Load Limit Stage 0 = 100% full run ( all compressors ) , 1 = 50% Run ( 4 compressor sys), 1 = 66% Run ( 6 compressor sys), 2 = 0% Run ( 4 compressor sys), 2 = 33% Run ( 6 compressor sys) |
| 3 | BACnet Object Types: 0= Analog In, 1 = Analog Out, 2= Analog Value, 3= Binary In, 4 = Binary Output, 5= Binary Value, 8= Device, 15 = Alarm Notification ( 0 -127 are reserved ASHRAE Objects) |
| 4 | WC= Inches of water column; CFM = Cubic Feer per Minute; FPM = Feet per Minute: PSI = Lbs per square inch; Pa = Pascals; kPa = Kilopascals; PPM = Part Per Million; kJ/kg = Kilojoules per Kilogram |
| 5 | See the applicable Middle Market Chiller Operations Manual for more details |
| 6 | The YCWL uses the same firmware as a YCAL , it just ignores Fan Control |
| 7 | Modbus values are all of type **signed**. Scaling values in 10X BOLD indicate that scaling in Metric is X100. Scaling and signing may not be modified in the field. |
| 8 | |
| 9 | |
| 10 | |

# RECEIVING/RIGGING INSTRUCTIONS

The installing contractor is responsible to provide York with a contact to coordinate the delivery of the equipment in this submittal. Please fill out the information requested in the Submittal Notes section in the front of this submittal.

It is the installing contractor's responsibility to verify the following prior to signing the bill of lading presented by the transportation company:

- Ensure everything on the bill of lading was delivered
- Visually perform a thorough inspection of all equipment for any signs of shipping damage

***Any short-shipments or shipping damage <u>must</u> be noted on the bill of lading prior to signing.*** The transportation company will provide you with instructions for filing a claim. It is the installing contractor's responsibility to work directly with the transportation company to resolve any shipping claims.

Appropriate sections on receiving/rigging from York's Installation Operation and Maintenance (IOM) are included in the following section.

# SECTION 3 – HANDLING AND STORAGE

## DELIVERY AND STORAGE

To ensure consistent quality and maximum reliability, all units are tested and inspected before leaving the factory. Units are shipped completely assembled and containing refrigerant under pressure. Units are shipped without export crating unless crating has been specified on the Sales Order.

If the unit is to be put into storage, prior to installation, the following precautions should be observed:

- The chiller must be "blocked" so that the base is not permitted to sag or bow.
- Ensure that all openings, such as water connections, are securely capped.
- Do not store where exposed to ambient air temperatures exceeding 110 °F (43 °C).
- The condensers should be covered to protect the fins from potential damage and corrosion, particularly where building work is in progress.
- The unit should be stored in a location where there is minimal activity in order to limit the risk of accidental physical damage.
- To prevent inadvertent operation of the pressure relief devices the unit must not be steam cleaned.
- It is recommended that the unit is periodically inspected during storage.

## INSPECTION

Remove any transit packing and inspect the unit to ensure that all components have been delivered and that no damage has occurred during transit. If any damage is evident, it should be noted on the carrier's freight bill and a claim entered in accordance with the instructions given on the advice note.

Major damage must be reported immediately to your local Johnson Controls representative.

## MOVING THE CHILLER

Prior to moving the unit, ensure that the installation site is suitable for installing the unit and is easily capable of supporting the weight of the unit and all associated services.

The units are designed to be lifted using cables. A spreader bar or frame should be used in order to prevent damage to the unit from the lifting chains.

Units are provided with lifting eyes in the sides of the base frame, which can be attached to directly using shackles or safety hooks.

WARNING

***The unit must only be lifted by the base frame at the points provided. Never move the unit on rollers, or lift the unit using a forklift truck.***

Care should be taken to avoid damaging the condenser cooling fins when moving the unit.

### Lifting Weights

For details of weights and weight distribution, refer to the data shipped in the chiller information packet and unit nameplate.

WARNING

***The unit should be lifted by inserting hooks through the holes provided in unit base rails. Spreader bars should be used to avoid crushing the unit frame rails with the lifting chains (see Figure 6 on page 32).***

## Rigging Instructions

### *Lifting Unit*

Container lugs should be inserted into the holes provided in the bottom of the frame rail.

Use spreader bars to avoid lifting chains hitting the chiller. Various methods of spreader bar arrangements may be used; keeping in mind the intent is to keep the unit stable and to keep the chains from hitting the chiller and causing damage.

CAUTION

***Never lift the chiller using a forklift or by hooking to the top rails. Use only the lifting holes provided.***

Lifting instructions are placed on a label on the chiller and on the shipping bag.

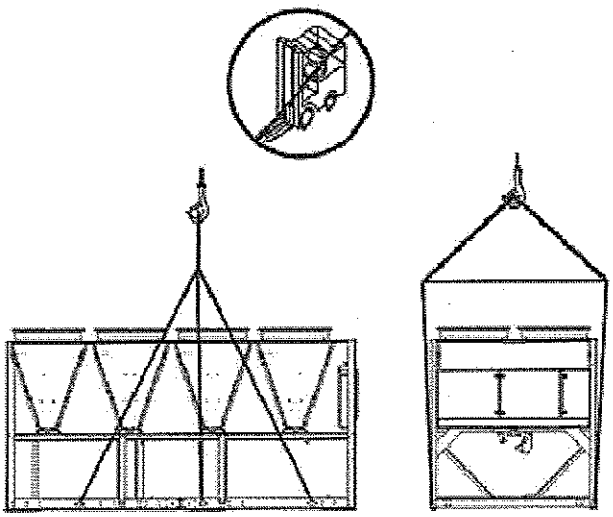

TYPICAL LIFTING ARRANGEMENT - 8 FAN MODELS

LD13137

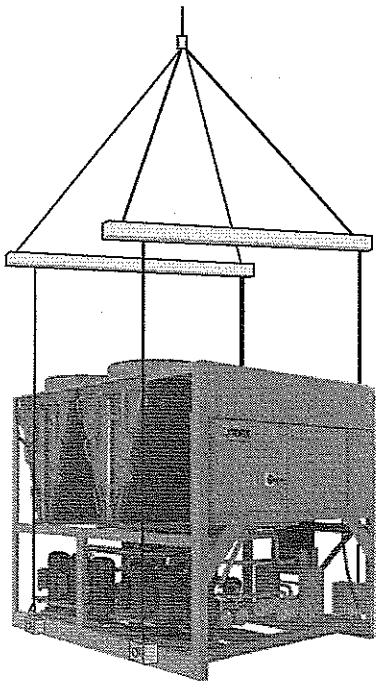

LD16706a

TYPICAL LIFTING ARRANGEMENT - 4 FAN MODELS

**FIGURE 6 -** UNIT RIGGING/LIFTING

## LIFTING USING LUGS

Units are provided with lifting holes in the base frame which accept the accessory lifting lug set as shown in the figure below. The lugs (RH and LH) should be inserted into the respective holes in the base frame and turned so that the spring loaded pin engages into the hole and the flanges on the lug lock behind the hole. The lugs should be attached to the cables/chains using shackles or safety hooks.

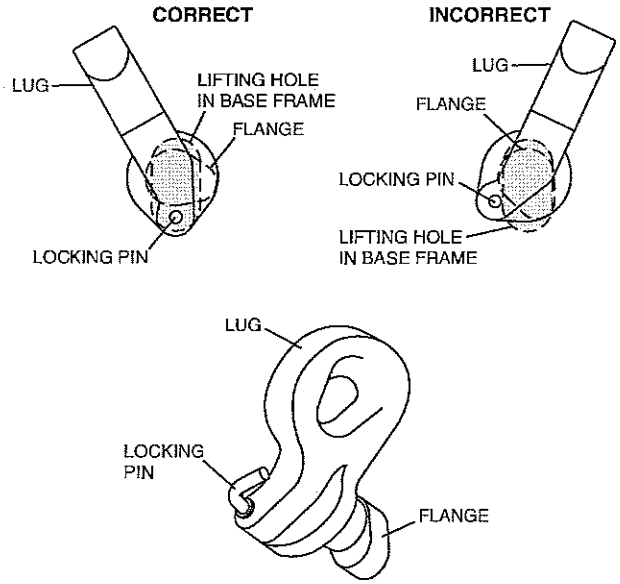


## LIFTING USING SHACKLES

The shackles should be inserted into the respective holes in the base frame and secured from the inside.

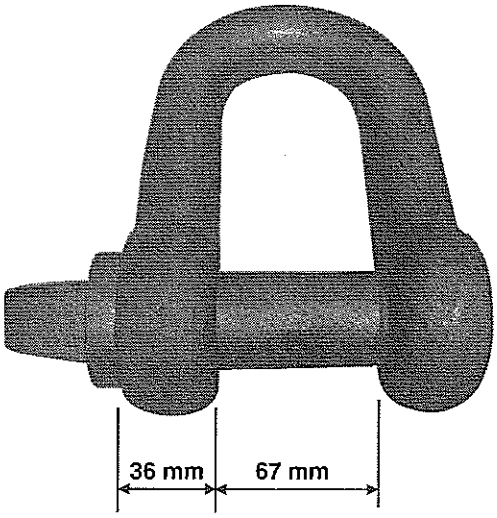


Use spreader bars to avoid lifting chains hitting the chiller. Various methods of spreader bar arrangements may be used, keeping in mind the intent is to keep the unit stable and to keep the chains from hitting the chiller and causing damage.

CAUTION

***Never lift the chiller using a forklift or by hooking to the top rails. Use only the lifting holes provided.***

Lifting Instructions are placed on a label on the chiller and on the shipping bag.

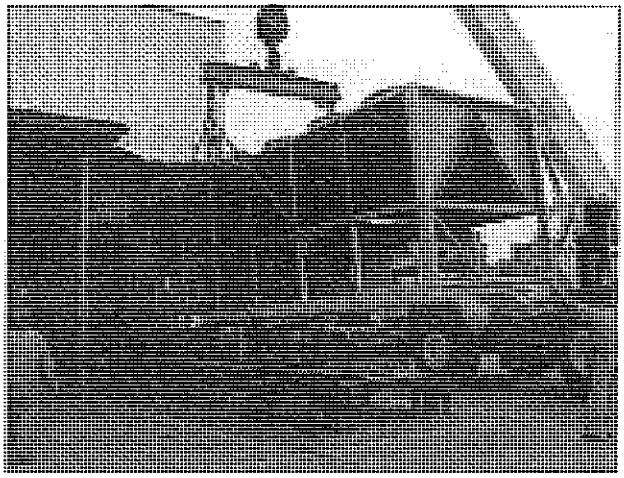

# INSTALLATION RESPONSIBILITIES

Appropriate sections on installation responsibilities from York's Installation Operation and Maintenance (IOM) are included in the following section.

# SECTION 4 – INSTALLATION

WARNING

***To ensure warranty coverage, this equipment must be commissioned and serviced by an authorized Johnson Controls service mechanic or a qualified service person experienced in chiller installation. Installation must comply with all applicable codes, particularly in regard to electrical wiring and other safety elements such as relief valves, HP cutout settings, design working pressures, and ventilation requirements consistent with the amount and type of refrigerant charge.***

***Lethal voltages exist within the control panels. Before servicing, open and tag all disconnect switches.***

## INSTALLATION CHECKLIST

The following items, 1 through 6, must be checked before placing the units in operation.

1. Inspect the unit for shipping damage.
2. Rig unit using spreader bars.
3. Open the unit only to install water piping system. Do not remove protective covers from water connections until piping is ready for attachment. Check water piping to ensure cleanliness.
4. Pipe unit using good piping practice (see ASHRAE handbook section 215 and 195).
5. Check to see that wiring is tight and meets NEC and local codes.
6. Check to see that the unit is installed and operated within limitations (Refer *Operational Limitations (English) on page 43*).

## STARTUP/COMMISSIONING

The following pages outline detailed procedures to be followed to install and start-up the chiller.

## LOCATION AND CLEARANCES

Units are designed for outdoor installations on ground level, rooftop, or beside a building. Location should be selected for minimum sun exposure and to insure adequate supply of fresh air for the condenser. The units must be installed with sufficient clearances for air entrance to the condenser coil, for air discharge away from the condenser, and for servicing access.

In installations where winter operation is intended and snow accumulations are expected, additional height must be provided to ensure normal condenser air flow.

Clearances are listed in *Figure 22 on page 84*.

### Foundation

The unit should be mounted on a flat and level foundation, floor, or rooftop capable of supporting the entire operating weight of the equipment. See *Physical Data YLAA0070 – YLAA0175 60Hz on page 46* for operating weight. If the unit is elevated beyond the normal reach of service personnel, a suitable catwalk must be capable of supporting service personnel, their equipment, and the compressors.

### Ground Level Locations

It is important that the units be installed on a substantial base that will not settle. A one piece concrete slab with footers extended below the frost line is highly recommended. Additionally, the slab should not be tied to the main building foundations as noise and vibration may be transmitted. Mounting holes (5/8" dia.) are provided in the steel channel for bolting the unit to its foundation (see *Dimensions on page 78*).

For ground level installations, precautions should be taken to protect the unit from tampering by or injury to unauthorized persons. Screws and/or latches on access panels will prevent casual tampering. However, further safety precautions such as a fenced-in enclosure or locking devices on the panels may be advisable.

### Rooftop Locations

Choose a spot with adequate structural strength to safely support the entire weight of the unit and service personnel. Care must be taken not to damage the roof.

Consult the building contractor or architect if the roof is bonded. Roof installations should have wooden beams (treated to reduce deterioration), cork, rubber, or spring type vibration isolators under the base to minimize vibration.

### Noise Sensitive Locations

Efforts should be made to assure that the chiller is not located next to occupied spaces or noise sensitive areas where chiller noise level would be a problem. Chiller noise is a result of compressor and fan operation.

## SPRING ISOLATORS (OPTIONAL)

When ordered, isolators will be furnished. Identify the isolator, locate at the proper mounting point, and adjust per instructions.

## COMPRESSOR MOUNTING

The compressors are mounted on four (4) rubber isolators. The mounting bolts should not be loosened or adjusted at installation of the chiller.

## REMOTE COOLER OPTION

Not available at this time.

## CHILLED LIQUID PIPING

**General** – When the unit(s) has been located in its final position, the unit water piping may be connected. Normal installation precautions should be observed in order to receive maximum operating efficiencies. Piping should be kept free of all foreign matter. All chilled water evaporator piping must comply in all respects with local plumbing codes and ordinances.

Since elbows, tees and valves decrease pump capacity, all piping should be kept as straight and as simple as possible. **All piping must be supported independent of the chiller.**

NOTE

***Consideration should be given to compressor access when laying out water piping. Routing the water piping too close to the unit could make compressor servicing/ replacement difficult.***

Hand stop valves should be installed in all lines to facilitate servicing.

Piping to the inlet and outlet connections of the chiller should include high-pressure rubber hose or piping loops to ensure against transmission of water pump vibration. The necessary components must be obtained in the field.

Drain connections should be provided at all low points to permit complete drainage of the cooler and system water piping.

A small valve or valves should be installed at the highest point or points in the chilled water piping to allow any trapped air to be purged. Vent and drain connections should be extended beyond the insulation to make them accessible.

The piping to and from the cooler must be designed to suit the individual installation. It is important that the following considerations be observed:

1. The chilled liquid piping system should be laid out so that the circulating pump discharges directly into the cooler. The suction for this pump should be taken from the piping system return line and not the cooler. This piping scheme is recommended, but is not mandatory.
2. The inlet and outlet cooler connection sizes are provided in *Table 5 on page 46* (Physical Data).
3. A 1/16" mesh strainer is provided at the cooler inlet line just ahead of the cooler. This is important to protect the cooler from entrance of large particles which could cause damage to the evaporator.
4. All chilled liquid piping should be thoroughly flushed to free it from foreign material before the system is placed into operation. Use care not to flush any foreign material into or through the cooler.
5. As an aid to servicing, thermometers and pressure gauges should be installed in the inlet and outlet water lines.
6. The chilled water lines that are exposed to outdoor ambients should be wrapped with supplemental heater cable and insulated to protect against freeze-up during low ambient periods, and to prevent formation of condensation on lines in warm humid locations. As an alternative, ethylene glycol should be added to protect against freeze-up during low ambient periods.
7. A chilled water flow switch, (either by YORK or others) MUST be installed in the leaving water piping of the cooler. If the factory wired flow switch and extension pipe kit is not selected, the field installed flow switch must be installed so that there is a straight horizontal run of at least 5 diameters on each side of the switch. Adjust the flow switch paddle to the size of the pipe in which it is to be installed (see manufacturer's instructions furnished with the switch). The switch is to be wired to Terminals 13 and 14 of XTBC1 located in the control panel, as shown on the unit wiring diagram.

CAUTION

***The Flow Switch MUST NOT be used to start and stop the chiller (i.e. starting and stopping the chilled water pump). It is intended only as a safety switch.***

## PIPEWORK ARRANGEMENT

The following are suggested pipework arrangements for single unit installations, for multiple unit installations, each unit should be piped as shown.

**Recommendations of the Building Services Research Association.**

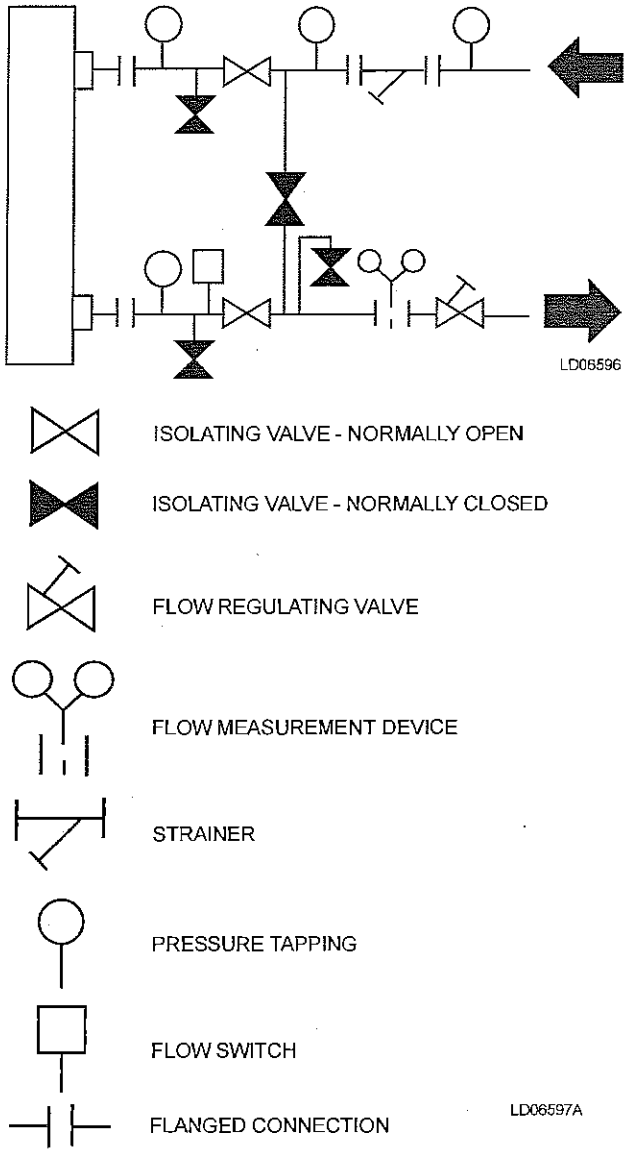


**FIGURE 7 - CHILLED LIQUID SYSTEM**

### Fan Discharge Ducting

The following duct work recommendations are intended to ensure satisfactory operation of the unit. Failure to follow these recommendations could cause damage to the unit, or loss of performance, and may invalidate the warranty.

When ducting is to be fitted to the fan discharge it is recommended that the duct should be the same cross-sectional area as the fan outlet and straight for at least three feet (1 meter) to obtain static regain from the fan. Duct work should be suspended with flexible hangers to prevent noise and vibration being transmitted to the structure. A flexible joint is also recommended between the duct attached to the fan and the next section for the same reason. Flexible connectors should not be allowed to concertina.

The unit is not designed to take structural loading. No significant amount of weight should be allowed to rest on the fan outlet flange, deck assemblies or condenser coil module. No more than 3 feet (1 meter) of light construction duct work should be supported by the unit. Where cross winds may occur, any duct work must be supported to prevent side loading on the unit.

If the ducts from two or more fans are to be combined into a common duct, back-flow dampers should be fitted in the individual fan ducts. This will prevent recirculation of air when only one of the fans is running.

Units are supplied with outlet guards for safety and to prevent damage to the fan blades. If these guards are removed to fit duct work, adequate alternative precautions must be taken to ensure persons cannot be harmed or put at risk from rotating fan blades.

## WIRING

Liquid Chillers are shipped with all factory-mounted controls wired for operation.

**Field Wiring** – Power wiring must be provided through a fused disconnect switch to the unit terminals (or optional molded disconnect switch) in accordance with N.E.C. or local code requirements. Minimum circuit ampacity and maximum dual element fuse size are given in the Electrical Data tables.

Copper power wiring only should be used for supplying power to the chiller. This is recommended to avoid safety and reliability issues resulting from connection failure at the power connections to the chiller. Aluminum wiring is not recommended due to thermal characteristics that may cause loose terminations resulting from the contraction and expansion of the wiring. Aluminum oxide may also build up at the termination causing hot spots and eventual failure. If aluminum wiring is used to supply power to the chiller, AL-CU compression fittings should be used to transition from

aluminum to copper. This transition should be done in an external box separate to the power panel. Copper conductors can then be run from the box to the chiller.

A 120-1-60, 15 amp source must be supplied for the control panel through a fused disconnect when a control panel transformer (optional) is not provided (Refer to *Figure 8 on page 39*).

See unit wiring diagrams for field and power wiring connections, chilled water pump starter contacts, alarm contacts, compressor run status contacts, PWM input, and load limit input. Refer to *SECTION 8 – UNIT OPERATION* for a detailed description of operation concerning aforementioned contacts and inputs.

## RELIEF VALVES

Relief valves are located on both the high and low pressure side of the piping. High side relief valve pressure setting is 650 PSIG. Low side relief valve pressure setting is 450 PSIG.

## HIGH PRESSURE CUTOUT

A high pressure cutout is installed in the discharge piping of each system. The cutout opens at 585 PSIG plus or minus 10 PSIG and closes at 440 PSIG plus or minus 25 PSIG.

### Evaporator Pump Start Contacts

Terminal block XTBC2 – Terminals 23 (115VAC) to 24, are normally- open contacts that can be used to switch field supplied power to provide a start signal to the evaporator pump contactor. The contacts will be closed when any of the following conditions occur:

1. Low Leaving Chilled Liquid Fault
2. Any compressor is running
3. Daily schedule is not programmed OFF and the Unit Switch is ON

The pump will not run if the micro panel has been powered up for less than 30 seconds, or if the pump has run in the last 30 seconds, to prevent pump motor overheating. Refer to *Figure 10 on page 41* and unit wiring diagram.

### System Run Contacts

Contacts are available to monitor system status. Normally-open auxiliary contacts from each compressor contactor are wired in parallel with XTBC2 – Terminals 25 to 26 for system 1, and XTBC2 – Terminals 27 to 28 for system 2. Refer to *Figure 4 on page 23*, *Figure 10 on page 41* and unit wiring diagram.

### Alarm Status Contacts

Normally-open contacts are available for each refrigerant system. These normally-open contacts close when the system is functioning normally. The respective contacts will open when the unit is shut down on a unit fault, or locked out on a system fault. Field connections are at XTBC2 - Terminals 29 to 30 (system 1), and Terminals 31 to 32 (system 2).

### Remote Start/Stop Contacts

To remotely start and stop the chiller, dry contacts can be wired across terminals 13 and 51 on XTBC1. Refer to *Figure 4 on page 23*, *Figure 9 on page 40* and unit wiring diagram.

### Remote Emergency Cutoff

Immediate shutdown of the chiller can be accomplished by opening a field-installed dry contact to break the electrical circuit between Terminals 5 to L on terminal block XTBC2 . The unit is shipped with a factory jumper installed between Terminals 5 to L, which must be removed if emergency shutdown contacts are installed. Refer to *Figure 9 on page 40* and unit wiring diagram.

### Remote Temp Reset Input

The Remote Temp Reset input allows reset of the chilled liquid setpoint by supplying a voltage or current signal field wiring should be connected to XTBC1 – Terminals A+ to A-. A detailed explanation is provided in *SECTION 7 – UNIT CONTROLS*. Refer to *Figure 3 on page 22*, *Figure 4 on page 23* and unit wiring diagram.

### Load Limit Input

Load limiting is a feature that prevents the unit from loading beyond a desired value. The unit can be "load limited" either 33%, 40%, 50%, 66% or 80%, depending on the number of compressors on unit. The field connections are wired to XTBC1 – Terminals 13 to 21, and work in conjunction with the PWM inputs. A detailed explanation is provided in *SECTION 7 – UNIT CONTROLS*. Refer to *Figure 4 on page 23*, *Figure 9 on page 40* and unit wiring diagram.

NOTE

***When using the Load Limit feature, the PWM feature will not function – SIMULTANEOUS OPERATION OF LOAD LIMITING AND TEMPERATURE RESET (PWM INPUT) CANNOT BE DONE.***

## SINGLE-POINT SUPPLY CONNECTION – TERMINAL BLOCK, NON-FUSED DISCONNECT SWITCH OR CIRCUIT BREAKER

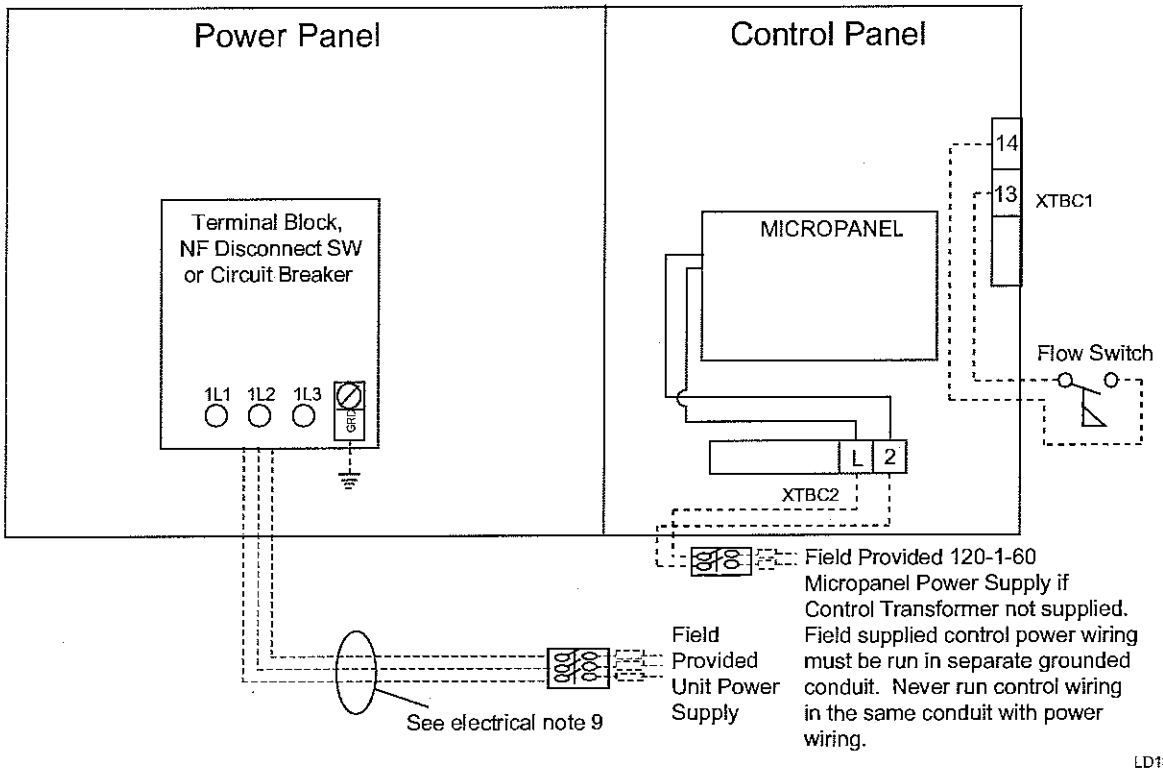

***It is possible that multiple sources of power can be supplying the unit power panel. To prevent serious injury or death, the technician should verify that NO LETHAL VOLTAGES are present inside the panel AFTER disconnecting power, PRIOR to working on equipment.***

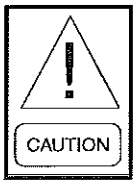


***The unit evaporator heater uses 120VAC. Disconnecting 120VAC power from the unit, at or below freezing temperatures, can result in damage to the evaporator and unit as a result of the chilled liquid freezing.***

**FIGURE 8** - SINGLE-POINT SUPPLY CONNECTION – TERMINAL BLOCK, NON-FUSED DISCONNECT SWITCH OR CIRCUIT BREAKER OR CIRCUIT BREAKER

# USER CONTROL WIRING INPUTS

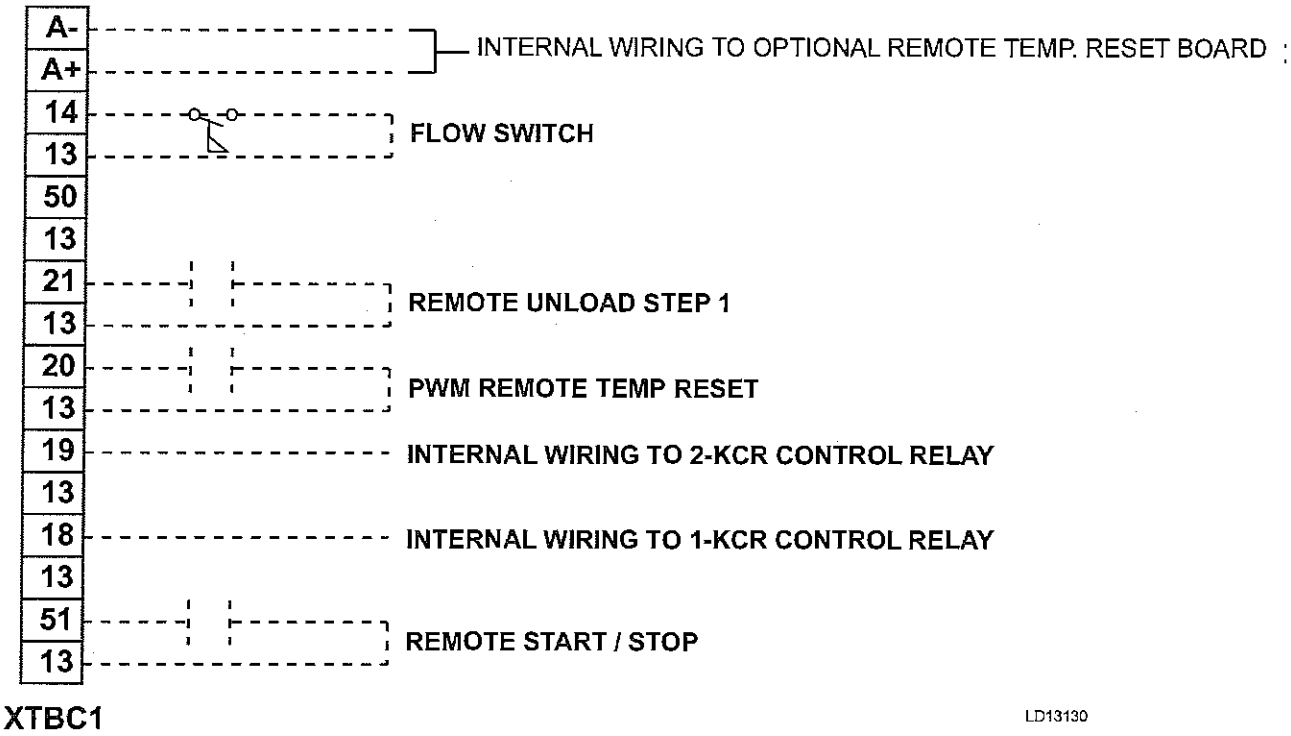


NOTE

*All externally supplied contacts must be capable of switching 24VDC / 115 VAC. Gold contacts are recommended. If supplied contacts are from a Relay / Contactor (Inductive Load), the coil of the Relay / Contactor must be suppressed. Typical suppressor is P/N 031-00808-000.*

WARNING

*It is possible that multiple sources of power can be supplying the unit power panel. To prevent serious injury or death, the technician should verify that NO LETHAL VOLTAGES are present inside the panel AFTER disconnecting power, PRIOR to working on equipment.*

CAUTION

*The unit evaporator heater uses 120VAC. Disconnecting 120VAC power from the unit, at or below freezing temperatures, can result in damage to the evaporator and unit as a result of the chilled liquid freezing.*

**FIGURE 9** - CONTROL WIRING INPUTS

# USER CONTROL WIRING OUTPUTS

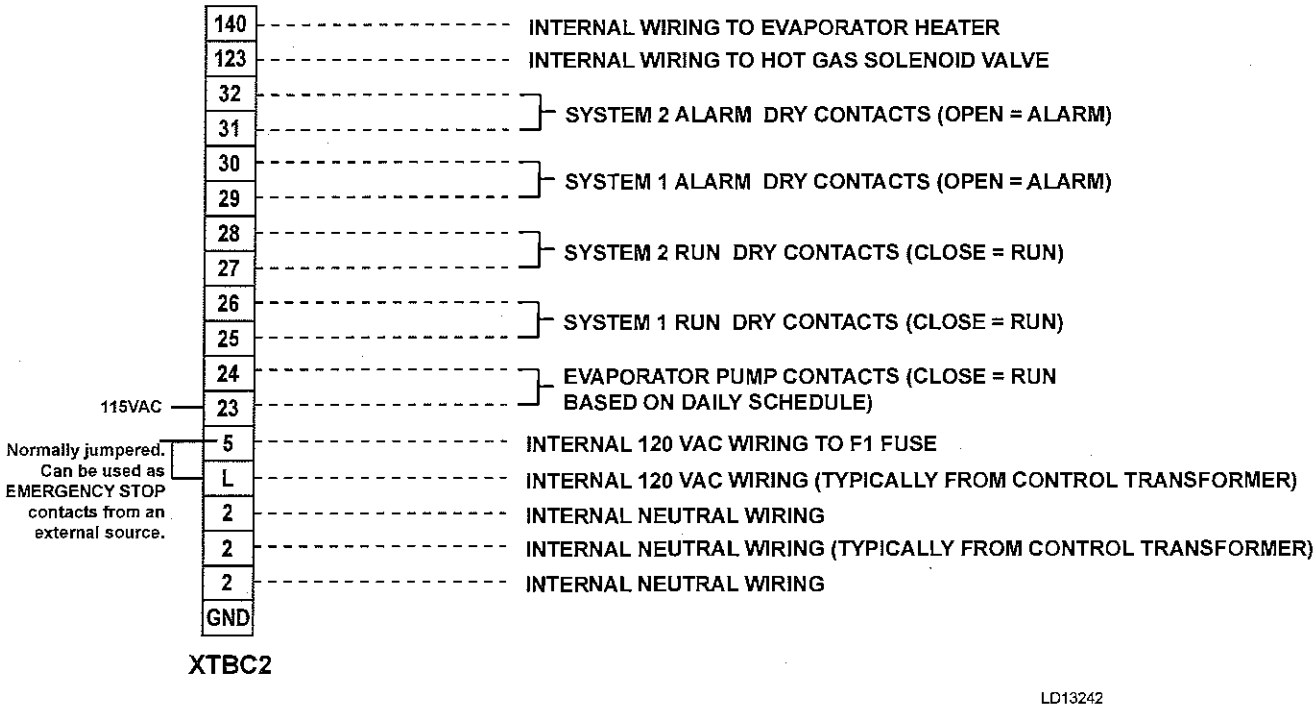


NOTE

*All chiller supplied contacts are rated at 115VAC, 100VA, resistive load only, and must be suppressed at the load by user if powering an inductive load (Relay / Contactor Coil). Typical suppressor P/N is 031-00808-000.*

WARNING

*It is possible that multiple sources of power can be supplying the unit power panel. To prevent serious injury or death, the technician should verify that NO LETHAL VOLTAGES are present inside the panel AFTER disconnecting power, PRIOR to working on equipment.*

CAUTION

*The unit evaporator heater uses 120VAC. Disconnecting 120VAC power from the unit, at or below freezing temperatures, can result in damage to the evaporator and unit as a result of the chilled liquid freezing.*

**FIGURE 10** - CONTROL WIRING OUTPUTS

# WARRANTY INFORMATION

**18 months (1 Year) Labor Only Warranty**
**FOR THE ENTIRE UNIT**
**YORK INTERNATIONAL CORPORATION**
**ENGINEERED SYSTEMS - YORK AMERICAS**

| | | |
|---|---|---|
| PRODUCT TYPE: | Air Cooled Scroll Chillers | COMPRESSOR SERIAL NUMBER(S): |
| YORK CONTRACT NO.: | | |
| UNIT MODEL NUMBER: | YLAA0175HE | |
| UNIT SERIAL NUMBER: | | |
| UNIT TAG ID: | ACC-A1 | |
| UNIT LOCATION: | | |

PROJECT NAME: KMW: McHenry County
Installation Address:
,

_____
Shipping Date

The term of this agreement is 18 months (1 Year), commencing _____ and expires _____.

**LIMITED WARRANTY**

WHEN PROPERLY ENDORSED, THIS PROTECTION PLAN BETWEEN YORK INTERNATIONAL CORPORATION (YORK) AND CUSTOMER, WARRANTS, TO THE CUSTOMER NAMED HEREIN, *** UNASSIGNED *** FOR THE . IT DOES NOT COVER REFRIGERANT COST, FREIGHT CHARGES, OR ANY OTHER COSTS.

THIS WARRANTY EXCLUDES IMPLIED WARRANTIES OF MERCHANTABILITY AND FITNESS FOR A PARTICULAR PURPOSE, AND WE DO NOT ASSUME, OR AUTHORIZE ANY OTHER PERSON TO ASSUME OTHER WARRANTIES FOR US. THIS WARRANTY IS OFFERED AS AN EXTENSION TO THE STANDARD LIMITED WARRANTY (FORM 50.05-NM2) AND IS SUBJECT TO THE SAME LIMITATIONS AND EXCLUSIONS, EXCEPT WHERE NOTED.

THIS PROTECTION PLAN DOES NOT COVER FAILURE OR DAMAGE RESULTING FROM FIRE, FLOOD, ABUSE, OR ACT OF GOD. ALSO EXCLUDED ARE DAMAGES OR FAILURES CAUSED BY INSTALLATION, OPERATION, OR MAINTENANCE CONTRARY TO YORK RECOMMENDATIONS, OR THOSE OF THE MANUFACTURER IF OTHER THAN YORK. IN NO EVENT SHALL YORK BE LIABLE FOR CONSEQUENTIAL, INCIDENTAL, OR INDIRECT DAMAGE, LOSS, OR INJURY. WARRANTY FOR EXCHANGE OR PARTS PROCUREMENT SERVICE SHALL BE AVAILABLE THROUGH THE SERVICER LISTED HEREIN DURING NORMAL WORKING HOURS.

DISTRICT SERVICE OFFICE: _____

OFFERED BY: _____ York Selling Representative Print/Sign _____ Date

APPROVED BY: _____ York Area Service Manager Print/Sign _____ Date

ACCEPTED BY: _____ Customer Signature _____ Date

(Manufacturer's Use Only)

AUTHORIZED BY: _____ Manager, Warranty Administration _____ 11/21/2013 Date

Product Code Ref: 8123

**18 MONTHS (1 YEAR)**
**FOR THE REFRIGERANT**
**YORK INTERNATIONAL CORPORATION**
**ENGINEERED SYSTEMS - YORK AMERICAS**

| | | |
|---|---|---|
| PRODUCT TYPE: | AIR COOLED SCROLL CHILLERS | COMPRESSOR SERIAL NUMBER(S): |
| YORK CONTRACT NO.: | | |
| UNIT MODEL NUMBER: | YLAA0175HE | |
| UNIT SERIAL NUMBER: | | |
| UNIT TAG ID: | ACC-A1 | |
| UNIT LOCATION: | | |

PROJECT NAME: KMW: MCHENRY COUNTY
INSTALLATION ADDRESS:

Shipping Date

The term of this agreement is 18 months (1 Year), commencing _____ and expires _____.

**LIMITED WARRANTY**

WHEN PROPERLY APPROVED AND AUTHORIZED BELOW, YORK INTERNATIONAL CORPORATION (YORK) WARRANTS TO THE CUSTOMER NAMED HEREIN, THAT YORK WILL PROVIDE THE CUSTOMER FREE OF CHARGE, WITH REPLACEMENT REFRIGERANT IN THE CASE OF ANY REFRIGERANT LOSS DUE TO ACCIDENTAL SYSTEM LEAKS. SERVICES TO RECYCLE CONTAMINATED REFRIGERANT ARE ALSO INCLUDED IN THE EVENT OF SYSTEM CONTAMINATION. THIS WARRANTY IS OFFERED ON PACKAGED STATIONARY WATER CHILLERS WITHIN THE EXTENDED WARRANTY PERIOD STATED ABOVE, AND IS TO BE OFFERED IN CONJUNCTION WITH A YORK 'MAINTENANCE CONTRACT' OR A YORK 'REFRIGERANT CONSERVATION SERVICE CONTRACT.' WE DO NOT AUTHORIZE ANY OTHER ENTITY TO PERFORM WARRANTY SERVICE ON OUR BEHALF. THIS WARRANTY IS OFFERED AS AN EXTENSION TO THE STANDARD LIMITED WARRANTY (FORM 50.05-NM2) AND IS SUBJECT TO THE SAME LIMITATIONS AND EXCLUSIONS STATED THEREIN, WHICH ARE HEREBY INCORPORATED HEREIN BY REFERENCE REMOTE EVAPORATOR, REMOTE CONDENSER, FINNED TUBE, AND MOBILE UNITS ARE EXCLUDED FROM THIS COVERAGE.

THIS WARRANTY DOES NOT COVER REFRIGERANT LOSS RESULTING FROM FIRE, FLOOD, ABUSE, OR ACT OF GOD. ALSO EXCLUDED ARE DAMAGES OR FAILURES CAUSED BY OPERATION OR MAINTENANCE CONTRARY TO THE RECOMMENDATIONS OF THE EQUIPMENT MANUFACTURER. IN NO EVENT SHALL YORK BE LIABLE FOR SPECIAL CONSEQUENTIAL, INCIDENTAL, OR INDIRECT DAMAGE, LOSS OR INJURY OF ANY NATURE. WARRANTY SERVICE SHALL BE PROVIDED THROUGH THE SERVICER LISTED HEREIN DURING NORMAL WORKING HOURS AND AFTER SYSTEM FAULTS HAVE BEEN REPAIRED.

THE WARRANTY AND LIABILITY SET FORTH ABOVE ARE IN LIEU OF ALL OTHER WARRANTIES AND LIABILITIES, EXPRESS OR IMPLIED IN LAW OR IN FACT, INCLUDING THE WARRANTIES OF MERCHANTABILITY AND FITNESS FOR A PARTICULAR PURPOSE. THE WARRANTIES CONTAINED HEREIN SET FORTH BUYER'S SOLE AND EXCLUSIVE REMEDY IN THE EVENT OF A DEFECT IN WORKMANSHIP OR MATERIALS.

DISTRICT SERVICE OFFICE: _____

OFFERED BY: _____ York Selling Representative Print/Sign _____ Date

APPROVED BY: _____ York Area Service Manager Print/Sign _____ Date

ACCEPTED BY: _____ Customer Signature _____ Date
(Manufacturer's Use Only)

AUTHORIZED BY: Robert D. Halaczewski
Manager, Warranty Administration

11/21/2013
Date

Product Code Ref: 8199

| Johnson Controls | STANDARD LIMITED WARRANTY ENGINEERED SYSTEMS EQUIPMENT | |
|---|---|---|
| SERVICE POLICY | Supersedes: 50.05-NM2 (812) | Form 50.05-NM2 (1212) |

## POLICY STATEMENT

Johnson Controls (JCI) warrants all equipment and associated factory supplied materials or start-up services performed by Johnson Controls in connection therewith, against defects in workmanship and material for a period of eighteen (18) months from date of shipment, or twelve (12) months from date of start up, whichever occurs first. Subject to the exclusions listed below, Johnson Controls, at its option, will repair or replace, FOB point of shipment, such products or components as it finds defective.

Except for reciprocating replacement compressors, which Johnson Controls warrants for a period of twelve (12) months from date of shipment, Johnson Controls warrants Johnson Controls reconditioned or replacement materials, or installation or start-up services performed by Johnson Controls in connection therewith, against defects in workmanship and material for a period of (90) days from date of shipment.

The above represents the minimum warranty policy Johnson Controls will extend to customers. Additional product specific coverage is provided as outlined in related warranty policies. No warranty repairs or replacements will be made until payment for all equipment, materials, or components has been received by Johnson Controls.

## EXCLUSIONS:

Unless specifically agreed to in the contract documents, this warranty does not include the following costs and expenses:

1. Labor to remove or reinstall any equipment, materials or components.
2. Shipping, handling or transportation charges, including cranes, safety walks or other safety requirements specific to jobsites.
3. Cost of refrigerant.
4. Freight damage.
5. Field applied coatings added to any surface or heat exchanger.
6. Rental Chillers.

## ALL WARRANTIES ARE VOID IF:

1. Equipment is used with refrigerants, oil, additives, or antifreeze agents other than those authorized by supplying factory.
2. Equipment is used with any material or any equipment such as evaporators, tubing, other low side equipment or refrigerant controls not approved by supplying factory.
3. Equipment has been damaged by freezing because it was not properly protected during cold weather or damaged by fire or any other conditions not ordinarily encountered.
4. Equipment is not installed, operated, maintained and serviced in accordance with instructions issued by Johnson Controls.
5. Equipment is damaged due to dirt, air, moisture, or other foreign matter entering the refrigerant system.
6. Equipment is not properly stored, protected, or inspected by the customer during the period from date of shipment to date of initial start-up.
7. Field coating of coil has occurred.
8. Equipment is damaged due to acts of god, abuse, including shipping damage, neglect, sabotage, or acts of terrorists.
9. Equipment has modifications carried out that have an effect on the original design of the product without such work being authorized by the factory. Any on site design changes or unit modification/replacement shall be authorized in advance by the factory.

THIS WARRANTY IS IN LIEU OF ALL OTHER WARRANTIES AND LIABILITIES, EXPRESS OR IMPLIED IN LAW OR IN FACT, INCLUDING THE WARRANTIES OF MERCHANTABILITY AND FITNESS FOR A PARTICULAR PURPOSE. THE WARRANTIES CONTAINED HEREIN SET FORTH BUYER'S SOLE AND EXCLUSIVE REMEDY IN THE EVENT OF A DEFECT IN WORKMANSHIP OR MATERIALS. IN NO EVENT SHALL JOHNSON CONTROLS' LIABILITY FOR DIRECT OR COMPENSATORY DAMAGES EXCEED THE PAYMENTS RECEIVED BY JOHNSON CONTROLS FROM BUYER FOR THE MATERIAL OR EQUIPMENT INVOLVED, NOR SHALL JOHNSON CONTROLS BE LIABLE FOR ANY SPECIAL, INCIDENTAL, OR CONSEQUENTIAL DAMAGES. THESE LIMITATIONS ON LIABILITY AND DAMAGES SHALL APPLY UNDER ALL THEORIES OF LIABILITY OR CAUSES OF ACTION, INCLUDING BUT NOT LIMITED TO, CONTRACT, WARRANTY, TORT, (INCLUDING NEGLIGENCE) OR STRICT LIABILITY. THE ABOVE LIMITATIONS SHALL INURE TO THE BENEFIT OF JOHNSON CONTROLS SUPPLIERS AND SUBCONTRACTORS.

Johnson Controls

Copyright © 2012 Johnson Controls, Inc.
Reference: BOS 03-23.105.BEGTM

P.O. Box 423, Milwaukee, WI 53203
www.johnsoncontrols.com

Printed in USA 50.05-NM2 (1212)
Replaces: 50.05-NM2 (812)

# START-UP FORMS

Supersedes: 150.72-CL1 (812)

Form 150.72-CL1 (1112)

YORK BY JOHNSON CONTROLS

**MODEL - YLAA**

## INSTALLATION CHECKLIST AND REQUEST FOR AUTHORIZED STARTUP ENGINEER

CUSTOMER: _____ JOB NAME: _____

ADDRESS: _____ LOCATION: _____

PHONE: _____ CUSTOMER ORDER NO: _____

JCI TEL NO: _____ JCI ORDER NO: _____ JCI CONTRACT NO: _____

**CHILLER MODEL NO:** _____ **UNIT SERIAL NO:** _____

**The work (as checked below) is in process and will be completed by:** _____ / _____ / _____
Month Day Year

**The following work must be completed in accordance with installation instructions:**

### A. PRE-STARTUP

**Unit Checks (No Power)**

The following basic checks should be made with the customer power to the unit switched OFF.

1. Inspect the unit for shipping or installation damage ..... ☐
2. Assure that all piping has been completed. ..... ☐
3. Visually check for refrigerant piping leaks ..... ☐
4. Open suction line ball valve, discharge line ball valve, and liquid line valve for each system..... ☐
5. The compressor oil level should be maintained so that an oil level is visible or splashing in the sight glass when fully loaded. At shutdown, the oil level should be between the bottom and middle of the oil equalizing sight glass. ..... ☐
6. Assure water pumps are ON. Check and adjust water pump flow rate and presure drop across the cooler (see "Operational Limitations" (English)). Verify flow switch operation..... ☐

   **NOTE:** Excessive flow may cause catastrophic damage to the heat exchanger (evaporator)
7. Check the control panel to ensure it is free of foreign material (wires, metal chips etc.) ..... ☐
8. Visually inspect wiring (power and control) Wiring MUST meet N.E.C. and local codes. ..... ☐
9. Check tightness of power wiring inside the power panel on both sides of the motor contactors and overloads..... ☐
10. Check for proper size fuses in main and control circuits, and verify overload setting corresponds with RLA and FLA values in electrical tables (see Table 8 and Table) ..... ☐
11. Assure 120VAC Control Power to TB1 has 15 amp minimum capacity..... ☐
12. Be certain all water temp sensors are inserted completely in their respective wells and are coated with heat conductive compound..... ☐
13. Assure that evaporator TXV bulbs are strapped onto the suction lines at 4 or 8 o'clock positions or suction temp. sensors if EEVs are installed. .. ☐

### B. COMPRESSOR HEATER
**(Power On - 24 Hours Prior To Start)**

Apply 120VAC and verifiy its value between Terminals 5 and 2 of XTBC2. The voltage should be 120VAC plus or minus 10% ..... ☐

**NOTE:** Power must be applied 24 hours prior to start-up. Each heater should draw approximately 0.5 to 1A.

### C. STARTUP

**Panel checks (Power On - Both unit switch Off)**

1. Apply 3-phase power and verify its value. Voltage imbalance should be no more than 2% of the average voltage. ..... ☐
2. Apply 120VAC and verify its value on the terminal block in the Power Panel. Make the measurement between Terminals 5 and 2 of XTBC2. The voltage should be 120VAC plus or minus 10% ..... ☐
3. Program/verify the Cooling Setpoints, Program Setpoints, and unit Options. Record the values in the following table (see "SETPOINTS KEYS" and "UNIT KEYS" in Section 7 of Form 150.72-ICOM6 for programming instruction). ..... ☐
4. Put the unit into Service Mode (see "SERVICE MODE" in Section 9 of Form 150.72-ICOM6) and cycle each condenser fan to ensure proper rotation. ..... ☐

6

SETPOINTS ENTRY LIST

| OPTIONS | |
|---|---|
| Display Language | |
| Sys 1 Switch | |
| Sys 2 Switch | |
| Chilled Liquid | |
| Ambient Control* | |
| Local/Remote Mode | |
| Control Mode | |
| Display Units | |
| Lead/Lag Control* | |
| Fan Control* | |
| Manual Override | |
| Current Feedback | |
| Soft Start** | |
| Unit Type** | |
| Refrigerant Type** | |
| Expansion Valve Type** | |
| **COOLING SETPOINTS** | |
| Cooling Setpoint | |
| Range | |
| EMS-PWM Max. Setpoint | |
| **PROGRAM** | |
| Discharge Pressure Cutout | |
| Suct. Pressure Cutout | |
| Low Amb. Temp. Cutout | |
| Leaving Liquid Temp. Cutout | |
| Anti-Recycle Time | |
| Fan Control ON Pressure | |
| Fan Differential OFF Pressure | |
| Total # of Compressors | |
| Number of Fans/System* | |
| Unit/Sys Voltage* | |
| Unit ID | |

*Not on All Models **Viewable Only

5. Prior to this step, turn system 2 OFF (if applicable –refer to Option 2 under "UNIT KEYS" on page 2 for more information on system switches). Connect a manifold gauge to system 1 suction and discharge service valves. ..... ☐

   Place the Unit Switch in the control panel to the ON position.

   **NOTE:** The chilled liquid setpoint may need to be temporarily lowered to ensure all compressors cycle ON.

   As each compressor cycles ON, ensure that the discharge pressure rises and the suction pressure decreases. If this does not occur, the compressor being tested is operating in the reverse direction and must be corrected. After verifying proper compressor rotation, turn the Unit Switch to "OFF."

   **NOTE:** This unit uses scroll compressors which can only operate in one direction. Failure to observe this will lead to compressor failure.

6. Turn system 1 OFF and system 2 ON (refer to "Option 2 – System Switches (two system units only)" under "UNIT KEYS" for more information on system switches)). ..... ☐

   Place the Unit Switch in the control panel to the ON position.

   **NOTE:** The chilled liquid setpoint may need to be temporarily lowered to ensure all compressors cycle ON.

   As each compressor cycles ON, ensure that the discharge pressure rises and the suction pressure decreases. If this does not occur, the compressor being tested is operating in the reverse direction and must be corrected. After verifying proper co pressor rotation, turn the Unit Switch to OFF.

## D. CHECKING SUPERHEAT AND SUBCOOLING

The subcooling temperature of each system can be calculated by recording the temperature of the liquid line at the outlet of the condenser and subtracting it from the liquid line saturation temperature at the liquid stop valve (liquid line saturation temp. is converted from a temperature/pressure chart).

Example:

| | |
|---|---|
| Liquid line pressure = 325 PSIG converted to temp. | 101 °F |
| minus liquid line temp. | - 83 °F |
| Subcooling = | 18 °F |

The subcooling should be adjusted to 18 °F (-8 °C) at design conditions.

1. Record the liquid line pressure and its corresponding temperature, liquid line temperature and subcooling below: ..... ☐

| | SYS 1 | SYS 2 | |
|---|---|---|---|
| Liq Line Press = | _____ | _____ | PSIG |
| Saturated Temp = | _____ | _____ | °F |
| Liq Line Temp = | _____ | _____ | °F |
| Subcooling = | _____ | _____ | °F |

After the subcooling is verified, the suction superheatshould be checked. The superheat should be checked only after steady state operation of the chiller has been established, the leaving water temperature has been pulled down to the required leaving water temperature, and the unit is running in a fully loaded condition. Correct superheat setting for a system is 10 °F to 15 °F (5.56 °C to 8.33 °C) 18" (46 cm) from the heat exchanger.

**Superheat should typically be set for no less than 10 °F with only a single compressor running on a circuit.** The superheat is calculated as the difference between the actual temperature of the returned refrigerant gas in the suction line

entering the compressor and the temperature corresponding to the suction pressure as shown in a standard pressure/temperature chart.

Example:

| | |
|---|---|
| Suction Temp = | 46 °F |
| minus Suction Press 105 PSIG converted to Temp | - 34 °F |
| Superheat = | 12 °F |

When adjusting the expansion valve (TXV only), the adjusting screw should be turned not more than one turn at a time, allowing sufficient time (approximately 15 minutes) between adjustments for the system and the thermal expansion valve to respond and stabilize.

Assure that superheat is set at a minimum of 10 °F (5.56 °C) with a single compressor running on each circuit.

2. Record the suction temperature, suction pressure, suction saturation temperature, and superheat of each system below: ..... ☐

| | SYS 1 | SYS 2 | |
|---|---|---|---|
| Suction Temp = | _____ | _____ | °F |
| Suction Pressure = | _____ | _____ | PSIG |
| Saturation Temp = | _____ | _____ | °F |
| Superheat = | _____ | _____ | °F |

**E. Leak Checking**

Leak check compressors, fittings, and piping to ensure no leaks..... ☐

If the unit is functioning satisfactorily during the initial operating period, no safeties trip and the compressors cycle to control water temperature to setpoint, the chiller is ready to be placed into operation.

**Owner's operating personnel:**

Name: _____

Phone Number: _____

Name: _____

Phone Number: _____

Name: _____

Phone Number: _____

6

## CONTRACTOR'S RESPONSIBILITIES AND INSTRUCTIONS TO USE FORM

This installation checklist provides a quick way to check if all necessary installation work was completed in accordance with all applicable installation instructions in Form 150.72-ICOM6, and when completed, acts as a request for Johnson Controls to furnish start-up supervision.

Complete this form as follows:

1. Fill out the top of the page.
2. Check off each item as required. Cross out (x) items that do not apply.
3. Enter names, initials, and date of the operating personnel who completed the checklist.
4. **Bottom of Form:** Enter the date that the Johnson Controls start-up technician should be at the job site and the name(s) of the supervisor(s) to be contacted.
5. Retain one copy in files and send one copy to customer.

---

With reference to the terms of the above contract, we are requesting the presence of your JCI Authorized Representative at the job site on _____ / _____ / _____ to start the system and instruct operating personnel. Have the JCI representative contact: _____
Month Day Year Name/Phone

We understand that the services of the Johnson Controls Authorized Representative will be furnished in accordance with the contract for a period of time of not more than _____ consecutive normal working hours, and we agree that a charge of _____ per diem plus travel expenses will be made to Johnson Controls if services are required for longer than _____ consecutive normal hours or if repeated calls are required, through no fault of Johnson Controls.

**Customer/Contractor Signature:** _____

**Title:** _____

**Form Completed by:** _____

Johnson Controls

**Grumman/Butkus Associates**
*Energy Efficiency Consultants and Sustainable Design Engineers*
820 Davis Street, Suite 300
Evanston, Illinois 60201 4446
Main 847 -328-3555 | www.grummanbutkus.com

# Submittal Review

| | | | |
|---|---|---|---|
| Date: | December 3, 2013 | Submittal #: | M-01 |
| Re: | McHenry County Government Center<br>A-Mod Chiller Replacements<br>G/BA#P13-0334-00 | Equipment: | 23 6423 Air-Cooled Chillers |

*Following are the review comments for the above referenced shop drawing submittal. Unless noted otherwise, these comments ARE NOT marked on the attached individual submittals, but should be incorporated as if the comments were marked on the submittals.*

1. Accessories section indicates flow switch is integral to extended piping. Please confirm.
2. A minimum of eight (8) hours of controls integration shall be provided per 3.2B.
3. Field services shall include manufacturer inspection of vibration isolators per 3.2C.
4. A minimum of eight (8) hours of training shall be provided per 3.3A.

SHOP DRAWING REVIEW

| ENGINEER'S REVIEW | | CONTRACTOR'S RESPONSE REQUIREMENTS | |
|---|---|---|---|
| COMPLIES WITH DESIGN INTENT | | NONE | X |
| COMMENTS NOTED | X | RESPONSE TO ENGINEER IN WRITING | |
| REJECTED | | RESUBMIT | |

Engineer's Review is only conformance with the design concept of the Project and for compliance with the information given in the contract documents, not including dimensions, sizes, quantities, installation instructions, calculations, fabrication processes, specified performance criteria, materials, coordination of the work depicted with that of other trades, or the means, methods, techniques, sequences or procedures of construction utilized to perform the work depicted or to safety programs or precautions incident thereto. Where the Contractor is required by the Contract Documents to professionally certify to the work depicted, Grumman/Butkus shall be entitled to rely on the contractors having done so, whether or not a professional seal or other indication of certification appears.

Submittal No. M-01 Date 12/3/13 By Matthew S. Butkus

Grumman/Butkus Associates Evanston, IL 847 328.3555

*THIS PAGE IS MANDATORY*

**BID ON**

**BASE BID 1 (Air-Cooled Chiller Replacement)**

**Lump Sum Bid Price:** _____

_____Dollars ($_____)

INFORMATIONAL PRICE (Electrical) – List price of electrical subcontract. This price should be included in Base Bid and is listed here for information only.
List Price of Electrical Subcontract: _____

_____Dollars ($_____)

INFORMATIONAL PRICE (Temperature Controls) – List price of temperature controls subcontract. This price should be included in Base Bid and is listed here for information only.
List Price of Temperature Controls Subcontract: _____

_____Dollars ($_____)

**Subcontractors:** The Bidder proposed that his bid include the work of the subcontractors listed below. (Name, Address and Phone Number)

Insulation: _____

Test and Balance: _____

Electrical: _____

Other: _____

| | YES | NO |
|---|---|---|
| Does your company have a formal safety policy and your employees participate in safety training? | | |
| Upon request, would you be able to provide the County with a copy of your safety policy? | | |

***THIS PAGE IS MANDATORY***

***REFERENCES***

List three (3) references that you have done similar work, service or supplied similar products to within the last twelve (12) months (Only correct contact names and phone numbers will be acceptable).

Entity:

Address:

City, State, Zip Code:

Telephone Number:

Contact Person:

---

Entity:

Address:

City, State, Zip Code:

Telephone Number:

Contact Person:

---

Entity:

Address:

City, State, Zip Code:

Telephone Number:

Contact Person:

***THIS PAGE IS MANDATORY.***

**RUBBER STAMPED, FAXED, COPIED, OR TYPED SIGNATURE WILL DISQUALIFY YOUR BID MUST BE AN ORIGINAL SIGNATURE**

**CERTIFICATIONS**

Vendor certifies that it has not been barred from contracting with a unit of State or local government as a result of a violation of Section 33E-3 or 33E-4 of the Criminal Code of 1961, as amended. _____ Yes _____ No

Vendor certifies that it is aware that all contracts for the Construction of Public Works are subject to the Illinois Prevailing Wage Act (820 ILCS 130/1-12) _____ Yes No

Under penalties of perjury, I certify that _____is my correct Federal Taxpayer Identification Number. I am doing business as a (please check one):

___Individual
___Sole Proprietorship
___*Partnership
___**Corporation
___Not-for-Profit Corporation
___Medical and Health Care Services Provider Corporation
___Real Estate Agent
___Government Entity
___Tax Exempt Organization (IRC 501(a) only)
___Trust or Estate

*State full names, titles and addresses of all responsible principles and/or partners below;

Name: _____ Title: _____

Address: _____

Name: _____ Title: _____

Address: _____

Name: _____ Title: _____

Address: _____

Name: _____ Title: _____

Address: _____

Name: _____ Title: _____

Address: _____

**If needed please submit any additional sheets.**

## PROPOSER'S CERTIFICATION

I have carefully examined the Bid, Scope of Work, Specifications, and any other documents accompanying or made a part of this Bid.

I hereby propose to furnish the goods or services specified in the Bid. I agree that my proposal will remain firm for a period of up to 120 days in order to allow the County adequate time to evaluate the qualifications submitted.

I verify that all information contained in this proposal is truthful to the best of my knowledge and belief. I further certify that I am duly authorized to submit this Bid on behalf of the firm as its act and deed, and that the firm is ready, willing, and able to perform if awarded the contract.

I further certify, under oath, that this proposal is made without prior understanding, agreement, connection, discussion, or collusion with any other person, firm or corporation submitting a proposal for the same product or service. No officer, employee or agent of the County of McHenry or any other proposer is interested in said proposal and that the undersigned executed this Proposer's Certification with full knowledge and understanding of the matters therein contained and was duly authorized to do so.

**State of Incorporation _____

_____
(Individual - Partnership - Company - Corporation)

_____
(Business Address)

_____
(City, State and Zip Code)

_____
(By Printed Name and Signature) (Title)

_____
(Witness Signature) (Title)

_____
(Telephone No) (Fax No.)

_____
(Date)

*End of Document*